KECKLEY

COMPANY HISTORY

The Keckley Company has made a commitment to be the best, most reliable strainer and valve manufacturer and supplier in the industry. This dedication to quality and service started close to 100 years ago.

The Keckley Company, a family owned and operated business, was established in 1914 and operated out of Springfield, Illinois. Our business strategy focused on the development of basic principles in customer service and product quality. Through the application of these ideals, Keckley established itself as a viable and reputable industrial manufacturing source. Our initial production focus was on Steam and Liquid Control Equipment. Over time, we expanded our product line to meet the request of our rapidly growing customer base.

In 1955, Keckley moved into a new facility located in Skokie, Illinois that was better equipped to support the company's exponential growth strategy. Since then, the Keckley Company has emerged as the premier domestic strainer manufacturer and supplier in the industry.

INDUSTRIES SERVED:

- HVAC
- Commercial Construction
- Chemical
- Oil & Gas
- Iron & Steel Production
- Marine (U.S. Navy)
- Petroleum Production & Refining
- Power Generation
- Petrochemical Production
- Pulp & Paper
- Automotive
- Food & Beverage
- Water & Sewage
- U.S. Department of Defense

PRODUCTS:

- "Y" and Basket Strainers
- Duplex Strainers
- Fabricated Strainers
- Temporary Strainers
- Ball Valves
- Knife Gate Valves
- Check Valves
- Suction Diffusers
- Triple Duty Valves
- Float & Lever Valves
- Pressure Reducing Valves
- Diaphragm Valves
- Back Pressure Valves
- Pressure Relief Valves
- Drip Pan Elbows

KECKLEY

TERMS AND CONDITIONS OF SALE

PRICE QUOTATION

Written quotations are firm for a period of 30 days unless Seller indicates on the quotation a longer period. All orders placed by the Buyer from a published price list, written quotation or verbal quotation are subject to acceptance by the Keckley Company. All delivery dates are subject to prior sale.

PAYMENT

Unless otherwise noted on Seller's Invoice to Buyer's Purchase Order, payment shall be net cash 30 days after shipment from Seller to approved credit purchasers. Seller reserves the right to demand terms of payment different from those specified herein whenever it reasonably appears that the Buyer's financial condition requires such change, and may demand assurance of Buyer's ability to pay whenever it reasonably appears that such ability is in doubt. Seller may suspend production, shipment or delivery until it receives payment of all amounts, whether or not due, owing to Seller or until adequate arrangements for payments are made.

PACKAGING

Unless Buyer specifies in writing, material will be packed as Seller deems necessary for proper protection. Export shipments will be subject to an additional charge for special overseas shipping. Additional charges may also be imposed if packaging instructions/specifications are other than standard.

SHIPMENT

Routing and manner of shipment will be at Seller's discretion and may be insured at Buyer's expense, value to be stated at order price. The Seller does not accept standing general or blanket shipping instructions. Full shipping instructions must accompany each individual order. No claim for shortages will be allowed unless made in writing with (10) days of receipt of shipment. Claims for material damaged or lost in transit should be made to the carrier, as Seller's responsibility ceases on delivery to the carrier.

DELIVERY

Delivery and shipment dates are estimated dates only, and unless otherwise specified, schedules commence with the date the Seller receives authorization to proceed with the order and order is accepted into production. In estimating such dates, no allowance has been made for delays of carriers or delays from labor difficulties, shortages, strikes or stoppages of any sort, fires, accidents, failure or delay in obtaining materials or manufacturing facilities, acts of government affecting Seller directly or indirectly, bad weather, or any cause beyond our control or causes designated Acts of God or forces majeure by any court of law, and the estimated delivery date shall be extended accordingly.

Shipping schedules and statements as to the expected date of shipment by Seller represent Seller's best estimate and shipment in accordance with such estimate is not guaranteed. Seller is not liable for any frieght costs because of late delivery.

WARRANTY

Seller warrants all parts and assemblies are warranted to be free from defects in materials and workmanship for a period of one year from date of shipment from the Seller's plant. The Seller reserves the right to examine all parts or assemblies claimed to be defective to determine whether they are defective in material or workmanship. All parts or assemblies which are determined to be defective in either material or workmanship may, upon express authority of the Seller, be returned to the Seller's plant prepaid and will be repaired or replaced or credit allowed at the Seller's option. In no event shall the Seller be liable for consequential costs or damages. This warranty is expressly in lieu of all other warranties, expressed or implied and whether of merchantability or fitness. This warranty does not apply to parts or assemblies which have been subject to misuse, negligence or accident. Also, it does not apply if repairs, modifications or reconditioning work is undertaken without prior written approval of the Seller. The customer is required to examine all parts and assemblies immediately upon receipt of shipment and promptly notify the Seller of any defects or alleged defects of the parts and assemblies.

RETURNS

Returns must not be made without our written consent. Goods must in all cases be carefully handled, properly packed and shipped prepaid. Goods authorized for return are subject to a restocking charge. Restocking charges will be based upon our inspection which may include any charges for retesting, reconditioning or repainting as required. Seller reserves the right to refuse credit for unwanted fabricated items. Goods returned for repair will be subject to our evaluation and charges will be based upon replacement of parts and labor.

CANCELLATION

Any order of part thereof may be canceled by thepurchaser upon written notice to the Seller prior to 45 days before completion. Upon receipt of a cancellation notice, all work on the order or part thereof being cancelled will be stopped as promptly and as reasonably as possible, and the purchaser will be liable for a cancellation charge. This charge is calculated on the basis of established or quoted prices for all completed items and for the full cost incurred by the Seller up to the time of work stoppage plus 15% on incomplete items. In addition, there will be supplementary costs for packing and storing those items.

NOTE

We reserve the right to correct obvious clerical errors in quotations, invoice and other contracts.

TERMS

Net 30 days.

MINIMUM CHARGE

$35.00 (Net)

FREIGHT

All shipments are F.O.B. Skokie, IL.

KECKLEY

Ball Valves

Seal Welded

Style BVS2 2
Carbon Steel Technical Data 2200 PSI ¼" - 4" 3
316 Stainless Steel Technical Data 2160 PSI ¼" - 4" 3

Style BVSC 4
Carbon Steel Technical Data 2200 PSI ¼" - 2" 5
316 Stainless Steel Technical Data 2160 PSI ¼" - 2" 5

Style BVS3 6
Carbon Steel Technical Data 3705 PSI ¼" - 2" 7
316 Stainless Steel Technical Data 3600 PSI ¼" - 2" 7

Style BVS6 8
Carbon Steel Technical Data 6170 PSI ¼" - 2" 9
316 Stainless Steel Technical Data 6000 PSI ¼" - 2" 9

3-Piece Maintenance Design

Style BVM3 10
Carbon Steel Technical Data 1973 PSI ¼" - 2½" 11
316 Stainless Steel Technical Data 1920 PSI ¼" - 2½" 11

Unibody

Style BVF1 12
Carbon Steel 150# Technical Data 285 PSI ½" - 1" 13
Carbon Steel 300# Technical Data 740 PSI ½" - 1" 13
316 Stainless Steel 150# Technical Data 275 PSI ½" - 1" 13
316 Stainless Steel 300# Technical Data 720 PSI ½" - 1" 13

Style BVF1 14
Carbon Steel 150# Technical Data 285 PSI 1½" - 6" 15
Carbon Steel 300# Technical Data 740 PSI 1½" - 6" 15
316 Stainless Steel 150# Technical Data 275 PSI 1½" - 6" 15
316 Stainless Steel 300# Technical Data 720 PSI 1½" - 6" 15

Split-Body

Style BVF2 16
Carbon Steel 150# Technical Data 285 PSI 1½" - 8" 17
Carbon Steel 300# Technical Data 740 PSI 1½" - 6" 17
316 Stainless Steel 150# Technical Data 275 PSI 1½" - 8" 17
316 Stainless Steel 300# Technical Data 720 PSI 1½" - 6" 17

KECKLEY

Style BVS2

Ball Valve
Carbon Steel (ASTM A 216, Grade WCB)
Stainless Steel (ASTM A 351, Grade CF8M)

NPT Ends

Seal Welded High Pressure Ball Valve

APPLICATIONS

Industrial and Oil/Gas piping applications where the safety of seal welded construction is desired, the high flow capacity of full bore design is required, and operating pressures are 2160 PSIG or lower.

CONSTRUCTION

Keckley Style BVS2 seal welded high pressure ball valves are constructed from investment cast ASTM grade materials that are NACE MR0175 compliant. They are machined to exacting specifications. Full seal welding of body to tailpiece eliminates the possibility of the tailpiece unthreading, leaking or "blowing out" in service. All valves are shell and seat tested in accordance with API 598.

FEATURES

- Seal Welded Construction
- API 607 6th Edition Fire-Safe
- Full Port - All Sizes
- All Models are NACE MR0175 Compliant
- Elongated Packing Gland for Ease of Access When Automated
- Standard ISO Actuator Mounting Pads on All Sizes
- Standard Locking Stainless Steel Handles
- Electrically Grounded Ball and Stem
- Optional PEEK Seats for High Temp Services
- Optional Oval Handles

ORDERING

Reference ***How to Order BVS2 Ball Valves*** for building the Keckley Product Number.

WORKING PRESSURES - NON SHOCK

MATERIAL	MEDIA	¼" to 2"	8 mm to 50 mm
ASTM A 216, Grade WCB	W.O.G.	2220 PSI @ 100°F	15306 KPa @ 38°C
MATERIAL	**MEDIA**	**¼" to 2"**	**8 mm to 50 mm**
ASTM A 351, Grade CF8M	W.O.G.	2160 PSI @ 100°F	14893 KPa @ 38°C
MATERIAL	**MEDIA**	**2-½" to 3"**	**65 mm to 80 mm**
ASTM A 216, Grade WCB & ASTM A 351, Grade CF8M	W.O.G.	1500 PSI @ 100°F	10342 KPa @ 38°C
MATERIAL	**MEDIA**	**4"**	**100 mm**
ASTM A 216, Grade WCB & ASTM A 351, Grade CF8M	W.O.G.	1000 PSI @ 100°F	6895 KPa @ 38°C
MATERIAL	**MEDIA**	**¼" to 4"**	**8 mm to 100 mm**
ASTM A 216, Grade WCB & ASTM A 351, Grade CF8M	Saturated Steam (WSP)	200 PSI @ 388°F	1379 KPa @ 198°F

Note: Optional PEEK Seats WSP is 250 PSIG @ 406°F (1724 KPa @ 208°C)

KECKLEY

TECHNICAL DATA
DIMENSIONS AND WEIGHTS

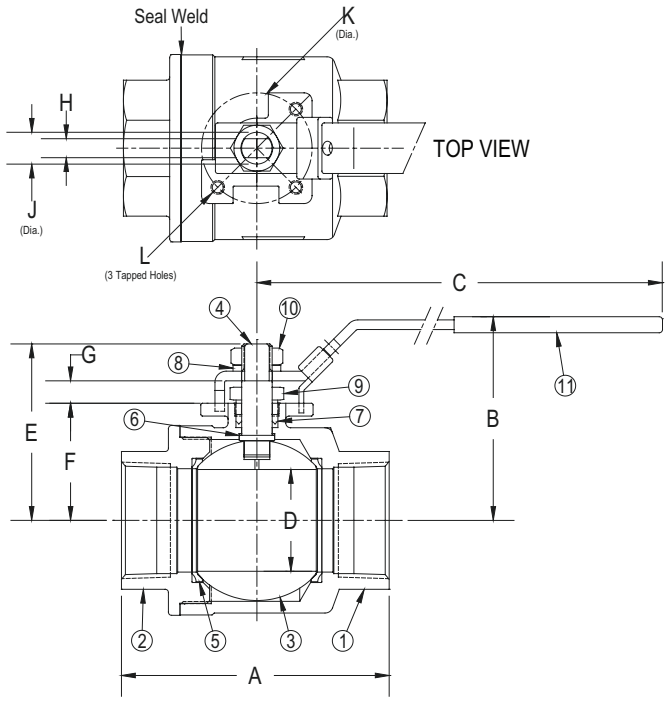

Style BVS2

Seal Welded High Pressure Ball Valve
NPT Ends

PARTS LIST			
ITEM	DESCRIPTION	MATERIAL	
1	Body	A 216 Gr. WCB	A 351 Gr. CF8M
2	Tailpiece	A 216 Gr. WCB	A 351 Gr. CF8M
3	Ball	A 276 Gr. 316	A 276 Gr. 316
4	Stem	A 276 Gr. 316	A 276 Gr. 316
5	Seat (2)†	R-PTFE	R-PTFE
6	Thrust Washer	R-PTFE	R-PTFE
7	Stem Packing	Graphite	Graphite
8	Spring Washer	304SS	304SS
9	Packing Gland	A 276 Gr. 316	A 276 Gr. 316
10	Lock Nut	304SS	304SS
11	Handle	300 Series SS	300 Series SS
	Pipe*	A 283, CS	A 283, CS
	Handle Bolt*	304SS	304SS
	Bolt*	304SS	304SS

*Parts referenced are for a 4" size only [Not Shown].
†Optional PEEK Seats for High Temp Service are available.

SIZE		DIMENSIONS														WEIGHTS	
		A		B		C		D		E		F		G			
in	mm	in	mm	in	mm	in	mm	in	mm	in	mm	in	mm	in	mm	lbs	kgs
1/4	8	2.6	66.0	2.2	55.9	5.1	129.5	0.43	11.0	1.53	38.86	0.92	23.37	0.21	5.33	1.0	0.5
3/8	10	2.6	66.0	2.2	55.9	5.1	129.5	0.43	11.0	1.53	38.86	0.92	23.37	0.21	5.33	1.0	0.5
1/2	15	2.6	66.0	2.2	55.9	5.1	129.5	0.50	12.7	1.53	38.86	0.92	23.37	0.21	5.33	1.0	0.5
3/4	20	2.9	73.7	2.8	71.1	5.7	144.8	0.81	20.5	2.26	57.40	1.30	33.02	0.37	9.40	1.7	0.8
1	25	3.4	86.4	3.0	76.2	5.7	144.8	1.00	25.4	2.49	63.25	1.47	37.34	0.41	10.41	2.7	1.2
1-1/4	32	3.8	96.5	3.6	91.4	7.3	185.4	1.25	31.8	2.92	74.17	1.77	44.96	0.44	11.18	3.9	1.8
1-1/2	40	4.3	109.2	3.8	96.5	7.8	198.1	1.50	38.1	3.18	80.77	2.02	51.31	0.44	11.18	5.9	2.7
2	50	4.8	121.9	4.4	111.8	7.8	198.1	2.00	50.0	3.64	92.46	2.38	60.45	0.55	13.97	9.5	4.3
2-1/2	65	6.5	165.1	5.0	127.0	13.9	353.1	2.50	63.5	4.33	109.98	2.88	73.15	0.55	13.97	17.0	7.7
3	80	7.2	182.9	5.4	137.2	13.9	353.1	3.00	76.0	4.73	120.14	3.27	83.06	0.55	13.97	25.1	11.4
4	100	8.4	213.4	7.3	185.4	18.0	457.2	4.00	100.0	5.94	150.88	4.63	117.60	0.55	13.97	44.1	20.0

SIZE		DIMENSIONS							
		H		J		K		L	ISO PATTERN
in	mm	in	mm	in	mm	in	mm	in	
1/4	8	0.20	5.08	0.31	7.87	1.42	36.0	1/4"-20 UNC	F03
3/8	10	0.20	5.08	0.31	7.87	1.42	36.0	1/4"-20 UNC	F03
1/2	15	0.20	5.08	0.31	7.87	1.42	36.0	1/4"-20 UNC	F03
3/4	20	0.28	7.11	0.44	11.18	1.65	42.0	1/4"-20 UNC	F04
1	25	0.28	7.11	0.44	11.18	1.65	42.0	1/4"-20 UNC	F04
1-1/4	32	0.35	8.89	0.56	14.22	1.97	50.0	1/4"-20 UNC	F05
1-1/2	40	0.35	8.89	0.56	14.22	1.97	50.0	1/4"-20 UNC	F05
2	50	0.35	8.89	0.56	14.22	1.97	50.0	1/4"-20 UNC	F05
2-1/2	65	0.47	11.94	0.75	19.05	2.76	70.0	5/16"-18 UNC	F07
3	80	0.47	11.94	0.75	19.05	2.76	70.0	5/16"-18 UNC	F07
4	100	0.67	17.02	1.03	26.16	2.76	70.0	5/16"-18 UNC	F07

Certified dimensional drawings are available upon request.
†This table reflects only the nearest metric equivalents.

PRESSURE vs. TEMPERATURE CHART

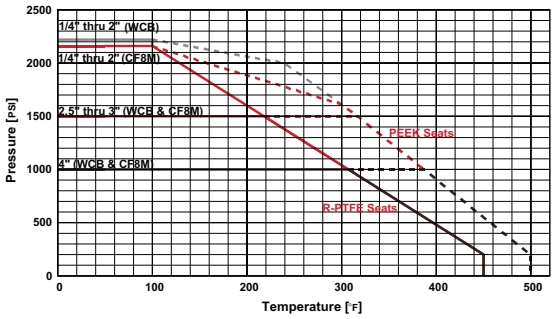

FLOW COEFFICIENTS

Size	C_v	Size	C_v	Size	C_v	Size	C_v
1/4"	10	3/4"	32	1-1/2"	140	3"	1100
3/8"	10	1"	62	2"	365	4"	2200
1/2"	18	1-1/4"	115	2-1/2"	450		

MAX TORQUE R-PTFE SEATS

Size	in/lb	Size	in/lb	Size	in/lb	Size	in/lb
1/4"	50	3/4"	120	1-1/2"	400	3"	1350
3/8"	50	1"	180	2"	600	4"	2200
1/2"	75	1-1/4"	300	2-1/2"	1050		

KECKLEY

Style BVSC

Ball Valve
Carbon Steel (ASTM A 216, Grade WCB)
Stainless Steel (ASTM A 351, Grade CF8M)

NPT or Socket Weld Ends

Seal Welded High Pressure Ball Valve

ASME B16.34 Class 900

APPLICATIONS

Industrial and Oil/Gas applications where ASME B16.34 and/or API 608 Class 900 construction are required, especially in piping systems that must be compliant with the ASME B31 Piping Codes. Also, in any application requiring API 607 6th Edition Fire Safe certification or NACE compliance.

CONSTRUCTION

Keckley Style BVSC seal welded ball valves are full ported and constructed in either CF8M or WCB body materials, both with 316ss ball and stem. They benefit from heavier ASME compliant wall thickness in body and tailpiece, and carry full ASME Class 900 pressure ratings. The handle-ball-stem drivetrain complies with API 608 strength and safety factor requirements, as do bore diameters, seat ratings, and electrical grounding of ball and stem.

FEATURES

- Seal Welded Construction
- Fully Compliant to ASME B16.34 Class 900
- Fully Compliant to API 608
- API 607 6th Edition Fire-Safe
- Full Port - All Sizes
- All Models are NACE MR0175 Compliant
- Elongated Packing Gland for Ease of Access When Automated
- Standard ISO Actuator Mounting Pads on All Sizes
- Standard Locking Stainless Steel Handles
- Electrically Grounded Ball and Stem
- Optional PEEK Seats for High Temp Services
- Optional Oval Handles

ORDERING

Reference ***How to Order BVSC Ball Valves*** for building the Keckley Product Number.

WORKING PRESSURES - NON SHOCK

MATERIAL	MEDIA	¼" to 2"	8 mm to 50 mm
ASTM A 216, Grade WCB	W.O.G.	2220 PSI @ 100°F	15306 KPa @ 38°C
MATERIAL	**MEDIA**	**¼" to 2"**	**8 mm to 50 mm**
ASTM A 351, Grade CF8M	W.O.G.	2160 PSI @ 100°F	14893 KPa @ 38°C

KECKLEY

TECHNICAL DATA
DIMENSIONS AND WEIGHTS

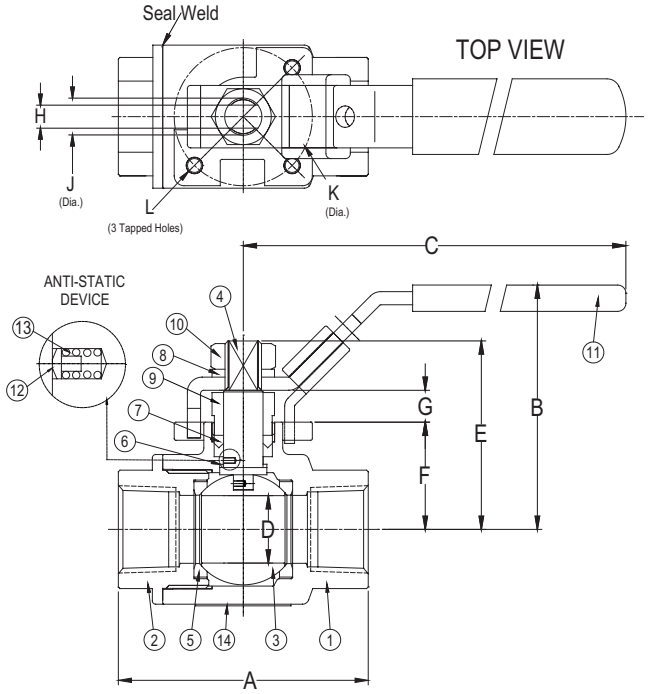

Style BVSC

Seal Welded High Pressure Ball Valve
NPT or Socket Weld Ends*

PARTS LIST			
ITEM	DESCRIPTION	MATERIAL	
1	Body	A 216 Gr. WCB	A 351 Gr. CF8M
2	Tailpiece	A 216 Gr. WCB	A 351 Gr. CF8M
3	Ball	A 276 Gr. 316	A 276 Gr. 316
4	Stem	A 276 Gr. 316	A 276 Gr. 316
5	Seat (2)†	R-PTFE	R-PTFE
6	Thrust Washer	R-PTFE	R-PTFE
7	Stem Packing	Graphite	Graphite
8	Spring Washer	304SS	304SS
9	Packing Gland	A 276 Gr. 316	A 276 Gr. 316
10	Lock Nut	304SS	304SS
11	Handle	300 Series SS	300 Series SS
12	Grounding Pin	316SS	316SS
13	Grounding Spring	304SS	304SS
14	Nameplate	304SS	304SS

*Note: Socket Weld Wnds require PEEK seats.
†Optional PEEK Seats for High Temp Service are available.

SIZE		DIMENSIONS														WEIGHTS	
		A		B		C		D		E		F		G			
in	mm	in	mm	in	mm	in	mm	in	mm	in	mm	in	mm	in	mm	lbs	kgs
1/4	8	2.7	68.6	2.2	55.9	5.1	129.5	0.43	11.0	1.53	38.86	0.92	23.37	0.21	5.33	1.0	0.5
3/8	10	2.7	68.6	2.2	55.9	5.1	129.5	0.43	11.0	1.53	38.86	0.92	23.37	0.21	5.33	1.0	0.5
1/2	15	2.7	68.6	2.2	55.9	5.1	129.5	0.50	12.7	1.53	38.86	0.92	23.37	0.21	5.33	1.0	0.5
3/4	20	3.0	76.2	2.8	71.1	5.7	144.8	0.81	20.5	2.26	57.40	1.30	33.02	0.37	9.40	2.0	0.9
1	25	3.7	94.0	3.1	78.7	5.7	144.8	1.00	25.4	2.49	63.25	1.47	37.34	0.41	10.41	3.7	1.7
1-1/4	32	4.0	101.6	3.6	91.4	7.3	185.4	1.25	31.8	2.92	74.17	1.77	44.96	0.44	11.18	4.7	2.1
1-1/2	40	4.5	114.3	3.8	96.5	7.8	198.1	1.50	38.1	3.18	80.77	2.02	51.31	0.48	12.19	6.7	3.0
2	50	5.0	127.0	4.4	111.8	7.8	198.1	2.00	50.0	3.64	92.46	2.38	60.45	0.55	13.97	11.1	5.0

Certified dimensional drawings are available upon request.
†This table reflects only the nearest metric equivalents.

SIZE		DIMENSIONS							
		H		J		K		L	ISO PATTERN
in	mm	in	mm	in	mm	in	mm	in	
1/4	8	0.20	5.08	0.31	7.87	1.42	36.0	1/4"-20 UNC	F03
3/8	10	0.20	5.08	0.31	7.87	1.42	36.0	1/4"-20 UNC	F03
1/2	15	0.20	5.08	0.31	7.87	1.42	36.0	1/4"-20 UNC	F03
3/4	20	0.28	7.11	0.44	11.18	1.65	42.0	1/4"-20 UNC	F04
1	25	0.28	7.11	0.44	11.18	1.65	42.0	1/4"-20 UNC	F04
1-1/4	32	0.35	8.89	0.56	14.22	1.97	50.0	1/4"-20 UNC	F05
1-1/2	40	0.35	8.89	0.56	14.22	1.97	50.0	1/4"-20 UNC	F05
2	50	0.35	8.89	0.56	14.22	1.97	50.0	1/4"-20 UNC	F05

Certified dimensional drawings are available upon request.
†This table reflects only the nearest metric equivalents.

PRESSURE vs. TEMPERATURE CHART

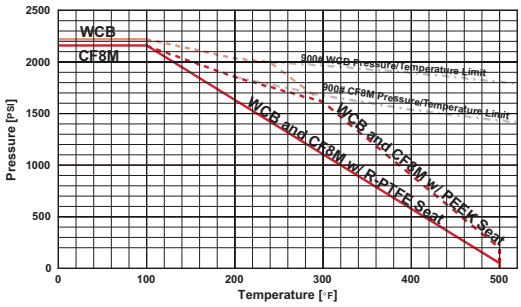

FLOW COEFFICIENTS

Size	C_v	Size	C_v	Size	C_v
1/4"	10	3/4"	32	1-1/2"	140
3/8"	10	1"	62	2"	365
1/2"	18	1-1/4"	115		

MAX TORQUE

Size	in/lb	Size	in/lb	Size	in/lb
1/4"	50	3/4"	120	1-1/2"	400
3/8"	50	1"	180	2"	600
1/2"	75	1-1/4"	300		

KECKLEY

Style BVS3

Ball Valve
Carbon Steel (ASTM A 216, Grade WCB)
Stainless Steel (ASTM A 351, Grade CF8M)

NPT or Socket Weld Ends

Seal Welded High Pressure Ball Valve

APPLICATIONS

Industrial and Oil/Gas piping applications where the safety of seal welded construction is desired, any application that requires ASME B16.34 Class 1500 compliance and/or compliance with API 608, and operating pressures are 3600 PSIG or lower.

CONSTRUCTION

Keckley Style BVS3 seal welded high pressure ball valves are constructed from investment cast ASTM grade materials that are NACE MR0175 compliant. They are machined to exacting specifications. Full seal welding of body to tailpiece eliminates the possibility of the tailpiece unthreading, leaking or "blowing out" in service. All valves are shell and seat tested in accordance with API 598. ASME B16.34 Class 1500 compliance provides full conformance to ASME B31 Piping Codes.

FEATURES

- Seal Welded Construction
- Fully Compliant to ASME B16.34 Class 1500
- Fully Compliant to API 608
- API 607 6th Edition Fire-Safe
- Full and Reduced Port Sizes are available
- All Models are NACE MR0175 Compliant
- Elongated Packing Gland for Ease of Access When Automated
- Standard ISO Actuator Mounting Pads on All Sizes
- Standard Locking Stainless Steel Handles
- Electrically Grounded Stem
- Optional PEEK Seats for High Temp Services

ORDERING

Reference ***How to Order BVS3 Ball Valves*** for building the Keckley Product Number.

WORKING PRESSURES - NON SHOCK

MATERIAL	MEDIA	¼" to 2"	8 mm to 50 mm
ASTM A 216, Grade WCB	W.O.G.	3705 PSI @ 100°F	15306 KPa @ 38°C
	Saturated Steam (WSP)	Delrin AF Seats No Steam Rating	Delrin AF Seats No Steam Rating
		Optional PEEK Seats 250 PSI @ 406°F	Optional PEEK Seats 1724 KPa @ 208°C
MATERIAL	**MEDIA**	**¼" to 2"**	**8 mm to 50 mm**
ASTM A 351, Grade CF8M	W.O.G.	3600 PSI @ 100°F	24821 KPa @ 38°C
	Saturated Steam (WSP)	Delrin AF Seats No Steam Rating	Delrin AF Seats No Steam Rating
		Optional PEEK Seats 250 PSI @ 406°F	Optional PEEK Seats 1724 KPa @ 208°C

Note: Optional PEEK Seats WSP is 250 PSIG @ 406°F (1724 KPa @ 208°C)

KECKLEY

TECHNICAL DATA
DIMENSIONS AND WEIGHTS

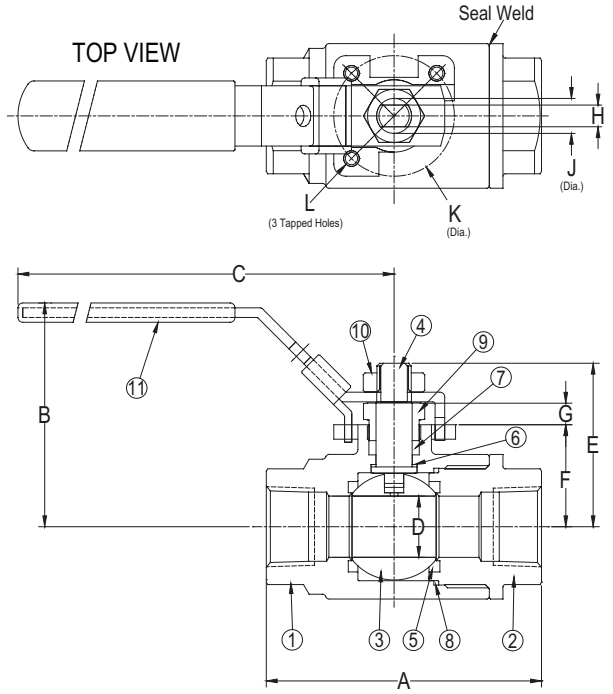

Style BVS3

Seal Welded High Pressure Ball Valve
NPT or Socket Weld Ends*

PARTS LIST			
ITEM	DESCRIPTION	MATERIAL	
1	Body	A 216 Gr. WCB	A 351 Gr. CF8M
2	Tailpiece	A 216 Gr. WCB	A 351 Gr. CF8M
3	Ball	A 276 Gr. 316	A 276 Gr. 316
4	Stem*	A 276 Gr. 316	A 276 Gr. 316
5	Seat (2)†	Delrin AF	Delrin AF
6	Thrust Washer	Delrin AF	Delrin AF
7	Stem Packing	Graphite	Graphite
8	Body Seal	Graphite	Graphite
9	Packing Gland	A 276 Gr. 316	A 276 Gr. 316
10	Lock Nut	304SS	304SS
11	Handle	300 Series SS	300 Series SS

*Note: Socket Weld Ends require PEEK seats.
**Size 1-1/2" & 2" S17400 SS.
†Optional PEEK Seats for High Temp Service are available.

SIZE		DIMENSIONS														WEIGHTS	
		A		B		C		D		E		F		G			
in (Port)	mm	in	mm	in	mm	in	mm	in	mm	in	mm	in	mm	in	mm	lbs	kgs
1/4 (FP)	8	3.0	76.2	2.4	61.0	5.1	129.6	0.25	6.4	1.63	41.41	0.89	22.61	0.42	10.67	1.6	0.7
3/8 (RP)	10	3.0	76.2	2.4	61.0	5.1	129.6	0.25	6.4	1.63	41.41	0.89	22.61	0.42	10.67	1.6	0.7
1/2 (FP)	15	4.0	101.6	2.4	61.0	5.1	129.6	0.50	12.7	1.63	41.41	0.89	22.61	0.42	10.67	1.8	0.8
3/4 (FP)	20	4.3	109.3	3.0	76.2	5.6	142.3	0.75	19.1	2.22	56.39	1.29	32.77	0.42	10.67	3.1	1.4
1 (RP)	25	4.3	109.3	3.0	76.2	5.6	142.3	0.75	19.1	2.22	56.39	1.29	32.77	0.42	10.67	2.9	1.3
1 (FP)	32	4.5	114.3	3.5	88.9	7.4	188.0	1.00	25.4	2.80	71.12	1.65	41.91	0.43	10.93	4.4	2.0
1-1/2 (FP)	40	5.3	134.7	4.6	116.9	14.0	355.6	1.50	38.1	3.87	98.30	2.49	63.25	0.52	13.21	10.9	4.9
2 (RP)	50	6.3	160.1	4.6	116.9	14.0	355.6	1.50	38.1	3.87	98.30	2.49	63.25	0.52	13.21	12.3	5.6

Certified dimensional drawings are available upon request.
†This table reflects only the nearest metric equivalents.

SIZE		DIMENSIONS							
		H		J		K		L	ISO PATTERN
in (Port)	mm	in	mm	in	mm	in	mm	in	
1/4 (FP)	8	0.20	5.08	0.31	7.88	1.42	36.0	1/4"-20 UNC	F03
3/8 (RP)	10	0.20	5.08	0.31	7.88	1.42	36.0	1/4"-20 UNC	F03
1/2 (FP)	15	0.20	5.08	0.31	7.88	1.42	36.0	1/4"-20 UNC	F03
3/4 (FP)	20	0.28	7.12	0.44	11.18	1.65	42.0	1/4"-20 UNC	F04
1 (RP)	25	0.28	7.12	0.44	11.18	1.65	42.0	1/4"-20 UNC	F04
1 (FP)	32	0.35	8.89	0.56	14.23	1.97	50.0	1/4"-20 UNC	F05
1-1/2 (FP)	40	0.39	9.91	0.62	15.75	2.76	70.0	5/16"-18 UNC	F07
2 (RP)	50	0.39	9.91	0.62	15.75	2.76	70.0	5/16"-18 UNC	F07

Certified dimensional drawings are available upon request.
†This table reflects only the nearest metric equivalents.

PRESSURE vs. TEMPERATURE CHART

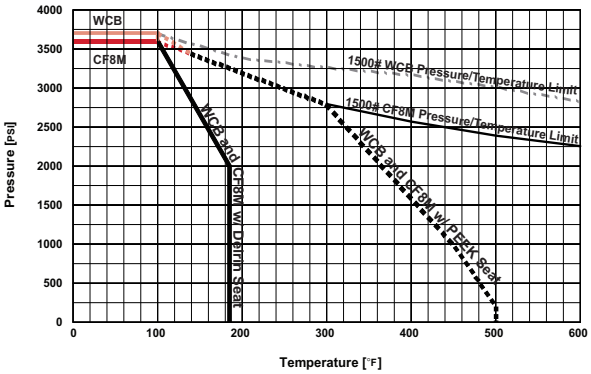

FLOW COEFFICIENTS

Size (Port)	C_v	Size (Port)	C_v	Size (Port)	C_v
1/4" (FP)	10	3/4" (FP)	32	1-1/2" (FP)	140
3/8" (RP)	10	1" (RP)	45	2" (RP)	125
1/2" (FP)	16	1" (FP)	65		

MAX TORQUE

Size (Port)	in/lb (Delrin AF)	in/lb (PEEK)	Size (Port)	in/lb (Delrin AF)	in/lb (PEEK)	Size (Port)	in/lb (Delrin AF)	in/lb (PEEK)
1/4" (FP)	75	100	3/4" (FP)	120	270	1-1/2" (FP)	750	1200
3/8" (RP)	75	100	1" (RP)	200	270	2" (RP)	750	1200
1/2" (FP)	75	100	1" (FP)	400	700			

KECKLEY

Style BVS6

Ball Valve
Carbon Steel (ASTM A 216, Grade WCB)
Stainless Steel (ASTM A 351, Grade CF8M)

NPT or Socket Weld Ends

Seal Welded High Pressure Ball Valve

APPLICATIONS

Industrial and Oil/Gas piping applications where the safety of seal welded construction is desired, any application that requires ASME B16.34 Class 2500 compliance and/or compliance with API 608, and operating pressures are 6000 PSIG or lower.

CONSTRUCTION

Keckley Style BVS6 seal welded high pressure ball valves are constructed from investment cast ASTM grade materials that are NACE MR0175 compliant. They are machined to exacting specifications. Full seal welding of body to tailpiece eliminates the possibility of the tailpiece unthreading, leaking or "blowing out" in service. All valves are shell and seat tested in accordance with API 598. ASME B16.34 Class 2500 compliance provides full conformance to ASME B31 Piping Codes.

FEATURES

- Seal Welded Construction
- Fully Compliant to ASME B16.34 Class 2500
- Fully Compliant to API 608
- API 607 6th Edition Fire-Safe
- Full and Reduced Port Sizes are available
- All Models are NACE MR0175 Compliant
- Elongated Packing Gland for Ease of Access When Automated
- Standard ISO Actuator Mounting Pads on All Sizes
- Standard Locking Stainless Steel Handles
- Electrically Grounded Stem
- Optional PEEK Seats for High Temp Services

ORDERING

Reference ***How to Order BVS6 Ball Valves*** for building the Keckley Product Number.

WORKING PRESSURES - NON SHOCK

MATERIAL	MEDIA	¼" to 2"	8 mm to 50 mm
ASTM A 216, Grade WCB	W.O.G.	6170 PSI @ 100°F	42541 KPa @ 38°C
	Saturated Steam (WSP)	250 PSI @ 406°F	1724 KPa @ 208°C
MATERIAL	**MEDIA**	**¼" to 2"**	**8 mm to 50 mm**
ASTM A 351, Grade CF8M	W.O.G.	6000 PSI @ 100°F	41369 KPa @ 38°C
	Saturated Steam (WSP)	250 PSI @ 406°F	1724 KPa @ 208°C

KECKLEY

TECHNICAL DATA
DIMENSIONS AND WEIGHTS

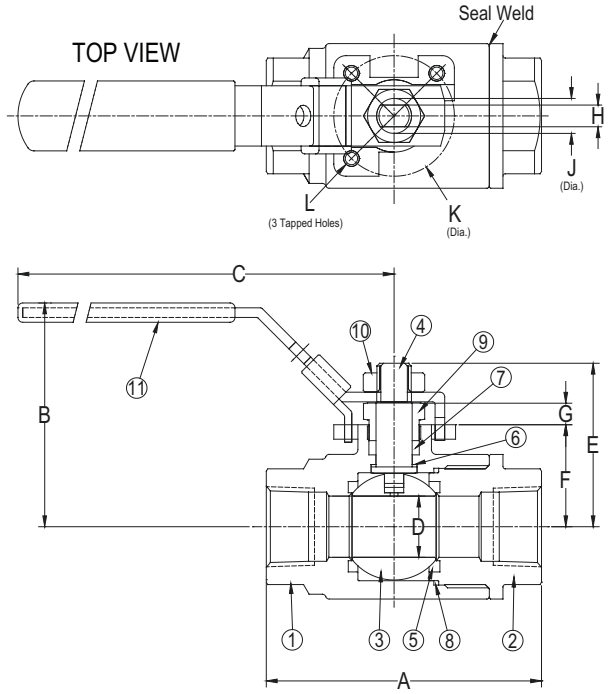

Style BVS6

Seal Welded High Pressure Ball Valve
NPT or Socket Weld Ends.

PARTS LIST			
ITEM	DESCRIPTION	MATERIAL	
1	Body	A 216 Gr. WCB	A 351 Gr. CF8M
2	Tailpiece	A 216 Gr. WCB	A 351 Gr. CF8M
3	Ball	A 276 Gr. 316	A 276 Gr. 316
4	Stem	S17400 SS	S17400 SS
5	Seat (2)	PEEK	PEEK
6	Thrust Washer	PEEK	PEEK
7	Stem Packing	Graphite	Graphite
8	Body Seal	Graphite	Graphite
9	Packing Gland	A 276 Gr. 316	A 276 Gr. 316
10	Lock Nut	304SS	304SS
11	Handle	300 Series SS	300 Series SS

SIZE		DIMENSIONS														WEIGHTS	
		A		B		C		D		E		F		G			
in (Port)	mm	in	mm	in	mm	in	mm	in	mm	in	mm	in	mm	in	mm	lbs	kgs
1/4 (FP)	8	3.0	76.2	2.4	61.0	5.1	129.6	0.25	6.4	1.63	41.41	0.89	22.61	0.42	10.67	1.7	0.8
3/8 (RP)	10	3.0	76.2	2.4	61.0	5.1	129.6	0.25	6.4	1.63	41.41	0.89	22.61	0.42	10.67	1.7	0.8
1/2 (FP)	15	4.0	101.6	2.4	61.0	5.1	129.6	0.50	12.7	1.63	41.41	0.89	22.61	0.42	10.67	2.1	1.0
3/4 (FP)	20	4.3	109.3	3.0	76.2	5.6	142.3	0.75	19.1	2.22	56.39	1.29	32.77	0.42	10.67	3.5	1.6
1 (RP)	25	4.3	109.3	3.0	76.2	5.6	142.3	0.75	19.1	2.22	56.39	1.29	32.77	0.42	10.67	4.0	1.8
1 (FP)	32	4.5	114.3	3.5	88.9	7.4	188.0	1.00	25.4	2.80	71.12	1.65	41.91	0.43	10.93	6.0	2.7
1-1/2 (FP)	40	5.3	134.7	4.6	116.9	14.0	355.6	1.50	38.1	3.87	98.30	2.47	62.74	0.54	13.72	13.7	6.2
2 (RP)	50	6.3	160.1	4.6	116.9	14.0	355.6	1.50	38.1	3.87	98.30	2.47	62.74	0.54	13.72	16.5	7.5

Certified dimensional drawings are available upon request.
†This table reflects only the nearest metric equivalents.

SIZE		DIMENSIONS							
		H		J		K		L	ISO PATTERN
in (Port)	mm	in	mm	in	mm	in	mm	in	
1/4 (FP)	8	0.20	5.08	0.31	7.88	1.42	36.0	1/4"-20 UNC	F03
3/8 (RP)	10	0.20	5.08	0.31	7.88	1.42	36.0	1/4"-20 UNC	F03
1/2 (FP)	15	0.20	5.08	0.31	7.88	1.42	36.0	1/4"-20 UNC	F03
3/4 (FP)	20	0.28	7.12	0.44	11.18	1.65	42.0	1/4"-20 UNC	F04
1 (RP)	25	0.28	7.12	0.44	11.18	1.65	42.0	1/4"-20 UNC	F04
1 (FP)	32	0.35	8.89	0.56	14.23	1.97	50.0	1/4"-20 UNC	F05
1-1/2 (FP)	40	0.39	9.91	0.62	15.75	2.76	70.0	5/16"-18 UNC	F07
2 (RP)	50	0.39	9.91	0.62	15.75	2.76	70.0	5/16"-18 UNC	F07

Certified dimensional drawings are available upon request.
†This table reflects only the nearest metric equivalents.

PRESSURE vs. TEMPERATURE CHART

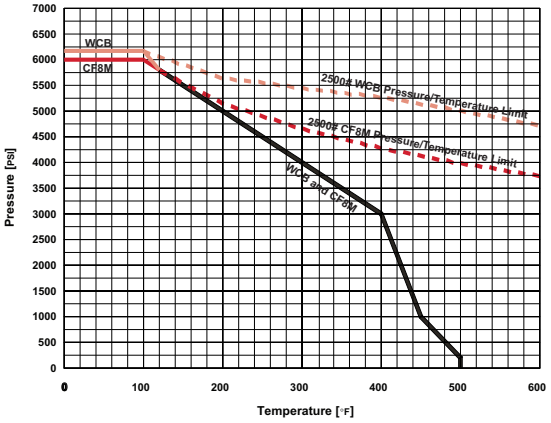

FLOW COEFFICIENTS

Size (Port)	C_v	Size (Port)	C_v	Size (Port)	C_v
1/4" (FP)	10	3/4" (FP)	32	1-1/2" (FP)	140
3/8" (RP)	10	1" (RP)	45	2" (RP)	125
1/2" (FP)	16	1" (FP)	65		

MAX TORQUE

Size (Port)	in/lb	Size (Port)	in/lb	Size (Port)	in/lb
1/4" (FP)	100	3/4" (FP)	270	1-1/2" (FP)	1200
3/8" (RP)	100	1" (RP)	270	2" (RP)	1200
1/2" (FP)	130	1" (FP)	700		

KECKLEY

Style BVM3

Ball Valve
Carbon Steel (ASTM A 216, Grade WCB)
Stainless Steel (ASTM A 351, Grade CF8M)

NPT, Socket Weld, Butt Weld, Extended Socket Weld and Extended Butt Weld Ends

3-Piece Maintenance Design Ball Valve

APPLICATIONS

Industrial and Oil/Gas piping applications where 3-Piece construction is desired/required to facilitate future maintenance and repair, weld-in applications requiring valve disassembly to protect internal components during the welding process, and applications that require ASME B16.34 and API 608 compliance leading to ASME B31.1 and B31.3 Code Compliance.

CONSTRUCTION

Keckley Style BVM3 3-Piece Maintenance Design Ball Valves employ investment cast ASTM Grade materials that are properly heat-treated and chemically finished to insure proper corrosion resistance, strength and NACE MR0175 compliance. The BVM3 series body bolts and threaded body center section insures superior body seal retention/sealing under high piping stress and elevated temperature applications. All sizes comply with ASME B16.34 and API 608 Standards for Class 800 service. Available extended socket weld and butt weld ends allow welding into the piping without disassembly. Each valve is tested to API 598, and all valves comply with API 607 6th Edition for Fire-Safe performance.

FEATURES

- 3-Piece Maintenance Design
- ASME B16.34 Class 800 Compliant
- API 608 Class 800 Compliant
- API 607 6th Edition Fire-Safe
- ¼" - 2" Full Port and ½" - 2-½" Reduced Port Sizes Available
- All Models are NACE MR0175 Compliant
- Extended Packing Adjustment Nut for ease of adjustment
- ISO 5211 Actuator Mounting Pads on All Sizes
- Standard Locking Stainless Steel Handles
- Electrically Grounded Stem
- Optional PEEK Seats for Elevated Temperature Services
- Optional Locking Stainless Steel Oval Handles
- Extended Topworks Available

ORDERING

Reference ***How to Order BVM3 Ball Valves*** for building the Keckley Product Number.

WORKING PRESSURES - NON SHOCK

MATERIAL	MEDIA	¼" to 2-½"	8 mm to 65 mm
ASTM A 216, Grade WCB	W.O.G.	1973 PSI @ 100°F	13603 KPa @ 38°C
MATERIAL	**MEDIA**	**¼" to 2-½"**	**8 mm to 65 mm**
ASTM A 351, Grade CF8M	W.O.G.	1920 PSI @ 100°F	13238 KPa @ 38°C
MATERIAL	**MEDIA**	**¼" to 2-½"**	**8 mm to 65 mm**
ASTM A 216, Grade WCB & ASTM A 351, Grade CF8M	Saturated Steam (WSP)	250 PSI @ 406°F	1724 KPa @ 208°C

KECKLEY

TECHNICAL DATA
DIMENSIONS AND WEIGHTS

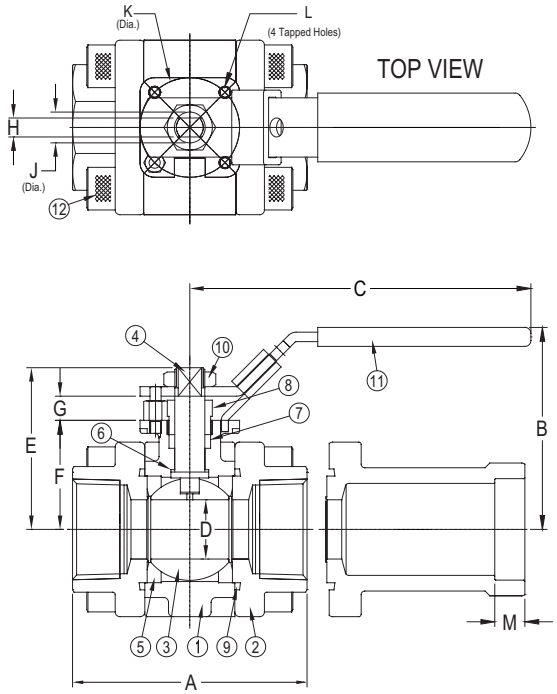

Style BVM3

3-Piece Maintenance Design Ball Valve
NPT, Socket Weld, or Butt Weld Ends.

PARTS LIST			
ITEM	DESCRIPTION	MATERIAL	
1	Body	A 216 Gr. WCB	A 351 Gr. CF8M
2	Tailpiece (2)	A 216 Gr. WCB	A 351 Gr. CF8M
3	Ball	A 276 Gr. 316	A 276 Gr. 316
4	Stem	A 276 Gr. 316	A 276 Gr. 316
5	Seat (2)†	R-PTFE	R-PTFE
6	Thrust Washer	R-PTFE	R-PTFE
7	Stem Packing	Graphite	Graphite
8	Body Seal (2)	Graphite	Graphite
9	Packing Gland	A 276 Gr. 316	A 276 Gr. 316
10	Lock Nut	304SS	304SS
11	Handle	300 Series SS	300 Series SS
12	Body Bolts (8)	A 193, Grade B7	A 193, Grade B8

†Optional PEEK Seats for High Temp Service are available.

SIZE		DIMENSIONS													
		A NPT OR SW		A EXTENDED SW		B	C	D	E	F	G	H	J	K	L
Reduced Port	Full Port	Reduced Port	Full Port	Reduced Port	Full Port										
1/2	1/4, 3/8	2.7	2.7	6.0	N/A	2.5	4.3	0.43	1.71	1.08	0.31	0.197	0.31	1.42	1/4"-20 UNC
3/4	1/2	3.0	2.8	7.0	7.0	2.6	4.3	0.57	1.83	1.24	0.31	0.197	0.31	1.42	1/4"-20 UNC
1	3/4	3.5	3.2	7.5	7.5	3.0	5.7	0.81	2.34	1.50	0.37	0.276	0.44	1.65	1/4"-20 UNC
1-1/4	1	3.9	3.8	8.0	8.0	3.4	5.8	1.00	2.69	1.81	0.40	0.315	0.50	1.65	1/4"-20 UNC
1-1/2	1-1/4	4.5	4.3	8.0	8.0	3.7	7.5	1.25	2.91	1.95	0.43	0.394	0.62	1.97	1/4"-20 UNC
2	1-1/2	5.0	4.8	9.0	9.0	3.9	7.5	1.50	3.15	2.26	0.35	0.394	0.62	1.97	1/4"-20 UNC
2-1/2	2	6.9	5.7	N/A	10.0	5.3	11.7	2.00	4.37	3.11	0.49	0.472	0.75	2.76	5/16"-18 UNC

Certified dimensional drawings are available upon request.
†This table reflects only the nearest metric equivalents.

SIZE		DIMENSIONS			WEIGHT (lbs)	FLOW COEFFICIENTS		MAX TORQUE
		M		ISO PATTERN		C_V		
Reduced Port	Full Port	Reduced Port	Full Port			Reduced Port	Full Port	in/lb
1/2	1/4, 3/8	0.38	N/A	F03	1.7	10	10	100
3/4	1/2	0.50	0.38	F03	2.2	25	22	200
1	3/4	0.50	0.50	F04	3.8	42	40	230
1-1/4	1	0.50	0.50	F04	5.1	55	62	250
1-1/2	1-1/4	0.50	0.50	F05	7.1	85	115	380
2	1-1/2	0.62	0.50	F05	9.8	120	140	520
2-1/2	2	N/A	0.62	F07	20.8	300	360	660

Certified dimensional drawings are available upon request.
†This table reflects only the nearest metric equivalents.

PRESSURE vs. TEMPERATURE CHART

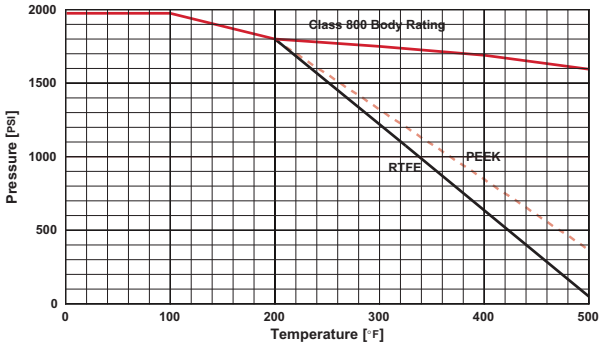

KECKLEY

Style BVF1

Ball Valve
Carbon Steel (ASTM A 216, Grade WCB)
150 lb. & 300 lb. Flanged

Stainless Steel (ASTM A 351, Grade CF8M)
150 lb. & 300 lb. Flanged

Unibody Flanged Ball Valve 1/2" - 1"

APPLICATIONS

Industrial and Oil/Gas piping applications requiring ASME Class 150 or 300 flanged end ball valves with one-piece body construction.

CONSTRUCTION

The Keckley Style BVF1 Unibody flanged end ball valves are constructed from rugged investment castings that are machined to exacting specifications. Unibody construction provides high structural strength and minimizes external leak paths.

FEATURES

- Unibody Construction
- Fully Compliant to ASME B16.34
- Fully Compliant to API 608
- API 607 6th Edition Fire-Safe
- All Models are NACE MR0175 Compliant
- Elongated Packing Gland for Ease of Access When Automated
- Standard ISO Actuator Mounting Pads on All Sizes
- Standard Locking Stainless Steel Handles
- Second Generation PTFE Seats Provide Higher Operating Temperatures
- Standard Electrically Grounded Ball & Stem
- Optional Oval Handles

ORDERING

Reference ***How to Order BVF1 Ball Valves*** for building the Keckley Product Number.

WORKING PRESSURES - NON SHOCK

NOM. RATING	MATERIAL	MEDIA	½" to 1"	15 mm to 25 mm
ASME CLASS 150	A 216, WCB	W.O.G.	285 PSI @ 100°F	1965 KPa @ 38°C
		Saturated Steam (WSP)	200 PSI @ 388°F	1379 KPa @ 198°C
	MATERIAL	**MEDIA**	**½" to 1"**	**15 mm to 25 mm**
	A 351, CF8M	W.O.G.	275 PSI @ 100°F	1896 KPa @ 38°C
		Saturated Steam (WSP)	195 PSI @ 386°F	1344 KPa @ 197°C
NOM. RATING	**MATERIAL**	**MEDIA**	**½" to 1"**	**15 mm to 25 mm**
ASME CLASS 300	A 216, WCB	W.O.G.	740 PSI @ 100°F	5102 KPa @ 38°C
		Saturated Steam (WSP)	250 PSI @ 406°F	1724 KPa @ 208°C
	MATERIAL	**MEDIA**	**½" to 1"**	**15 mm to 25 mm**
	A 351, CF8M	W.O.G.	720 PSI @ 100°F	4964 KPa @ 38°C
		Saturated Steam (WSP)	250 PSI @ 406°F	1724 KPa @ 208°C

KECKLEY

TECHNICAL DATA
DIMENSIONS AND WEIGHTS

Style BVF1

Unibody Flanged Ball Valve

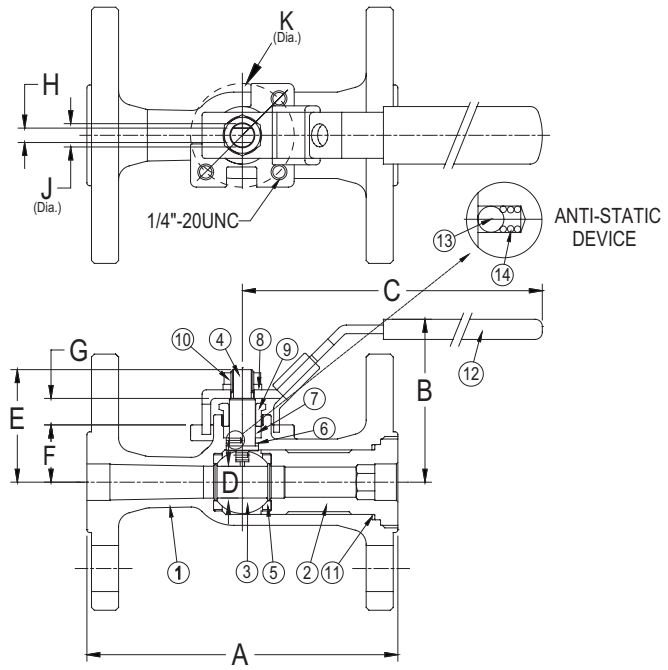

PARTS LIST			
ITEM	DESCRIPTION	MATERIAL	
1	Body	A 216, WCB	A 351, CF8M
2	Tailpiece	A 216, WCB	A 351, CF8M
3	Ball	A 351, CF8M or 316SS	A 351, CF8M or 316SS
4	Stem	A 276, 316	A 276, 316
5	Seat (2)	R-PTFE	R-PTFE
6	Thrust Washer	PTFE	PTFE
7	Stem Packing	Graphite	Graphite
8	Lock Washer	304SS	304SS
9	Packing Gland	A 276, 316	A 276, 316
10	Lock Nut	304SS	304SS
11	Body Gasket	Graphite	Graphite
12	Handle Assembly	300 Series SS	300 Series SS
13	Grounding Ball (2)	304SS	304SS
14	Grounding Spring (2)	304SS	304SS

SIZE		DIMENSIONS															
		A				B		C		D		E		F		G	
		150 lb.		300 lb.		150 lb. & 300 lb.		150 lb. & 300 lb.		150 lb. & 300 lb.		150 lb. & 300 lb.		150 lb. & 300 lb.		150 lb. & 300 lb.	
in	mm	in	mm	in	mm	in	mm	in	mm	in	mm	in	mm	in	mm	in	mm
1/2	15	4.25	108.0	5.50	139.7	2.21	56.1	5.04	128.01	0.43	10.92	1.53	38.86	0.78	19.81	0.350	8.89
3/4	20	4.62	117.3	6.00	152.4	2.72	69.1	5.63	143.00	0.59	15.00	2.06	52.32	1.03	26.16	0.425	10.80
1	25	5.00	127.0	6.50	165.1	2.98	75.7	5.63	143.00	0.81	20.57	2.33	59.18	1.33	33.78	0.402	10.21

Certified dimensional drawings are available upon request.
†This table reflects only the nearest metric equivalents.

SIZE		DIMENSIONS							WEIGHTS			
		H		J		K		ISO PATTERN				
		150 lb. & 300 lb.		150 lb. & 300 lb.		150 lb. & 300 lb.			150 lb.		300 lb.	
in	mm	in	mm	in	mm	in	mm		lbs	kgs	lbs	kgs
1/2	15	0.20	5.08	0.31	7.87	1.42	36.0	F03	2.7	1.2	4.7	2.1
3/4	20	0.28	7.11	0.44	11.18	1.65	42.0	F04	4.3	2.0	7.2	3.3
1	25	0.28	7.11	0.44	11.18	1.65	42.0	F04	5.7	2.6	8.1	3.7

Certified dimensional drawings are available upon request.
†This table reflects only the nearest metric equivalents.

FLOW COEFFICIENTS

Size	C_v	Size	C_v	Size	C_v
1/2"	16	3/4"	27	1"	42

MAX TORQUE

Size	in/lb	Size	in/lb	Size	in/lb
1/2"	100	3/4"	130	1"	150

PRESSURE vs. TEMPERATURE CHART

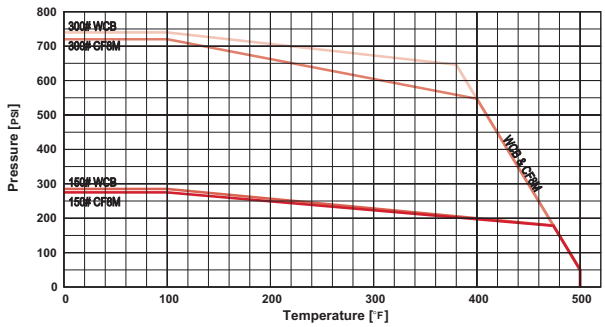

KECKLEY

Style BVF1

Ball Valve
Carbon Steel (ASTM A 216, Grade WCB)
150 lb. & 300 lb. Flanged

Stainless Steel (ASTM A 351, Grade CF8M)
150 lb. & 300 lb. Flanged

Unibody Flanged Ball Valve
1-1/2" - 6"

APPLICATIONS

Industrial and Oil/Gas piping applications requiring ASME Class 150 or 300 flanged end ball valves with one-piece body construction.

CONSTRUCTION

The Keckley Style BVF1 Unibody flanged end ball valves are constructed from rugged investment castings that are machined to exacting specifications. Unibody construction provides high structural strength and minimizes external leak paths.

FEATURES

- Unibody Construction
- Fully Compliant to ASME B16.34
- Fully Compliant to API 608
- API 607 6th Edition Fire-Safe
- All Models are NACE MR0175 Compliant
- Submerged Packing System & Direct-Mount Actuation
- Standard ISO Actuator Mounting Pads on All Sizes
- Standard Locking Stainless Steel Handles
- Second Generation PTFE Seats Provide Higher Operating Temperatures
- Standard Electrically Grounded Ball & Stem

ORDERING

Reference ***How to Order BVF1 Ball Valves*** for building the Keckley Product Number.

WORKING PRESSURES - NON SHOCK

NOM. RATING	MATERIAL	MEDIA	1-½" to 6"	40 mm to 150 mm
ASME CLASS 150	A 216, WCB	W.O.G.	285 PSI @ 100°F	1965 KPa @ 38°C
		Saturated Steam (WSP)	200 PSI @ 388°F	1379 KPa @ 198°C
	MATERIAL	**MEDIA**	**1-½" to 6"**	**40 mm to 150 mm**
	A 351,CF8M	W.O.G.	275 PSI @ 100°F	1896 KPa @ 38°C
		Saturated Steam (WSP)	195 PSI @ 386°F	1344 KPa @ 197°C
NOM. RATING	**MATERIAL**	**MEDIA**	**1-½" to 6"**	**40 mm to 150 mm**
ASME CLASS 300	A 216, WCB	W.O.G.	740 PSI @ 100°F	5102 KPa @ 38°C
		Saturated Steam (WSP)	250 PSI @ 406°F	1724 KPa @ 208°C
	MATERIAL	**MEDIA**	**1-½" to 6"**	**40 mm to 150 mm**
	A 351, CF8M	W.O.G.	720 PSI @ 100°F	4964 KPa @ 38°C
		Saturated Steam (WSP)	250 PSI @ 406°F	1724 KPa @ 208°C

KECKLEY

TECHNICAL DATA
DIMENSIONS AND WEIGHTS

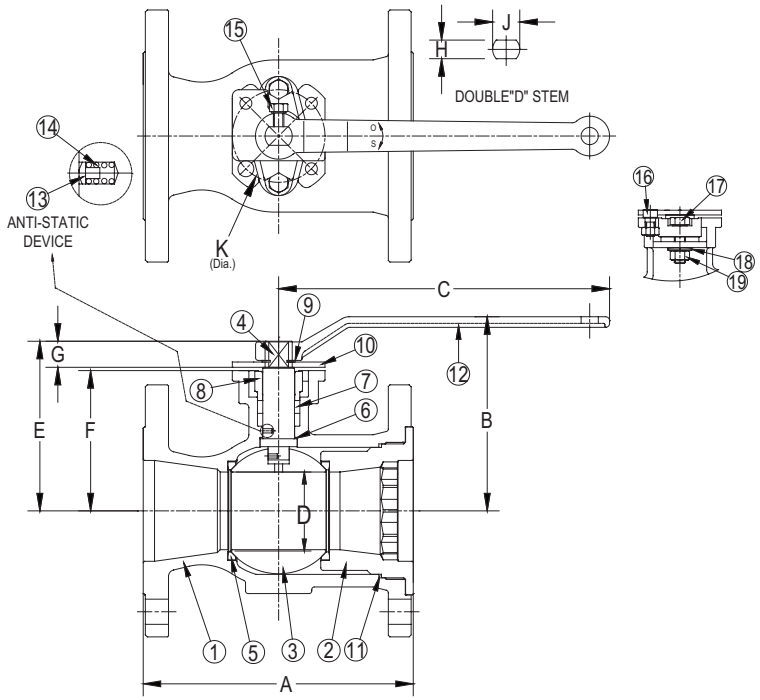

Style BVF1

Unibody Flanged Ball Valve

PARTS LIST			
ITEM	DESCRIPTION	MATERIAL	
1	Body	A 216, WCB	A 351, CF8M
2	Tailpiece	A 216, WCB	A 351, CF8M
3	Ball	A 351, CF8M or 316SS	A 351, CF8M or 316SS
4	Stem	A 276, 316	A 276, 316
5	Seat (2)	R-PTFE	R-PTFE
6	Thrust Washer	PTFE	PTFE
7	Stem Packing	Graphite	Graphite
8	Packing Gland	A 351, CF8M	A 351, CF8M
9	Retaining Ring	300 Series SS	300 Series SS
10	Lock Plate	304SS	304SS
11	Body Gasket	Graphite	Graphite
12	Handle Assembly	300 Series SS	300 Series SS
13	Grounding Ball (2)	304SS	304SS
14	Grounding Spring (2)	304SS	304SS
15	Handle Bolt	304SS	304SS
16	Stop Bolt	304SS	304SS
17	Packing Bolt (2)	A 193, B8	A 193, B8
18	Belleville Washers	300 Series SS	300 Series SS
19	Packing Nut (2)	A 194, Grade 8	A 194, Grade 8

SIZE		DIMENSIONS															
		A				B				C		D		E			
		150 lb.		300 lb.		150 lb.		300 lb.		150 lb. & 300 lb.		150 lb. & 300 lb.		150 lb.		300 lb.	
in	mm	in	mm	in	mm	in	mm	in	mm	in	mm	in	mm	in	mm	in	mm
1-1/2	40	6.5	165.1	7.50	190.5	4.07	103.38	4.07	103.38	10.02	254.51	1.19	30.23	3.33	84.58	3.33	84.58
2	50	7.0	177.8	8.50	215.9	4.61	117.09	4.83	122.68	10.02	254.51	1.50	38.10	3.87	98.30	4.08	103.63
*2-1/2	65	7.5	190.5	N/A		5.35	135.89	N/A		10.02	254.51	2.00	50.80	4.61	117.09	N/A	
3	80	8.0	203.2	11.12	284.5	5.73	145.54	5.73	145.54	10.02	254.51	2.31	58.67	4.99	126.75	4.99	126.75
4	100	9.0	228.6	12.00	304.8	6.71	170.43	6.99	177.55	18.11	459.99	2.99	75.95	6.14	155.96	6.42	163.07
6	150	10.5	266.7	15.88	403.4	8.43	214.12	8.43	214.12	18.11	459.99	4.49	114.05	7.85	199.39	7.85	199.69

SIZE		DIMENSIONS												
		F				G		H		J		K		ISO PATTERN
		150 lb.		300 lb.		150 lb. & 300 lb.		150 lb. & 300 lb.		150 lb. & 300 lb.		150 lb. & 300 lb.		
in	mm	in	mm	in	mm	in	mm	in	mm	in	mm	in	mm	
1-1/2	40	2.51	63.75	2.55	64.77	0.76	19.30	0.55	13.97	0.71	18.03	2.76	70.0	F07
2	50	3.07	77.98	3.29	83.57	0.76	19.30	0.55	13.97	0.71	18.03	2.76	70.0	F07
*2-1/2	65	3.80	96.52	N/A		0.76	19.30	0.55	13.97	0.71	18.03	2.76	70.0	F07
3	80	4.17	105.92	4.17	105.92	0.76	19.30	0.55	13.97	0.71	18.03	2.76	70.0	F07
4	100	4.84	122.94	5.12	130.05	1.26	32.00	0.67	17.02	1.03	26.16	4.02	102.0	F10
6	150	6.50	165.10	6.50	165.10	1.26	32.00	0.67	17.02	1.03	26.16	4.02 & 4.92	102.0 & 125.0	F10 & F12

*2-1/2" only offered in 150lb Class.
Certified dimensional drawings are available upon request.
†This table reflects only the nearest metric equivalents.

WEIGHTS

Size		1-1/2"	2"	2-1/2"	3"	4"	6"
150	lbs	12.5	18.5	27.0	33.0	61.0	99.0
	kgs	5.7	8.4	12.2	15.0	27.7	44.9
300	lbs	20.0	24.0	N/A	49.0	83.0	157.0
	kgs	9.1	10.9	N/A	22.2	37.6	71.2

FLOW COEFFICIENTS

Size	C_v	Size	C_v	Size	C_v
1-1/2"	100	2-1/2"	285	4"	610
2"	145	3"	425	6"	920

MAX TORQUE

Size	in/lb	Size	in/lb	Size	in/lb
1-1/2"	250	2-1/2"	475	4"	1000
2"	400	3"	550	6"	1700

PRESSURE vs. TEMPERATURE CHART

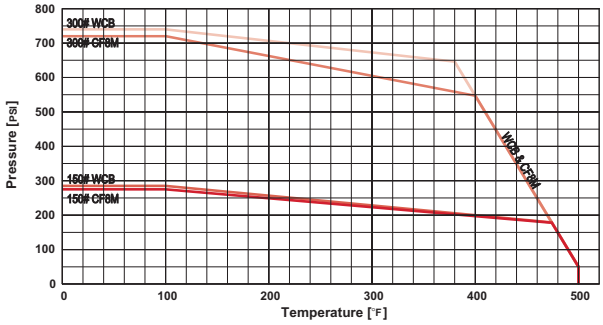

KECKLEY

Style BVF2

Ball Valve
Carbon Steel (ASTM A 216, Grade WCB)
150 lb. & 300 lb. Flanged

Stainless Steel (ASTM A 351, Grade CF8M)
150 lb. & 300 lb. Flanged

Split-Body Full Port Flanged Ball Valve

1½" - 8" Class 150
1½" - 6" Class 300

APPLICATIONS

Industrial and Oil/Gas piping applications requiring the higher flow capacity and lower pressure drop of full port internal flow-ways, and those applications where ease of repairability is desired.

CONSTRUCTION

The Keckley Style BVF2 Split-Body full port flanged end ball valves employ investment cast and shell cast bodies & tailpieces, all produced from ASTM grade materials that are properly heat treated and chemically finished. All wall thicknesses comply with ASME B16.34 as do bolting stress levels.

FEATURES

- 2-Piece Bolted Body, Full Port Construction
- Fully Compliant to ASME B16.34
- Fully Compliant to API 608
- API 607 6th Edition Fire-Safe
- All Models are NACE MR0175 Compliant
- Submerged Packing System & Direct Mount Actuation
- Standard ISO Actuator Mounting Pads on All Sizes
- Standard Locking Stainless Steel Handles
- Second Generation PTFE Seats Provide Higher Operating Temperatures
- Standard Electrically Grounded Ball & Stem
- All Sizes use Body Studs & Nuts for Ease of Disassembly

ORDERING

Reference ***How to Order BVF2 Ball Valves*** for building the Keckley Product Number.

WORKING PRESSURES - NON SHOCK

NOM. RATING	MATERIAL	MEDIA	1-½" to 8"	40 mm to 200 mm
ASME CLASS 150	A 216, WCB	W.O.G.	285 PSI @ 100°F	1965 KPa @ 38°C
		Saturated Steam (WSP)	200 PSI @ 388°F	1379 KPa @ 198°C
	MATERIAL	**MEDIA**	**1-½" to 8"**	**40 mm to 200 mm**
	A 351,CF8M	W.O.G.	275 PSI @ 100°F	1896 KPa @ 38°C
		Saturated Steam (WSP)	195 PSI @ 386°F	1344 KPa @ 197°C
NOM. RATING	**MATERIAL**	**MEDIA**	**1-½" to 6"**	**40 mm to 150 mm**
ASME CLASS 300	A 216, WCB	W.O.G.	740 PSI @ 100°F	5102 KPa @ 38°C
		Saturated Steam (WSP)	250 PSI @ 406°F	1724 KPa @ 208°C
	MATERIAL	**MEDIA**	**1-½" to 6"**	**40 mm to 150 mm**
	A 351, CF8M	W.O.G.	720 PSI @ 100°F	4964 KPa @ 38°C
		Saturated Steam (WSP)	250 PSI @ 406°F	1724 KPa @ 208°C

KECKLEY

TECHNICAL DATA
DIMENSIONS AND WEIGHTS

8" Class 150 Stem Design

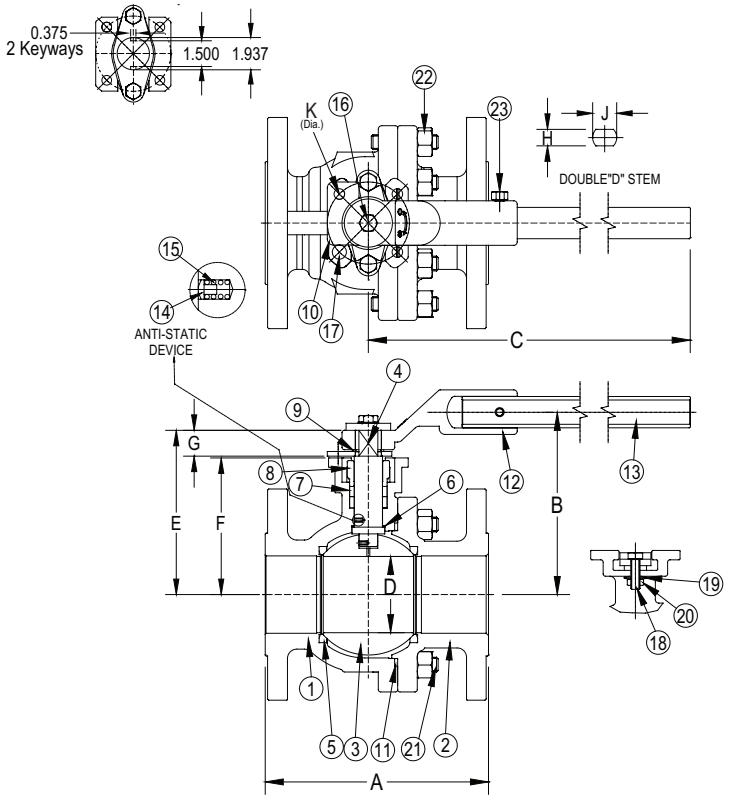

Style BVF2

Split-body Flanged Ball Valve

PARTS LIST			
ITEM	DESCRIPTION	MATERIAL	
1	Body	A 216, WCB	A 351, CF8M
2	Tailpiece	A 216, WCB	A 351, CF8M
3	Ball	A 351, CF8M or 316SS	A 351, CF8M or 316SS
4	Stem	A 276, 316	A 276, 316
5	Seat (2)	R-PTFE	R-PTFE
6	Thrust Washer	PTFE	PTFE
7	Stem Packing	Graphite	Graphite
8	Packing Gland	A 351, CF8M	A 351, CF8M
9	Retaining Ring	300 Series SS	300 Series SS
10	Lock Plate	304SS	304SS
11	Body Gasket	Graphite	Graphite
12	Handle	300 Series SS	300 Series SS
13	Handle Extension*	Carbon Steel	Carbon Steel
14	Grounding Ball (2)	316SS	316SS
15	Grounding Spring (2)	304SS	304SS
16	Handle Bolt	304SS	304SS
17	Stop Bolt	304SS	304SS
18	Packing Bolt (2)	A 193, B8	A 193, B8
19	Belleville Washers	300 Series SS	300 Series SS
20	Packing Nut (2)	A 194, 8	A 194, 8
21	Body Stud Bolts	A 193, B7	A 193, B8
22	Body Nuts	A 194, 2H	A 194, 8
23	Handle Ext. Bolt*	304SS	304SS

*Note: Size 2-1/2" to 6" only.

SIZE		DIMENSIONS																	
		A				B				C				D		E			
		150 lb.		300 lb.		150 lb.		300 lb.		150 lb.		300 lb.		150 lb. & 300 lb.		150 lb.		300 lb.	
in	mm	in	mm	in	mm	in	mm	in	mm	in	mm	in	mm	in	mm	in	mm	in	mm
1-1/2	40	6.5	165.1	7.50	190.5	4.88	123.95	4.96	125.98	10.02	254.51	10.02	254.51	1.50	38.1	4.13	104.90	4.21	106.93
2	50	7.0	177.8	8.50	215.9	5.20	132.08	5.30	134.62	10.02	254.51	10.02	254.51	2.00	50.8	4.45	113.03	4.53	115.06
*2-1/2	65	7.5	190.5	N/A		6.12	155.45	N/A		15.94	404.88	N/A		2.50	63.5	5.51	139.95	N/A	
3	80	8.0	203.2	11.12	284.5	6.81	172.97	6.23	158.24	15.94	404.88	15.94	404.88	3.00	76.2	6.20	157.48	6.20	157.48
4	100	9.0	228.6	12.00	304.8	7.72	196.09	7.31	185.67	18.11	459.99	18.11	459.99	4.00	101.6	7.16	181.86	7.16	181.86
6	150	15.5	393.7	15.88	403.4	9.88	250.95	9.55	242.57	24.02	610.11	24.61	625.09	6.00	152.4	9.35	237.49	9.35	237.49
*8	200	18.0	457.2	N/A		N/A				N/A				8.00	203.2	13.33	338.58	N/A	

SIZE		DIMENSIONS																
		F				G		H				J				K		ISO PATTERN
		150 lb.		300 lb.		150 lb. & 300 lb.		150 lb.		300 lb.		150 lb.		300 lb.		150 lb. & 300 lb.		
in	mm	in	mm	in	mm	in	mm	in	mm	in	mm	in	mm	in	mm	in	mm	
1-1/2	40	3.35	85.09	3.43	87.12	0.77	19.56	0.55	13.97	0.55	13.97	0.71	18.03	0.71	18.03	2.76	70.0	F07
2	50	3.64	92.46	3.72	94.49	0.77	19.56	0.55	13.97	0.55	13.97	0.71	18.03	0.71	18.03	2.76	70.0	F07
*2-1/2	65	4.59	116.59	N/A		0.87	22.10	0.67	17.02	N/A		0.87	22.10	N/A		2.76	70.0	F07
3	80	5.28	134.11	5.28	134.11	0.87	22.10	0.67	17.02	0.67	17.02	0.87	22.10	0.87	22.10	2.76	70.0	F07
4	100	6.18	156.97	6.18	156.97	0.91	23.11	0.67	17.02	0.87	22.10	1.03	26.16	1.11	28.19	4.02	102.0	F10
6	150	7.80	198.12	7.80	198.12	1.50	38.10	0.91	23.11	1.06	26.92	1.37	34.80	1.43	36.32	4.02 & 4.92	102.0 & 125.0	F10 & F12
8	200	10.45	265.43	N/A		2.87	72.90	N/A				N/A				5.51	140	F14

*2-1/2" & 8" only offered in 150lb Class.
Certified dimensional drawings are available upon request.
†This table reflects only the nearest metric equivalents.

WEIGHTS

Size		1-1/2"	2"	2-1/2"	3"	4"	6"	8"
150	lbs	15.4	21.8	37.0	47.1	83.6	178.9	322.6
	kgs	7.0	9.9	16.8	21.4	37.9	81.1	146.3
300	lbs	25.5	32.0	N/A	74.0	122.7	262.0	N/A
	kgs	11.6	14.5		33.6	55.7	118.8	

MAX TORQUES (in/lb)

Size	1-1/2"	2"	2-1/2"	3"	4"	6"	8"
150 lb	300	400	600	1000	2000	3800	8000
300 lb	300	400	N/A	1000	2000	3800	N/A

FLOW COEFFICIENTS

Size	C_v
1-1/2"	285
2"	500
2-1/2"	550
3"	1300
4"	2500
6"	5250
8"	10400

PRESSURE vs. TEMPERATURE CHART

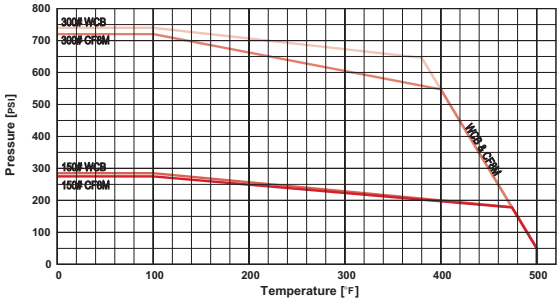

KECKLEY

Strainer Information

Strainer Features 2
Strainer Selection Chart 3

Screen Options 4
Screen Equivalents 5

Magnets 5
Reinforcing Bands 5
Determining Net Free Area Ratios 5

Strainer Maintenance 6

STRAINER FEATURES

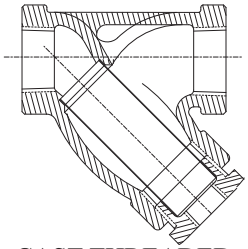

CAST THREADED Y-STRAINER

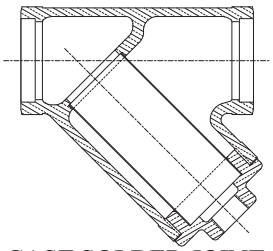

CAST SOLDER JOINT Y-STRAINER

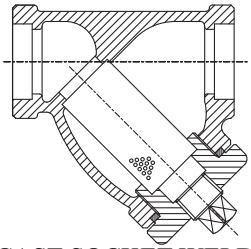

CAST SOCKET WELD Y-STRAINER

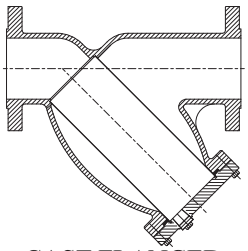

CAST FLANGED Y-STRAINER

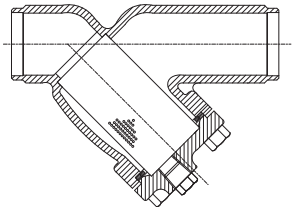

CAST BUTT WELD Y-STRAINER

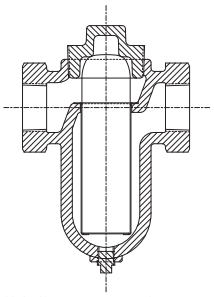

CAST THREADED BASKET STRAINER

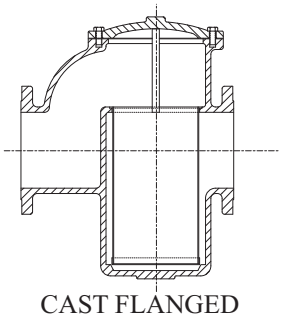

CAST FLANGED BASKET STRAINER

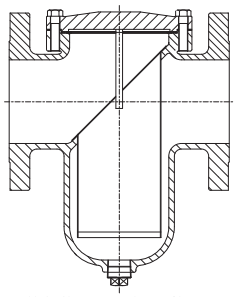

CAST FLANGED BASKET STRAINER

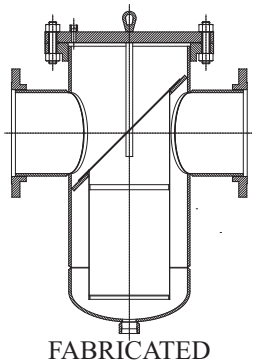

FABRICATED FLANGED BASKET STRAINER

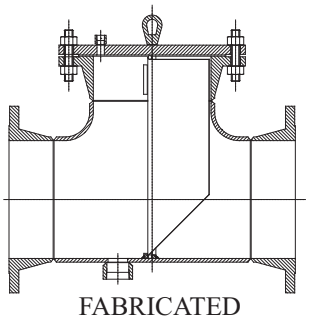

FABRICATED FLANGED TEE STRAINER

MATERIALS OF CONSTRUCTION

- Iron
- Ductile Iron
- Bronze
- Nickel Aluminum Bronze
- Carbon Steel
- Low Temperature Steel
- 316 Stainless Steel
- Alloy 20
- Hastelloy C276
- Chrome-Moly
- Monel
- Duplex Stainless Steel
- Titanium
- Other Materials Upon Request.

RATINGS

- ANSI 125 PSIG
- ANSI 150 PSIG
- ANSI 250 PSIG
- ANSI 300 PSIG
- ANSI 600 PSIG
- ANSI 900 PSIG
- ANSI 1500 PSIG
- ANSI 2500 PSIG

OPTIONS

- Epoxy Coating.
- Galvanized Strainers.
- Cleaning and Sealing for Oxygen Service.
- Blow-off Size or Location Other than Standard.
- Special Flange Drilling on Strainers (i.e. British).
- Shock and Vibration Testing.
- X-Ray Analysis.

END CONNECTIONS

- Threaded
- Seat / Solder Joint
- Socket Weld
- Flat Face
- Raised Face
- Ring Type Joint
- Butt Weld

FEATURES

- Low Pressure Drop
- Streamlined Design
- Large Strainer Screen
- Compact End to End Dimension
- Cast or Fabricated Construction

SIZES

- Cast - 1/4” (8mm) to 24” (600mm).
- Fabricated - Custom Sizes to Meet any Requirement.

KECKLEY

STRAINER SELECTION CHART

Style	Type	End Connection	Size (Inches)	STEAM Working Pressure Non Shock Maximum Pressure (PSI)	STEAM Working Pressure Non Shock Maximum Temperature (°F)	WATER, OIL, or GAS Working Pressure Non Shock Maximum Pressure (PSI)	WATER, OIL, or GAS Working Pressure Non Shock Maximum Temperature (°F)
CAST IRON							
B	Y	Threaded	¼ to 4	250	406	400	150
B7							
A/GA	Y	125 lb. Flanged	2 to 12	125	450	200	150
			14 to 24	100	353	150	150
	Y	250 lb. Flanged	2 to 12	250	450	500	150
			14 to 16*	200	406	300	150
D/DV	Basket	Threaded	½ to 2	250	406	400	150
	Basket	125 lb. Flanged	2 to 12	125	450	200	150
	Basket	250 lb. Flanged	2 to 12	250	450	500	150
KT-7	Basket	Threaded	⅜ to 3			200	150
GFV	Basket	125 lb. Flanged	2 to 12	125	450	200	150
			14 to 16*	100	353	150	150
	Basket	250 lb. Flanged	2 to 6	250	450	500	150
GFV-K	Basket	125 lb. Flanged	2 to 12			200	100
CAST DUCTILE IRON							
BDI	Y	Threaded	½ to 2	450	650	640	100
KF-7	Basket	150 lb. Flanged	1½ to 12”			200	100
CAST BRONZE							
F-150	Y	Threaded	¼ to 3	125	400	200	150
E-150	Y	Solder Joint	¼ to 3	125	400	200	150
F-300	Y	Threaded	¼ to 3	235	400	400	150
E-300	Y	Solder Joint	¼ to 3	235	400	400	150
BA	Y	150 lb. Flanged	2 to 6*	150	406	225	150
		300 lb. Flanged	2 to 6*	300	406	500	150
BGFV	Basket	150 lb. Flanged	1½ to 12”	150	406	225	150
CAST NICKEL ALUMINUM BRONZE							
BA-7	Y	150 lb. Flanged	½ to 12	150	225	195	100
		300 lb. Flanged	½ to 12	360	500	515	100
BKF-7	Basket	150 lb. Flanged	1½ to 12*			200	100
BGFV	Basket	150 lb. Flanged	1½ to 12”	150	225	195	100
CAST CARBON STEEL							
SB-7	Y	600 lb. Threaded & Socket Weld	¼ to 3	600	838	1480	100
SB-7BC	Y	600 lb. Threaded & Socket Weld	¼ to 3	600	838	1480	100
SB	Y	1500 lb. Threaded & Socket Weld	½ to 3	1500	838	3705	100
SA-7	Y	150 lb. Flanged & Butt Weld	½ to 14*	150	565	285	100
		300 lb. Flanged & Butt Weld	½ to 14*	300	838	740	100
SA	Y	600 lb. Flanged & Butt Weld	½ to 12	600	838	1480	100
SD	Basket	300 lb. Threaded	⅜ to 3	300	838	740	100
SD-K	Basket	150 lb. Threaded	⅜ to 3			200	150
SGFV/SGFV-K†	Basket	150 lb. Flanged	2 to 14*	150	565	285	100
SGFV	Basket	300 lb. Flanged	2 to 14*	300	838	740	100
CAST 316 STAINLESS STEEL							
SSB-7	Y	600 lb. Threaded & Socket Weld	¼ to 3	600	1125	1140	100
SSB-7BC	Y	600 lb. Threaded & Socket Weld	¼ to 3	600	1125	1140	100
SSB	Y	1500 lb. Threaded & Socket Weld	½ to 3	1500	1125	3600	100
SSA-7	Y	150 lb. Flanged & Butt Weld	½ to 14*	150	565	275	100
		300 lb. Flanged & Butt Weld	½ to 14*	300	1125	720	100
SSA	Y	600 lb. Flanged & Butt Weld	½ to 12	600	1125	1440	100
SSD	Basket	300 lb. Threaded	⅜ to 3	300	1125	720	100
SSD-K	Basket	150 lb. Threaded	⅜ to 3			200	350
SSGFV/SSGFV-K†	Basket	150 lb. Flanged	2 to 14*	150	565	275	100
SSGFV	Basket	300 lb. Flanged	2 to 14*	300	1125	720	100

†Temperatures limited to o-rings and gasket materials, reference Technical Date Sheets. *Larger Sizes consult Factory

Also available: Duplex Basket Strainers; Fabricated “Y”, Basket, and Tee Type Strainers; Temporary Cone, Basket and Plate Strainers.

SCREEN OPTIONS

The screen or basket is the heart of the Keckley strainer. The media flows into the open end of the screen or basket and is strained as it passes through the screen towards the outlet. All particles larger than the screen opening are trapped inside. Screens are provided in perforated metal or wire mesh, depending on strainer size and/or material being strained. Only the best materials of the proper gauge to suit the service are used. All seams are spot welded for maximum strength. Double or reinforced screens are spot welded on the end peripheries as well as the seams. Reinforced screens consist of a perforated sheet lined with wire mesh. Keckley engineers have designed the screens to provide maximum total screen area.

Perforated Sheet Metal Sizes

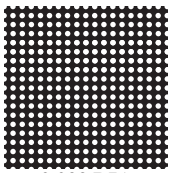

0.033 DIA
1/32" Approximately
331 Holes Per Sq. In.
29% Open Area

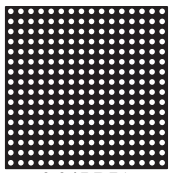

0.045 DIA
3/64" Approximately
225 Holes Per Sq. In.
33% Open Area

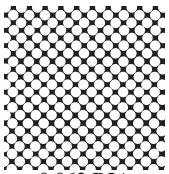

0.062 DIA
1/16" Approximately
98 Holes Per Sq. In.
30% Open Area

0.094 DIA
3/32" Approximately
51 Holes Per Sq. In.
36% Open Area

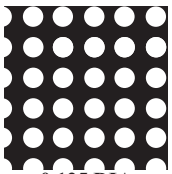

0.125 DIA
1/8" Approximately
29 Holes Per Sq. In.
43% Open Area

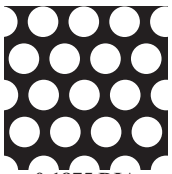

0.1875 DIA
3/16" Approximately
18 Holes Per Sq. In.
51% Open Area

Mesh Sizes

0.25 DIA
1/4" Approximately
12 Holes Per Sq. In.
58% Open Area

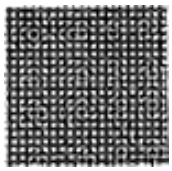

20 MESH
Wire Dia. 0.015
Opening 0.034
49% Open Area

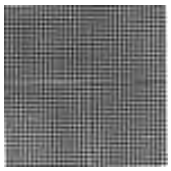

30 MESH
Wire Dia. 0.011
Opening 0.021
45% Open Area

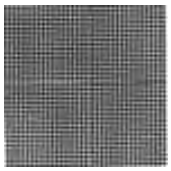

40 MESH
Wire Dia. 0.009
Opening 0.016
41% Open Area

50 MESH
Wire Dia. 0.0085
Opening 0.011
33% Open Area

60 MESH
Wire Dia. 0.0065
Opening 0.010
38% Open Area

80 MESH
Wire Dia. 0.0055
Opening 0.0070
31% Open Area

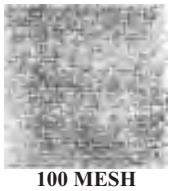

100 MESH
Wire Dia. 0.0045
Opening 0.0055
30% Open Area

150 MESH
Wire Dia. 0.0026
Opening 0.0041
37% Open Area

200 MESH
Wire Dia. 0.0021
Opening 0.0029
34% Open Area

***300 MESH**
Wire Dia. 0.0012
Opening 0.002
41% Open Area

***300 Mesh available in Duplex Strainers only.**

Stainless steel screens are standard in all strainers except for Style F-300, E-300 and flanged bronze strainers; these strainers are supplied with brass screens. Other screen materials are available upon request (i.e. 316 SS, Monel, Hastelloy C276, Alloy 20, Duplex Stainless Steel, Titanium). In stainless steel, the smallest perforation obtainable is generallly twice the thickness of the metal itself. Therefore, perforations from 0.033" through 0.250", dependent on metal thickness, are readily available. When extra fine straining is required of the larger strainers, reinforced screens consisting of a perforated sheet lined with wire mesh are recommended. This allows removal of fine particles with added durability.

MAGNETS

Magnets can be provided as an option which, when placed inside the strainer screen, will remove very fine iron or steel particles present in fluid.

Magnets provide protection for equipment against abrasive damage.

Strainer Size	Magnets required
2½" – 4"	1 magnets
5" – 6"	2 magnets
8" – 10"	3 magnets
12" – 14"	4 magnets
16" – 18"	5 magnets

*Sizes 2" and smaller strainers can be furnished with magnetic plugs.

REINFORCING BANDS

Reinforcing bands can be used to add additional strength and durability to the screens or baskets when straining conditions have higher than normal pressure drops.

DETERMINING NET FREE AREA RATIOS

To calculate the ratio, use the following formula:

Formula:

1. Choose the size perforation or mesh needed to remove particles from the media passing through the strainer.
2. Multiply the *TOTAL SCREEN AREA* by the *PERCENT OF OPEN AREA of the screen*. The result equals the *OPEN AREA of the screen.*
3. Divide the result (*OPEN AREA of the screen*) by *the INSIDE AREA of the pipe* to give *the ratio of net free area of the screen to the pipe.*

Example: (2" Style B screwed "Y" strainer with a 20 mesh 304 stainless steel screen)

36.23 (*total screen area in²*)
x .49 (*20 mesh = 49% open area*)
17.753 (*total open area of screen*)

17.753" / 3.356" (*inside area of 2" pipe*) = 5.29:1
(RATIO OF NET FREE AREA OF THE SCREEN TO PIPE AREA)

INSIDE AREA OF THE PIPE (in²)							
Size	(in²)	Size	(in²)	Size	(in²)	Size	(in²)
1/4"	0.104	1-1/4"	1.496	4"	12.732	12"	111.946
3/8"	0.191	1-1/2"	2.036	5"	20.008	14"	135.294
1/2"	0.304	2"	3.356	6"	28.894	16"	176.738
3/4"	0.534	2-1/2"	4.788	8"	48.914	18"	223.71
1"	0.864	3"	7.394	10"	78.865	20"	278.04

Screen Opening Equivalents

Fractional Inches	Decimal Inches	Millimeters	Microns	Mesh
--	0.001	--	25	--
--	0.0015	--	37	400
--	0.002	--	50	300
--	0.003	--	75	**200**
--	0.004	1/10	100	**150**
--	0.005	1/8	125	115
--	0.006	--	149	**100**
--	0.007	--	177	**80**
--	0.010	1/4	250	**60**
--	0.011	--	280	**50**
--	0.016	--	406	**40**
--	0.020	1/2	500	--
--	0.021	--	533	**30**
--	0.030	3/4	750	--
1/32	0.033	--	838	--
--	0.034	--	840	**20**
--	0.039	1	1000	16
3/64	0.045	--	1143	--
--	0.046	--	1190	14
--	0.055	--	1410	12
--	0.059	1-1/2	1500	--
1/16	0.062	--	1575	--
--	0.065	--	1680	10
--	0.079	2	2000	9
--	0.093	--	2380	8
3/32	0.094	--	2388	--
--	0.110	--	2790	7
--	0.118	3	3000	--
1/8	0.125	--	3175	--
--	0.131	--	3330	6
--	0.156	4	4000	5
--	0.185	--	4700	4
3/16	0.1875	--	4763	--
--	0.197	5	5000	--
--	0.236	6	6000	--
1/4	0.250	--	6350	--
--	0.263	--	6700	3

Sizes in **bold red** are available from stock at Keckley Company.
Consult Factory for the availability of other sizes including those not listed.

KECKLEY PIPELINE STRAINERS
INSTALLATION AND MAINTENANCE

GENERAL

A Y-strainer can be installed in either a horizontal or vertical position (Downward flow) with the screen element pointing downward. This allows the strainer screen to collect material in the strainer at the lowest point of the screen.

Basket strainers are designed for installation in horizontal lines. They are commonly used for liquid service applications.

INSTALLATION

Carefully check all machined surfaces to make sure they are free of defects, and the inside of the strainer is free of foreign objects. All strainers should be installed with the arrow on the strainer body pointing in the direction of flow. For installation of threaded strainers an appropriate sealant should be used on the threads. For the installation of flanged strainers the flanged bolting should be tightened gradually going back and forth in a clockwise rotation until all bolts are tight. The system can now be pressurized gradually while checking for any leakage around all connections. If leakage occurs, depressurize the system and start the installation procedure over.

MAINTENANCE

WARNING

Before the removal or loosening of any bushing, cap, plug or cover on a strainer, extreme caution should be exercised to ensure there is zero pounds pressure in the system. Only after the system has been depressurized, should the strainer be drained for service.

SERVICE ON A PRESSURIZED STRAINER CAN CAUSE SERIOUS INJURY AND/OR PROPERTY DAMAGE.

A Y-strainer screen can be cleaned by removing the plug in the bushing, cap or bolted cover allowing the strainer to drain the loose material inside the screen. If a blow-off valve is connected to the strainer it can be opened to achieve the same result as the above. The Y-strainer screen can also be cleaned by removing the bushing, cap or cover to access the screen element.

Basket strainers with a closed bottom basket can be cleaned by removing the cap or cover and pulling out the basket screen for service. If the strainer screen is bottomless (Style DV, BDV, SDV) the blow-off plug can be removed allowing it to be drained and cleaned like a Y-strainer.

Care should be taken in cleaning screens. After removing a screen, it should be soaked in a cleaning solution or cleaned by using a brush. Do not allow trapped material in the screen to harden, as it will be difficult to remove. A regular cleaning schedule is recommended to avoid screens from becoming clogged.

A pressure gauge installed before and after a strainer will indicate a pressure loss due to clogging. This can help in establishing a maintenance schedule for cleaning the strainer screen. Extra screens can useful in keeping the system operating during the cleaning process.

KECKLEY

"Y" Strainer

Iron Body (ASTM A 126, CLASS B)
Style B 250# Threaded ¼" – 4" 2
Technical Data..... 3

Style B7 250# Threaded ¼" – 3" 4
Technical Data..... 5

Style A-7 125# Flange 2" – 24" 6
Technical Data..... 7

Style A 250# Flange 2" – 16" 8
Technical Data..... 9

Ductile Iron Body (ASTM A 536, GRADE 65-45-12)
Style BDI 300# Threaded ½"– 2" 10
Technical Data..... 11

Bronze Body (ASTM B 584, C84400)
Style F-150 125# Threaded ¼" – 3" 12
Style E-150 125# Solder Joint ¼" – 3" 12
Technical Data..... 13

Lead Free Bronze Body (ASTM B 584, C89833)
Style F7 125# Threaded ¼" – 3" 14
Style E7 125# Solder Joint ¼" – 3" 14
Technical Data..... 15

Bronze Body (ASTM B 62, C83600)
Style F-300 250# Threaded ¼" – 3" 16
Style E-300 250# Solder Joint ¼" – 3" 16
Technical Data..... 17

Style BA 150# Flange 2" – 6" 18
Style BA 300# Flange 2" – 6" 18
Technical Data..... 19

Nickel Aluminum Bronze Body (ASTM B 148, C95800)
Style BA-7 150# Flange ½" – 12" 20
Style BA-7 300# Flange ½" – 12" 20
Technical Data..... 21

Carbon Steel Body (ASTM A 216, GRADE WCB)
Style SB-7 600# Threaded ¼" – 3" 22
Style SB-7 600# Socket Weld ¼" – 3" 22
Technical Data..... 23

Style SB-7BC 600# Threaded ¼" – 3" 24
Style SB-7BC 600# Socket Weld ¼" – 3" 24
Technical Data..... 25

Carbon Steel Body (Cont.) (ASTM A 216, GRADE WCB)
Style SB 1500# Threaded ½" – 3" 26
Style SB 1500# Socket Weld ½" – 3" 26
Technical Data..... 27

Style SA-7 150# Flange ½" – 14" 28
Style SA-7 300# Flange ½" – 14" 28
Technical Data..... 29

Style SA 600# Flange ½" – 12" 30
Technical Data..... 31

Style SA-7 150# Butt Weld ½" – 12" 32
Style SA-7 300# Butt Weld ½" – 12" 32
Technical Data..... 33

Style SA 600# Butt Weld ½" – 12" 34
Technical Data..... 35

316 Stainless Steel Body (ASTM A 351, GRADE CF8M)
Style SSB-7 600# Threaded ¼" – 3" 36
Style SSB-7 600# Socket Weld ¼" – 3" 36
Technical Data..... 37

Style SSB-7BC 600# Threaded ¼" – 3" 38
Style SSB-7BC 600# Socket Weld ¼" – 3" 38
Technical Data..... 39

Style SSB 1500# Threaded ½" – 3" 40
Style SSB 1500# Socket Weld ½" – 3" 40
Technical Data..... 41

Style SSA-7 150# Flange ½" – 14" 42
Style SSA-7 300# Flange ½" – 14" 42
Technical Data..... 43

Style SSA 600# Flange ½" – 12" 44
Technical Data..... 45

Style SSA-7 150# Butt Weld ½" – 12" 46
Style SSA-7 300# Butt Weld ½" – 12" 46
Technical Data..... 47

Style SSA 600# Butt Weld ½" – 12" 48
Technical Data..... 49

Pressure Drop Charts
Threaded "Y" Strainers 50
Flanged "Y" Strainers 51
Style B7 52

KECKLEY

Style B

Y-Strainer
Cast Iron (ASTM A 126, Class B)
250 lb. Threaded

Cast Iron Y-Strainer

APPLICATIONS

Steam, water, oil or gas where protection from foreign matter in a pipeline is required.

CONSTRUCTION

The Keckley Style B stainers are constructed from rugged cast iron castings that are machined to exacting specifications.

FEATURES

The Keckley Style B features a tapered bushing in sizes ¼" thru 2" and bolted cover with gasket for sizes 2-1/2", 3" and 4". All Keckley Style B strainers are furnished standard with a NPT blow-off connection and can be supplied with a cast iron blow-off plug upon request.

SCREENS

Standard screens are 20 mesh 304 stainless steel through size 2". Sizes 2-1/2", 3" and 4" are furnished with 1/16" perforated 304 stainless steel screens. All screens are spot welded for maximum strength. Different size perforations and meshes are available in stainless steel, monel, and brass to meet specific media requirements. If media is not indicated, screens for *water* will be supplied.

SELF CLEANING

Self cleaning is accomplished by opening the valve or drain plug connected to the blow-off port. **Warning:** See Maintenance Instructions on page S6 of the Strainer Information Section for additional precautions and detailed information on servicing the strainer.

WORKING PRESSURES - NON SHOCK

NOM. RATING	MEDIA	1/4" to 4"	8 mm to 100 mm
250# (Threaded)	STEAM	250 PSI @ 406ºF	1724 KPa @ 208ºC
	W.O.G.	400 PSI @ 150ºF	2759 KPa @ 66ºC

GOVERNMENT/MILITARY SPECIFICATIONS

Style B cast iron threaded strainers meet or exceed government specification WW-S-2739 (Supersedes MIL-S-16293).

KECKLEY

TECHNICAL DATA
DIMENSIONS AND WEIGHTS

Style B

Y-Strainer, 250 lb. Threaded
Cast Iron (ASTM A 126, Class B)

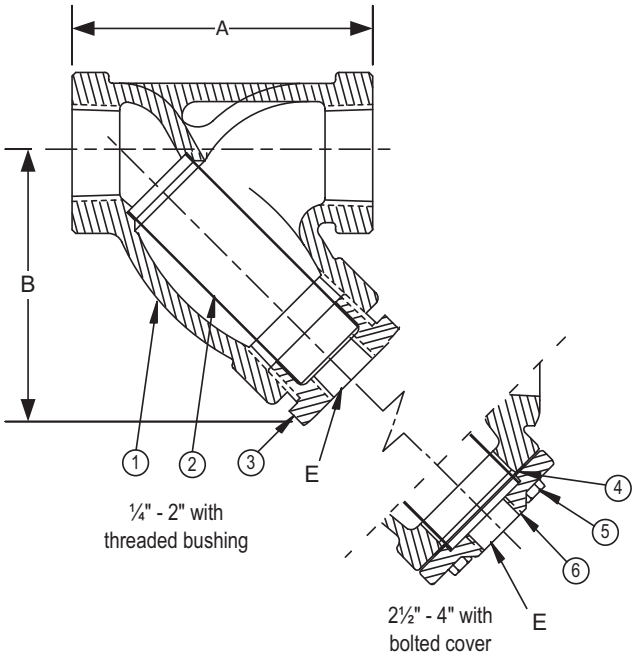

PARTS LIST		
ITEM	DESCRIPTION	MATERIAL
1	Body	Cast Iron (ASTM A 126, Class B)
2	Screen	Stainless Steel (304)
3	Bushing	Malleable Iron
4	Gasket*	Composition
5	Cap Screw*	Steel
6	Cover*	Cast Iron (ASTM A 126, Class B)

Optional: Blow-off Plug, Malleable Iron *2 ½", 3" & 4" only.

STANDARD SCREENS SUPPLIED

SIZE			SCREEN PERFORATION					
			FOR STEAM		OPEN AREA	FOR LIQ-UID		OPEN AREA
in	mm		in	mm		in	mm	
1/4 to 2	8 to 50	20 MESH STAINLESS STEEL						49%

Standard screens supplied are for **liquid service**, unless otherwise specified.
Options: Other meshes, perforations, and screen materials are available.

SIZE		DIMENSIONS						WEIGHTS	
		A		B		E			
in	mm	in	mm	in	mm	in	mm	lbs	kgs
1/4	8	3	76	2-5/8	67	3/8	10	2	0.9
3/8	10	3	76	2-5/8	67	3/8	10	2	0.9
1/2	15	3	76	2-5/8	67	3/8	10	2	0.9
3/4	20	4	102	3-5/8	92	1/2	15	3	1.4
1	25	4-7/8	124	4-1/2	114	3/4	20	4.5	2.0
1-1/4	32	5-1/8	130	4-3/4	121	3/4	20	6	2.7
1-1/2	40	5-3/4	146	4-7/8	124	1	25	8	3.6
2	50	7-1/4	184	5-3/4	146	1-1/4	32	15.5	7.0
2-1/2	65	8-7/8	225	7-1/2	191	1-1/4	32	25	11.3
3	80	10	254	8	203	1-1/2	40	36	16.3
4	100	15-1/4	387	12-1/2	318	2	50	95	43.1

Certified dimensional drawings are available upon request.
†This table reflects only the nearest metric equivalents.

FLOW COEFFICIENTS

Size	C_V	Size	C_V	Size	C_V
1/2"	9.5	1-1/4"	44.9	2-1/2"	129.7
3/4"	18.7	1-1/2"	61	3"	161.3
1"	30	2"	98	4"	256.2

TOTAL SCREEN AREA

Size	(in^2)	Size	(in^2)	Size	(in^2)
1/2"	5.50	1-1/4"	18.69	2-1/2"	54.13
3/4"	8.59	1-1/2"	23.37	3"	73.51
1"	15.22	2"	36.23	4"	154.98

*See DETERMINING RATIOS on page S5 of the Strainer Information Section for calculating NET FREE AREA of the screen to inside pipe area.

PRESSURE vs. TEMPERATURE CHART

250# Threaded Cast Iron (ASTM A 126, Class B)

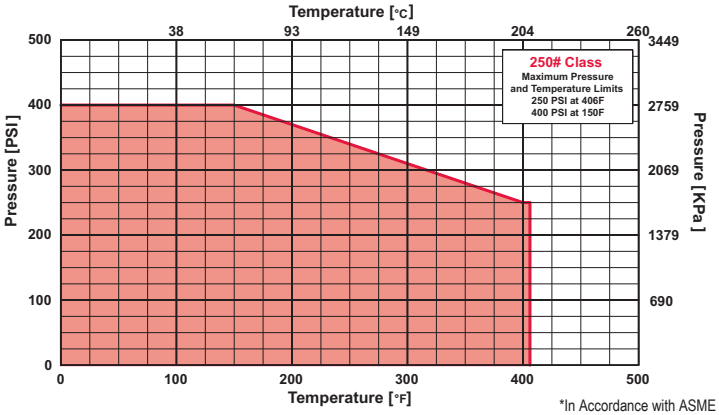

*In Accordance with ASME B16.4

KECKLEY

Style B7

Y-Strainer
Cast Iron (ASTM A 126, Class B)
250 lb. Threaded

Cast Iron Y-Strainer

APPLICATIONS

Steam, water, oil or gas where protection from foreign matter in a pipeline is required.

CONSTRUCTION

The Keckley Style B7 stainers are constructed from rugged cast iron castings that are machined to exacting specifications.

FEATURES

The Keckley Style B7 strainer features a straight thread bushing in sizes ¼" thru 3". All Keckley Style B7 strainers are furnished standard with a NPT blow-off connection and can be supplied with a cast iron blow-off plug upon request.

SCREENS

Standard screens are 20 mesh 304 stainless steel through size 2". Sizes 2-1/2" and 3" are furnished with 1/16" perforated 304 stainless steel screens. All screens are spot welded for maximum strength. Different size perforations and meshes are available in stainless steel, monel, and brass to meet specific media requirements. If media is not indicated, screens for *water* will be supplied.

SELF CLEANING

Self cleaning is accomplished by opening the valve or drain plug connected to the blow-off port. **Warning:** See Maintenance Instructions on page S6 of the Strainer Information Section for additional precautions and detailed information on servicing the strainer.

WORKING PRESSURES - NON SHOCK

NOM. RATING	MEDIA	1/4" to 3"	8 mm to 80 mm
250# (Threaded)	STEAM	250 PSI @ 406ºF	1724 KPa @ 208ºC
	W.O.G.	400 PSI @ 150ºF	2759 KPa @ 66ºC

KECKLEY

TECHNICAL DATA
DIMENSIONS AND WEIGHTS

Style B7

Y-Strainer, 250 lb. Threaded
Cast Iron (ASTM A 126, Class B)

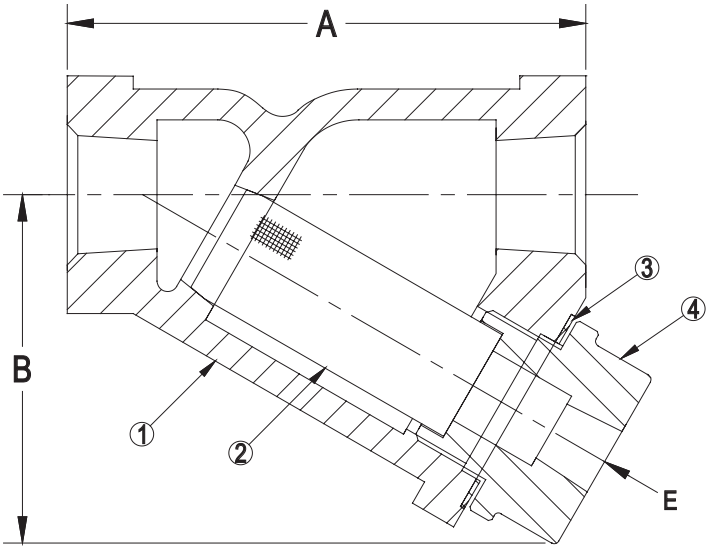

PARTS LIST		
ITEM	DESCRIPTION	MATERIAL
1	Body	Cast Iron (ASTM A 126, Class B)
2	Screen	Stainless Steel (304)
3	Gasket	Graphite
4	Bushing	Cast Iron (ASTM A 126, Class B)

Optional: Blow-off Plug, Malleable Iron

STANDARD SCREENS SUPPLIED

SIZE			SCREEN PERFORATION					
			FOR STEAM		OPEN AREA	FOR LIQ-UID		OPEN AREA
in	mm		in	mm		in	mm	
1/4 to 2	8 to 50	20 MESH STAINLESS STEEL						49%

Standard screens supplied are for **liquid service**, unless otherwise specified.
Options: Other meshes, perforations, and screen materials are available.

SIZE		DIMENSIONS						WEIGHTS	
		A		B		E			
in	mm	in	mm	in	mm	in	mm	lbs	kgs
1/4	8	3-3/16	81	2-1/16	52	1/4	8	2	0.7
3/8	10	3-3/16	81	2-1/16	52	1/4	8	2	0.7
1/2	15	3-3/16	81	2-1/16	52	1/4	8	2	0.7
3/4	20	3-3/4	95	2-7/16	61	3/8	10	3	1.0
1	25	4	102	2-5/8	66	3/8	10	3	1.4
1-1/4	32	5	127	3-3/8	85	3/4	20	5	2.3
1-1/2	40	5-3/4	146	3-7/8	98	3/4	20	7	3.0
2	50	7-	177	4-3/4	121	1	25	13	5.7
2-1/2	65	9-1/4	235	5-7/8	149	1-1/2	40	26	11.4
3	80	10	254	6	152	1-1/2	40	30	13.6

Certified dimensional drawings are available upon request.
†This table reflects only the nearest metric equivalents.

FLOW COEFFICIENTS

Size	C_V	Size	C_V	Size	C_V
1/4"	0.7	1"	22	2-1/2"	110
3/8"	2	1-1/4"	38	3"	160
1/2"	8	1-1/2"	42		
3/4"	15	2"	71		

TOTAL SCREEN AREA

Size	(in^2)	Size	(in^2)	Size	(in^2)
1/4"	3.57	1"	8.06	2-1/2"	47.12
3/8"	3.57	1-1/4"	12.94	3"	47.12
1/2"	3.57	1-1/2"	18.85		
3/4"	6.05	2"	27.44		

*See DETERMINING RATIOS on page S5 of the Strainer Information Section for calculating NET FREE AREA of the screen to inside pipe area.

PRESSURE vs. TEMPERATURE CHART

250# Threaded Cast Iron (ASTM A 126, Class B)

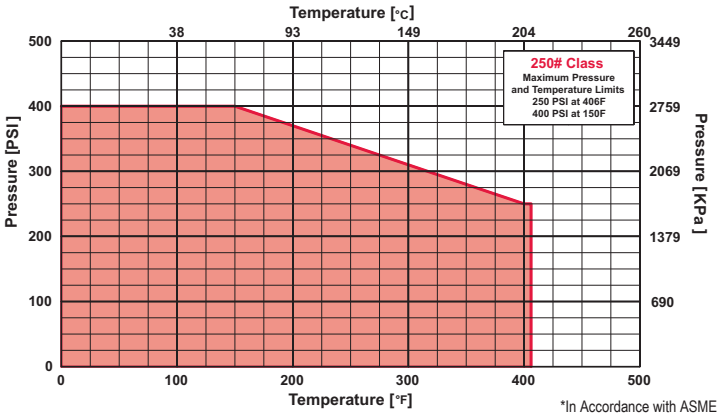

*In Accordance with ASME B16.4

KECKLEY

Style A-7

Y-Strainer
Cast Iron (ASTM A 126, Class B)
125 lb.

Cast Iron Y-Strainer

APPLICATIONS

Steam, water, oil or gas where protection from foreign matter in a pipeline is required.

CONSTRUCTION

The Keckley Style A-7 strainers are constructed from rugged cast iron castings that are machined to exacting specifications. These bodies have drilled flanges that are in accordance with ASME B16.1.

FEATURES

The Keckley Style A-7 strainer features a machined groove in both the body and cover for proper screen alignment and to ensure accurate reseating when servicing is required. Style A-7 strainers are furnished with a synthetic fiber that is compressed between the body and cover for maximum strength and durability. Keckley Style A-7 strainers can be furnished with a blow-off plug upon request.

SCREENS

Standard perforated 304 stainless steel screens are spot welded along the seam for maximum strength. Different size perforations and meshes are available in stainless steel, monel, and brass to meet specific media requirements. If the media is not indicated, screens for *water* will be supplied.

SELF CLEANING

Self cleaning is accomplished by opening the valve or drain plug connected to the blow-off port. **Warning:** See Maintenance Instructions on page S6 of the Strainer Information Section for additional precautions and detailed information on servicing the strainer.

WORKING PRESSURES - NON SHOCK

NOM. RATING	MEDIA	2" to 12"	50 mm to 300 mm
125# F.F. & D. (STANDARD FLANGE)	STEAM	125 PSI @ 450ºF	862 KPa @ 232ºC
	W.O.G.	200 PSI @ 150ºF	1379 KPa @ 66ºC
	MEDIA	**14" and UP**	**350 mm and UP**
	STEAM	100 PSI @ 353ºF	690 KPa @ 178ºC
	W.O.G.	150 PSI @ 150ºF	1035 KPa @ 66ºC

GOVERNMENT/MILITARY SPECIFICATIONS

Style A-7 cast iron flanged strainers meet or exceed government specification WW-S-2739 (Supersedes MIL-S-16293).

KECKLEY

TECHNICAL DATA
DIMENSIONS AND WEIGHTS

Style A-7

Y-Strainer, 125 lb. Flanged
Cast Iron (ASTM A 126, Class B)

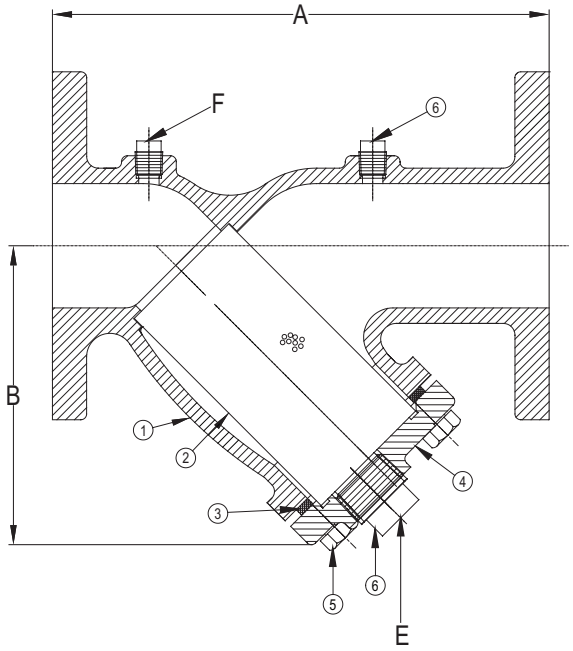

PARTS LIST		
ITEM	DESCRIPTION	MATERIAL
1	Body	Cast Iron (ASTM A 126, Class B)
2	Screen	Stainless Steel (304)
3	Gasket	Composition
4	Cover	Cast Iron (ASTM A 126, Class B)
5	Hex Head Cap Screw	Steel
6	Plug	Carbon Steel (ASTM A 105)

STANDARD SCREENS SUPPLIED

SIZE		SCREEN GAGE	SCREEN PERFORATION					
			FOR STEAM		OPEN AREA	FOR LIQUID		OPEN AREA
in	mm		in	mm		in	mm	
2 to 4	50 to 100	28	3/64	1.2	33%	1/16	1.6	30%
5 to 10	125 to 250	24	3/64	1.2	33%	1/8	3.2	43%
12	300	24	1/16	1.6	30%	1/8	3.2	43%
14 & up	350 & UP	20	1/8	3.2	43%	1/8	3.2	43%

Standard screens supplied are for **liquid service**, unless otherwise specified.
Options: Other perforations, meshes, and screen materials are available.

SIZE		DIMENSIONS								WEIGHTS	
		A		B		E		F			
in	mm	in	mm	in	mm	in	mm	in	mm	lbs	kgs
2	50	7-7/8	200	5-1/16	129	1/2	15	1/4	8	17	8
2-1/2	65	10	254	6-1/8	156	1	25	1/4	8	24	11
3	80	10-1/8	257	6-9/16	167	1	25	1/4	8	31	14
4	100	12-1/8	308	8-1/16	205	1-1/2	40	1/4	8	50	23
5	125	15-5/8	397	11	278	2	50	1/4	8	86	39
6	150	18-1/2	470	12-5/8	322	2	50	1/4	8	114	52
8	200	21-5/8	549	15-5/8	396	2	50	1/4	8	203	92
10	250	25-3/4	654	17-3/4	451	2	50	1/4	8	293	133
12	300	29-7/8	759	21-5/16	542	2	50	1/4	8	489	222
14	350	33-1/4	846	26-3/4	680	2	50	N/A		772	350
16	400	38-3/4	984	30-1/8	765	2	50	N/A		994	451
18	450	43-1/2	1105	33-1/4	845	2	50	N/A		1379	626
20	500	49-1/2	1257	39-1/4	997	2	50	N/A		1652	750
24	600	55-13/16	1418	41	1041	2	50	N/A		3400	1542

Certified dimensional drawings are available upon request.
†This table reflects only the nearest metric equivalents.

FLOW COEFFICIENTS

Size	C_V	Size	C_V	Size	C_V	Size	C_V
2"	62	5"	364	12"	2261	20"	8064
2 ½"	98	6"	585	14"	3479		
3"	155	8"	942	16"	5060		
4"	269	10"	1572	18"	6008		

TOTAL SCREEN AREA

Size	(in²)	Size	(in²)	Size	(in²)	Size	(in²)
2"	28.84	5"	143.94	12"	596.07	20"	2768
2 ½"	45.47	6"	237.76	14"	1041		
3"	54.68	8"	345.30	16"	1341		
4"	91.12	10"	537.30	18"	1697		

*See DETERMINING RATIOS on page S5 of the Strainer Information Section for calculating NET FREE AREA of the screen to inside pipe area.

PRESSURE vs. TEMPERATURE CHART

125# Flanged Cast Iron (ASTM A 126, Class B)
Suitable for use with pipe sizes up to 12"

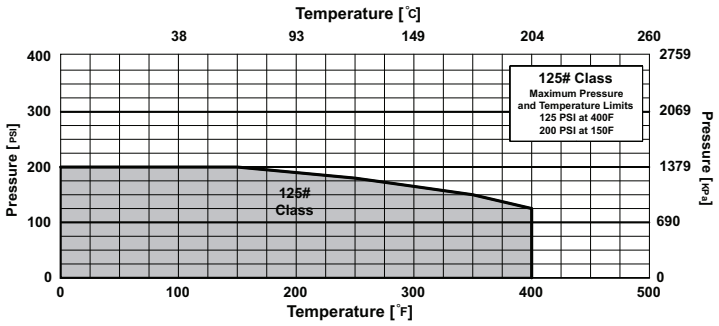

*In Accordance with ASME B16.1

KECKLEY

Style A

Y-Strainer
Cast Iron (ASTM A 126, Class B)
250 lb.

Cast Iron Y-Strainer

APPLICATIONS

Steam, water, oil or gas where protection from foreign matter in a pipeline is required.

CONSTRUCTION

The Keckley Style A strainers are constructed from rugged cast iron castings that are machined to exacting specifications. These bodies have drilled flanges that are in accordance with ASME B16.1.

FEATURES

The Keckley Style A strainer features a machined groove in both the body and cover for proper screen alignment and to ensure accurate reseating when servicing is required. The gasket is a synthetic fiber that is compressed between the body and cover for maximum strength and durability. Keckley Style A strainers can be furnished with a blow-off plug upon request.

SCREENS

Standard perforated 304 stainless steel screens are spot welded along the seam for maximum strength. Different size perforations and meshes are available in stainless steel, monel, and brass to meet specific media requirements. If the media is not indicated, screens for *water* will be supplied.

SELF CLEANING

Self cleaning is accomplished by opening the valve or drain plug connected to the blow-off port. **Warning:** See Maintenance Instructions on page S6 of the Strainer Information Section for additional precautions and detailed information on servicing the strainer.

WORKING PRESSURES - NON SHOCK

NOM. RATING	MEDIA	2” to 12”	50 mm to 300 mm
250# R.F. & D. (EX. HEAVY FLANGE)	STEAM	250 PSI @ 450ºF	1724 KPa @ 232ºC
	W.O.G.	500 PSI @ 150ºF	3449 KPa @ 66ºC
	MEDIA	**14” and 16”**	**350 mm and 400 mm**
	STEAM	200 PSI @ 406ºF	1379 KPa @ 208ºC
	W.O.G.	300 PSI @ 150ºF	2069 KPa @ 66ºC

GOVERNMENT/MILITARY SPECIFICATIONS

Style A cast iron flanged strainers meet or exceed government specification WW-S-2739 (Supersedes MIL-S-16293).

KECKLEY

TECHNICAL DATA
DIMENSIONS AND WEIGHTS

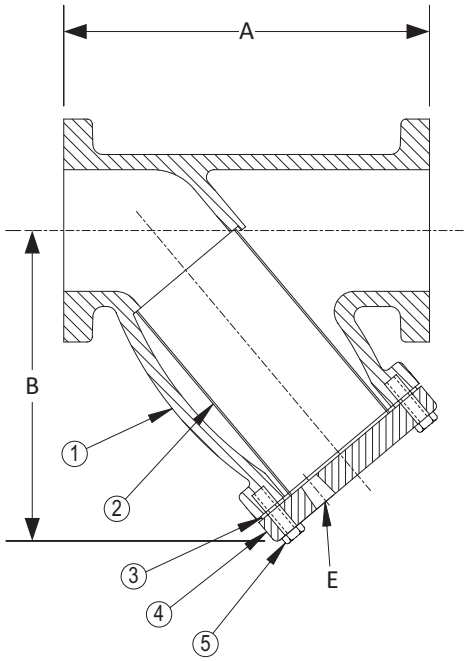

Style A

Y-Strainer, 250 lb. Flanged
Cast Iron (ASTM A 126, Class B)

PARTS LIST		
ITEM	DESCRIPTION	MATERIAL
1	Body	Cast Iron (ASTM A 126, Class B)
2	Screen	Stainless Steel (304)
3	Gasket	Composition
4	Cover	Cast Iron (ASTM A 126, Class B)
5	Hex Head Cap Screw	Steel

Optional: Blow-off Plug (Malleable Iron).

STANDARD SCREENS SUPPLIED

SIZE		SCREEN GAGE	SCREEN PERFORATION					
			FOR STEAM		OPEN AREA	FOR LIQUID		OPEN AREA
in	mm		in	mm		in	mm	
2 to 4	50 to 100	28	3/64	1.2	33%	1/16	1.6	30%
5 to 10	125 to 250	24	3/64	1.2	33%	1/8	3.2	43%
12	300	24	1/16	1.6	30%	1/8	3.2	43%
14 & 16	350 & 400	20	1/8	3.2	43%	1/8	3.2	43%

Standard screens supplied are for **liquid service**, unless otherwise specified.
Options: Other perforations, meshes, and screen materials are available.

SIZE		DIMENSIONS						WEIGHTS	
		A		B		E			
in	mm	in	mm	in	mm	in	mm	lbs	kgs
2	50	9-7/8	251	6-1/4	159	1/2	15	33	15
2-1/2	65	11-1/4	286	7-3/4	197	1	25	49	22
3	80	12-1/2	318	8-1/4	210	1	25	57	26
4	100	14-5/8	371	10-1/8	257	1-1/4	32	106	48
5	125	18	457	12-1/2	318	1-1/4	32	157	71
6	150	20-3/8	518	14-3/8	365	1-1/2	40	215	98
8	200	23-7/8	606	17-1/2	445	1-1/2	40	315	143
10	250	29-5/8	752	21	533	2	50	525	238
12	300	33-3/4	857	23-5/8	600	2	50	700	318
14	350	38	965	27-1/8	689	2	50	1400	635
16	400	42-3/8	1076	29-1/4	743	2	50	1850	839

Certified dimensional drawings are available upon request.
†This table reflects only the nearest metric equivalents.

PRESSURE vs. TEMPERATURE CHART

250# Flanged Cast Iron (ASTM A 126, Class B)
Suitable for use with pipe sizes up to 12"

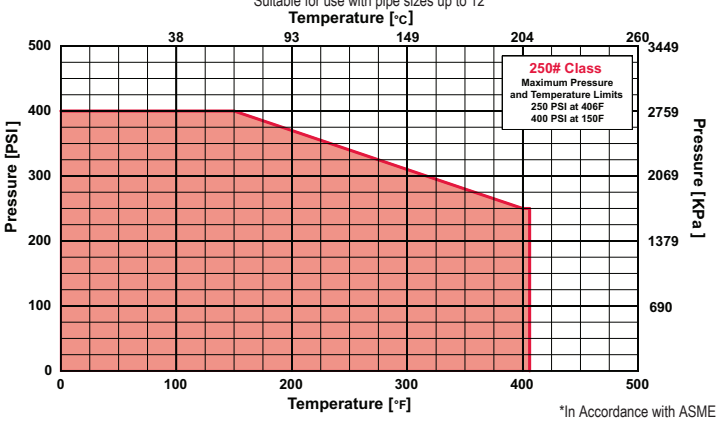

*In Accordance with ASME B16.1

KECKLEY

Style BDI

Y-Strainer
Ductile Iron (ASTM A 536, Grade 65-45-12)
300 lb. Threaded

Ductile Iron Y-Strainer

APPLICATIONS

Steam, water, oil or gas where protection from foreign matter in a pipeline is required.

CONSTRUCTION

The Keckley Style BDI stainers are constructed from rugged ductile iron castings that are machined to exacting specifications.

FEATURES

The Keckley Style BDI features a tapered bushing and is furnished standard with a NPT blow-off connection and can be supplied with an iron blow-off plug upon request.

SCREENS

Standard screens are 20 mesh 304 stainless steel and are spot welded for maximum strength. Different size perforations and meshes are available in stainless steel, monel, and brass to meet specific media requirements. If media is not indicated, screens for *water* will be supplied.

SELF CLEANING

Self cleaning is accomplished by opening the valve or drain plug connected to the blow-off port. **Warning:** See Maintenance Instructions on page S6 of the Strainer Information Section for additional precautions and detailed information on servicing the strainer.

WORKING PRESSURES - NON SHOCK

NOM. RATING	MEDIA	1/2" to 2"	15 mm to 50 mm
300# (Threaded)	STEAM	450 PSI @ 650ºF	3104 KPa @ 343ºC
	W.O.G.	640 PSI @ 100ºF	4414 KPa @ 38ºC

KECKLEY

TECHNICAL DATA
DIMENSIONS AND WEIGHTS

Style BDI

Y-Strainer, 300 lb. Threaded
Ductile Iron (ASTM A 536, Grade 65-45-12)

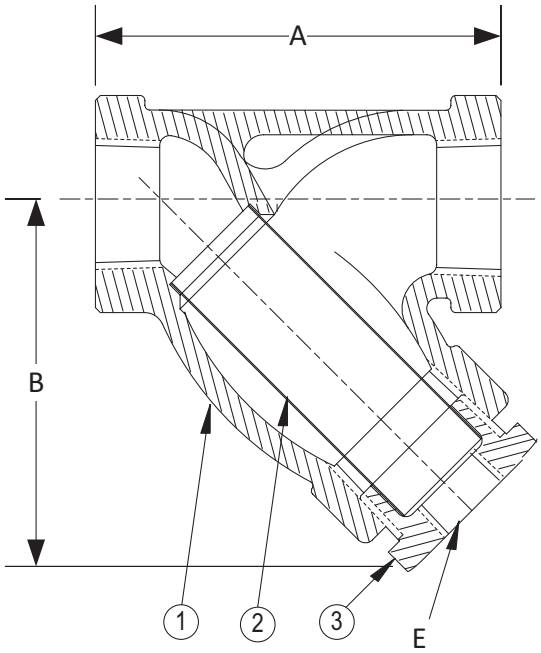

PARTS LIST		
ITEM	DESCRIPTION	MATERIAL
1	Body	Ductile Iron (ASTM A 536, Grade 65-45-12)
2	Screen	Stainless Steel (304)
3	Bushing	Ductile Iron

Optional: Blow-off Plug, Malleable Iron.

STANDARD SCREENS SUPPLIED

SIZE			SCREEN PERFORATION					
			FOR STEAM		OPEN AREA	FOR LIQ-UID		OPEN AREA
in	mm		in	mm		in	mm	

Options: Other meshes, perforations, and screen materials are available.

SIZE		DIMENSIONS						WEIGHTS	
		A		B		E			
in	mm	in	mm	in	mm	in	mm	lbs	kgs
1/2	15	3	76	2-5/8	67	3/8	10	2	0.9
3/4	20	4	102	3-5/8	92	1/2	15	3	1.4
1	25	4-7/8	124	4-1/2	114	3/4	20	4.5	2.0
1-1/4	32	5-1/8	130	4-3/4	121	3/4	20	6	2.7
1-1/2	40	5-3/4	146	4-7/8	124	1	25	8	3.6
2	50	7-1/4	184	5-3/4	146	1-1/4	32	15.5	7.0

†This table reflects only the nearest metric equivalents.

FLOW COEFFICIENTS

Size	C_V	Size	C_V	Size	C_V
1/2"	9.5	1"	30	1-1/2"	61
3/4"	18.7	1-1/4"	44.9	2"	98

TOTAL SCREEN AREA

Size	(in^2)	Size	(in^2)	Size	(in^2)
1/2"	5.50	1"	15.22	1-1/2"	23.37
3/4"	8.59	1-1/4"	18.69	2"	36.23

*See DETERMINING RATIOS on page S5 of the Strainer Information Section for calculating NET FREE AREA of the screen to inside pipe area.

Tensile Strength: 60/80,000 PSI
Yield Strength: 45/60,000 PSI
Elongation: 10/30%

Certified Dimensional Drawings are Available Upon Request.

KECKLEY

Cast Bronze Y-Strainer

Style F-150

Y-Strainer
Cast Bronze (ASTM B 584, C84400)
125 lb. Threaded

Style E-150

Y-Strainer
Cast Bronze (ASTM B 584, C84400)
125 lb. Solder Joint

APPLICATIONS

Steam, water, oil or gas where protection from foreign matter in a pipeline is required.

CONSTRUCTION

The Keckley Style F-150 & E-150 stainers are constructed from the finest bronze castings and are machined to exacting specifications.

Solder Joint Ends are in compliance with ASME B16.18 unless otherwise specified.

FEATURES

The Keckley Style F-150& E-150 strainers feature a machined seat in the body and cap for propper alignment and to ensure accurate reseating when servicing is required. These strainers have a straight threaded cap and are furnished standard with a NPT blow-off connection. The gasket is a flat fiber gasket that is compressed between the body and cap for maximum strength and durability. Keckley Style F-150 & E-150 strainers are furnished with a bronze blow-off plug unless otherwise specified.

SCREENS

Standard screens are 20 mesh 304 stainless steel through size 2”. Sizes 2-1/2”, 3” and 4” are furnished with 3/64” perforated 304 stainless steel screens. All screens are spot welded for maximum strength. Different size perforations and meshes are available in stainless steel, monel, and brass to meet specific media requirements.

SELF CLEANING

Self cleaning is accomplished by opening the valve or drain plug connected to the blow-off port. **Warning:** See Maintenance Instructions on page S6 of the Strainer Information Section for additional precautions and detailed information on servicing the strainer.

WORKING PRESSURES - NON SHOCK

NOM. RATING	MEDIA	1/4” to 3”	8 mm to 80 mm
125# (THREADED & SOLDER JOINT)	STEAM	125 PSI @ 400ºF	862 KPa @ 204ºC
	W.O.G.	200 PSI @ 150ºF	1379 KPa @ 66ºC

KECKLEY

TECHNICAL DATA
DIMENSIONS AND WEIGHTS

Style F-150 & E-150

Y-Strainer, 125 lb. Threaded & Solder Joint
Cast Bronze (ASTM B 584, C84400)

Style F-150
(Threaded)

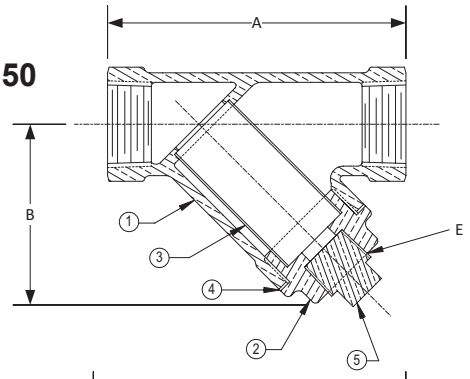

Style E-150
(Solder Joint)

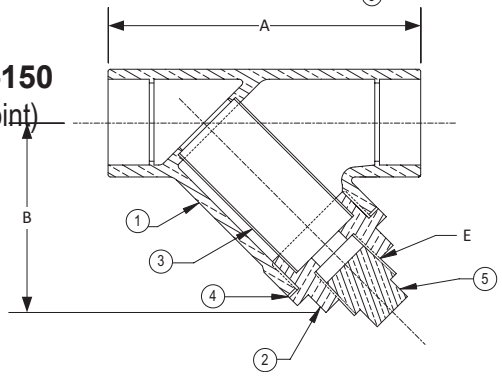

PARTS LIST		
ITEM	DESCRIPTION	MATERIAL
1	Body	Bronze (ASTM A B584, C84400)
2	Cap	Bronze (ASTM A B584, C84400)
3	Screen	Stainless Steel (304)
4	Gasket	Composition
5	Plug	Bronze (ASTM A B584, C84400)

STANDARD SCREENS SUPPLIED

SIZE			SCREEN PERFORATION					
			FOR STEAM		OPEN AREA	FOR LIQ-UID		OPEN AREA
in	mm		in	mm		in	mm	
1/4 to 2	8 to 50	20 MESH STAINLESS STEEL						49%

Options: Other meshes, perforations, and screen materials are available.

SIZE		DIMENSIONS												WEIGHTS			
		A				B				E							
		F-150		E-150		F-150		E-150		F-150		E-150		F-150		E-150	
in	mm	in	mm	in	mm	in	mm	in	mm	in	mm	in	mm	lbs	kgs	lbs	kgs
1/4	8	3-3/16	81	3-3/8	86	2-1/4	57	2-1/4	57	3/8	10	3/8	10	0.80	0.4	0.75	0.3
3/8	10	3-3/16	81	3-3/8	86	2-1/4	57	2-1/4	57	3/8	10	3/8	10	0.80	0.4	0.75	0.3
1/2	15	3-3/16	81	3-3/8	86	2-1/4	57	2-1/4	57	3/8	10	3/8	10	0.80	0.4	0.75	0.3
3/4	20	3-15/16	100	4-1/4	108	2-5/8	67	2-5/8	67	3/8	10	3/8	10	1.20	0.5	1.00	0.5
1	25	4-1/2	114	5	127	3	76	3-3/16	81	1/2	15	1/2	15	1.80	0.8	2.25	1.0
1-1/4	32	5-5/16	135	5-7/8	149	3-9/16	90	3-3/4	95	1/2	15	1/2	15	2.70	1.2	2.75	1.2
1-1/2	40	6-3/16	157	6-7/8	175	4	102	4-1/8	105	1/2	15	1/2	15	3.60	1.6	3.25	1.5
2	50	7-1/2	191	8-5/8	219	4-5/8	117	5-1/8	130	1/2	15	1/2	15	5.60	2.5	5.75	2.6
2-1/2	65	9	229	10-3/8	264	5-1/2	140	5-3/4	146	1/2	15	1/2	15	10.00	4.5	8.50	3.9
3	80	10-1/8	257	11-3/4	298	6-1/8	156	6-1/2	165	1/2	15	1/2	15	13.50	6.1	12.50	5.7

Certified dimensional drawings are available upon request.
†This table reflects only the nearest metric equivalents.

FLOW COEFFICIENTS

Size	C_V	Size	C_V	Size	C_V
1/4"	9.5	1"	30	2-1/2"	129.7
3/8"	9.5	1-1/4"	44.9	3"	161.3
1/2"	9.5	1-1/2"	61		
3/4"	18.7	2"	98		

TOTAL SCREEN AREA

Size	(in²)	Size	(in²)	Size	(in²)
1/4"	3.09	1"	9.54	2-1/2"	46.98
3/8"	3.09	1-1/4"	14.26	3"	62.87
1/2"	3.09	1-1/2"	19.94		
3/4"	7.36	2"	33.39		

*See DETERMINING RATIOS on page S5 of the Strainer Information Section for calculating NET FREE AREA of the screen to inside pipe area.

PRESSURE vs. TEMPERATURE CHART

125# Threaded & Solder Joint Bronze (ASTM B 548, C84400)

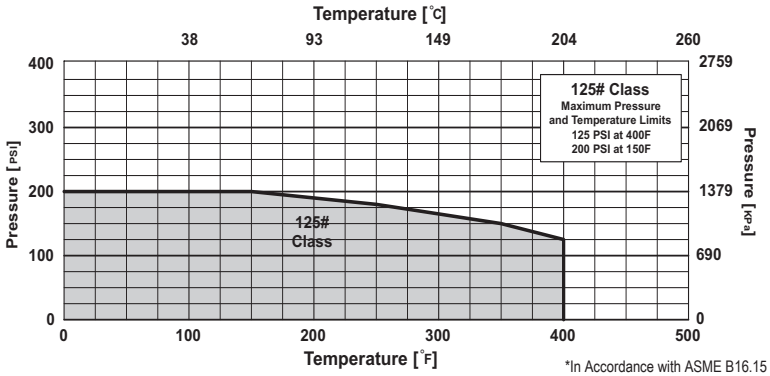

*In Accordance with ASME B16.15

KECKLEY

Cast Bronze Y-Strainer (Lead Free*)

Style F7

Y-Strainer
Cast Bronze (ASTM B 584, C89833)
125 lb. Threaded

*The wetted surface of this product contacted by consumable water contains less than 0.25% of lead by weight.

Style E7

Y-Strainer
Cast Bronze (ASTM B 584, C89833)
125 lb. Solder Joint

*The wetted surface of this product contacted by consumable water contains less than 0.25% of lead by weight.

APPLICATIONS

Steam, water, oil or gas where protection from foreign matter in a pipeline is required.

CONSTRUCTION

The Keckley Style F7 & E7 stainers are constructed from the finest bronze castings and are machined to exacting specifications.

Solder Joint Ends are in compliance with ASME B16.8 unless otherwise specified.

FEATURES

The Keckley Style F7 & E7 strainers feature a machined seat in the body and cap for propper alignment and to ensure accurate reseating when servicing is required. These strainers have a straight threaded cap and are furnished standard with a NPT blow-off connection. The gasket is a flat PTFE gasket that is compressed between the body and cap for maximum strength and durability. Keckley Style F7 & E7 strainers are furnished with a bronze blow-off plug unless otherwise specified.

SCREENS

Standard screens are 20 mesh 304 stainless steel through size 2”. Sizes 2-1/2”, 3” and 4” are furnished with 3/64” perforated 304 stainless steel screens. All screens are spot welded for maximum strength. Different size perforations and meshes are available in stainless steel, monel, and brass to meet specific media requirements.

SELF CLEANING

Self cleaning is accomplished by opening the valve or drain plug connected to the blow-off port. **Warning:** See Maintenance Instructions on page S6 of the Strainer Information Section for additional precautions and detailed information on servicing the strainer.

WORKING PRESSURES - NON SHOCK

NOM. RATING	MEDIA	1/4” to 3”	8 mm to 80 mm
125# (THREADED & SOLDER JOINT)	STEAM	125 PSI @ 400ºF	862 KPa @ 204ºC
	W.O.G.	200 PSI @ 150ºF	1379 KPa @ 66ºC

KECKLEY

TECHNICAL DATA
DIMENSIONS AND WEIGHTS

Style F7 & E7

Y-Strainer, 125 lb. Threaded & Solder Joint
Cast Bronze (ASTM B 584, C89833) Lead Free*

Style F7
(Threaded)

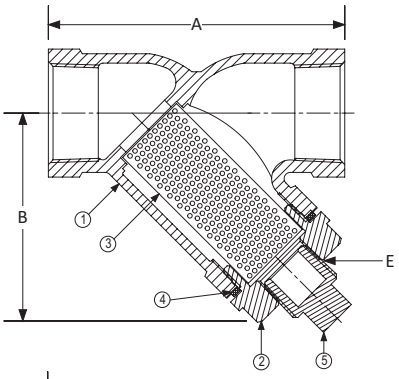

Style E7
(Solder Joint)

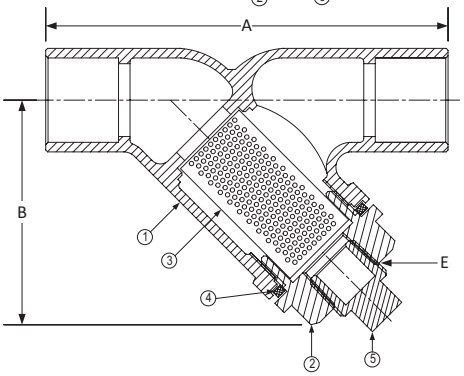

PARTS LIST		
ITEM	DESCRIPTION	MATERIAL
1	Body	Bronze (ASTM B 584, C89833)
2	Cap	Bronze (ASTM B 584, C89833)
3	Screen	Stainless Steel (304)
4	Gasket	PTFE
5	Plug	Bronze (ASTM B 584, C89833)

*The wetted surface of this product contacted by consumbale water contains less than 0.25% of lead by weight.

STANDARD SCREENS SUPPLIED

SIZE		SCREEN GAGE	SCREEN PERFORATION					
			FOR STEAM		OPEN AREA	FOR LIQUID		OPEN AREA
in	mm		in	mm		in	mm	
1/4 to 2	8 to 50	20 MESH STAINLESS STEEL						49%
2-1/2 to 3	65 & 80	28	3/64	1.2	33%	3/64	1.2	33%

Options: Other meshes, perforations, and screen materials are available.

SIZE		DIMENSIONS												WEIGHTS			
		A				B				E							
		F7		E7		F7		E7		F7		E7		F7		E7	
in	mm	in	mm	in	mm	in	mm	in	mm	in	mm	in	mm	lbs	kgs	lbs	kgs
1/4	8	2-9/16	65	2-1/16	53	1-7/8	48	1-3/8	35	1/4	8	1/8	6	0.63	0.29	0.20	0.09
3/8	10	2-9/16	65	3-1/8	80	1-7/8	48	1-13/16	46	1/4	8	1/4	8	0.58	0.26	0.46	0.21
1/2	15	2-9/16	65	3-1/8	80	1-7/8	48	1-15/16	49	1/4	8	1/4	8	0.55	0.25	0.48	0.22
3/4	20	3	77	4-1/8	105	2-1/4	57	2-5/16	59	3/8	10	3/8	10	0.87	0.39	0.86	0.39
1	25	3-3/4	95	4-15/16	125	2-7/16	62	2-5/8	67	1/2	15	1/2	15	1.38	0.63	1.25	0.57
1-1/4	32	4-7/16	113	5-11/16	145	3-3/8	86	3-1/4	83	1/2	15	1/2	15	2.90	1.32	2.06	0.93
1-1/2	40	4-7/8	123	6-5/8	170	3-9/16	91	3-11/16	94	3/4	20	3/4	20	3.27	1.48	2.93	1.33
2	50	5-1/4	133	8-1/4	210	4-5/16	110	4-1/2	114	1	25	1	25	4.99	2.26	5.48	2.49
2-1/2	65	6-15/16	175	9-3/4	247.5	5	127	5-3/8	137	1-1/4	32	1-1/4	32	9.88	4.48	10.16	4.61
3	80	7-7/8	200	11-3/8	289	5-5/8	143	6-1/8	156	1-1/2	40	1-1/2	40	14.20	6.44	14.30	6.49

Certified dimensional drawings are available upon request.
†This table reflects only the nearest metric equivalents.

FLOW COEFFICIENTS

Size	C_V	Size	C_V	Size	C_V
1/4"	9.5	1"	30	2-1/2"	129.7
3/8"	9.5	1-1/4"	44.9	3"	161.3
1/2"	9.5	1-1/2"	61		
3/4"	18.7	2"	98		

TOTAL SCREEN AREA

Size	(in^2)	Size	(in^2)	Size	(in^2)
1/4"	2.92	1"	6.70	2-1/2"	34.06
3/8"	2.92	1-1/4"	12.25	3"	47.01
1/2"	2.92	1-1/2"	14.58	(Total screen area listed are for Style F7)	
3/4"	4.34	2"	22.88		

*See DETERMINING RATIOS on page S5 of the Strainer Information Section for calculating NET FREE AREA of the screen to inside pipe area.

PRESSURE vs. TEMPERATURE CHART
125# Threaded & Solder Joint Bronze (ASTM B 584, C89833)

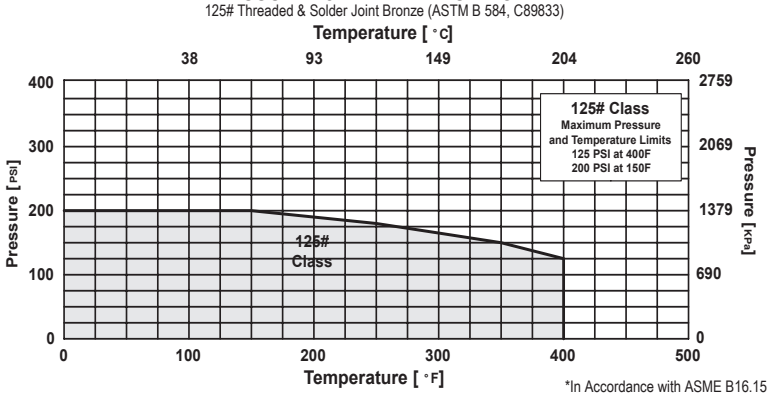

*In Accordance with ASME B16.15

KECKLEY

Cast Bronze Y-Strainer

Style F-300

Y-Strainer
Cast Bronze (ASTM B 62, C83600)
250 lb. Threaded

Style E-300

Y-Strainer
Cast Bronze (ASTM B 62, C83600)
250 lb. Solder Joint

APPLICATIONS

Steam, water, oil or gas where protection from foreign matter in a pipeline is required.

CONSTRUCTION

The Keckley Style F-300 & E-300 stainers are constructed from the finest bonze castings and are machined to exacting specifications.

Solder Joint Ends are in compliance with ASME B16.18 unless otherwise specified.

FEATURES

The Keckley Style F-300 & E-300 strainers feature a machined seat in the body and cap for propper alignment and to ensure accurate reseating when servicing is required. These strainers have a straight threaded cap and are furnished standard with a NPT blow-off connection. The gasket is a flat copper gasket that is compressed between the body and cap for a maximum strength and durability. Keckley Style F-300 & E-300 strainers can be furnished with a bronze blow-off plug upon request.

SCREENS

Standard perforated 304 stainless steel screens are spot welded along the seam for maximum strength. Different size perforations and meshes are available in stainless steel, monel, and brass to meet specific media requirements. If media is not indicated, screens for *water* will be supplied.

SELF CLEANING

Self cleaning is accomplished by opening the valve or drain plug connected to the blow-off port. **Warning:** See Maintenance Instructions on page S6 of the Strainer Information Section for additional precautions and detailed information on servicing the strainer.

WORKING PRESSURES - NON SHOCK

NOM. RATING	MEDIA	1/4" to 3"	8 mm to 80 mm
250# (THREADED & SOLDER JOINT)	STEAM	235 PSI @ 400ºF	1621 KPa @ 204ºC
	W.O.G.	400 PSI @ 150ºF 250 PSI @ 400ºF	2759 KPa @ 66ºC 1724 KPa @ 204ºC

GOVERNMENT/MILITARY SPECIFICATIONS

Specification: NAVSHIPS 810-841499.
Consult Factory for additional requirements.

KECKLEY

TECHNICAL DATA
DIMENSIONS AND WEIGHTS

Style F-300 & E-300

Y-Strainer, 250 lb. Threaded & Solder Joint Cast Bronze (ASTM B 62, C83600)

Style F-300
(Threaded)

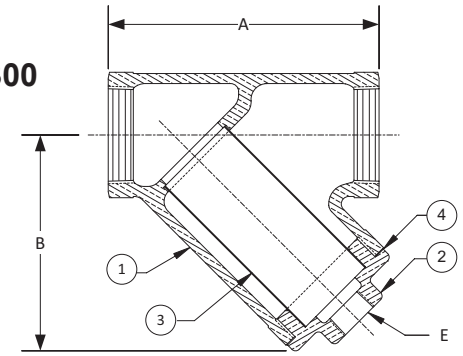

Style E-300
(Solder Joint)

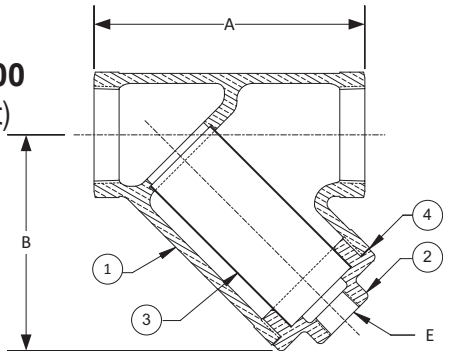

PARTS LIST		
ITEM	DESCRIPTION	MATERIAL
1	Body	Bronze (ASTM B 62, C83600)
2	Cap	Bronze (ASTM B 62, C83600)
3	Screen	Stainless Steel (304)
4	Gasket	Copper

Optional: Blow-off Plug, Brass.

STANDARD SCREENS SUPPLIED

SIZE			SCREEN PERFORATION					
			FOR STEAM		OPEN AREA	FOR LIQ-UID		OPEN AREA
in	mm		in	mm		in	mm	

Standard screens supplied are for **liquid service**, unless otherwise specified.
Options: Other perforations, meshes, and screen materials are available.

SIZE		DIMENSIONS												WEIGHTS			
		A				B				E							
		F-300		E-300		F-300		E-300		F-300		E-300		F-300		E-300	
in	mm	in	mm	in	mm	in	mm	in	mm	in	mm	in	mm	lbs	kgs	lbs	kgs
1/4	8	2-9/16	65	2-9/16	65	2	51	2	51	1/8	6	1/8	6	0.75	0.3	0.75	0.3
3/8	10	2-9/16	65	2-9/16	65	2	51	2	51	1/8	6	1/8	6	0.75	0.3	0.75	0.3
1/2	15	2-15/16	75	2-9/16	65	2-1/8	54	2	51	1/8	6	1/8	6	1.00	0.5	0.75	0.3
3/4	20	3-3/8	86	2-15/16	75	2-11/16	68	2-1/8	54	1/4	8	1/8	6	1.50	0.7	1.00	0.5
1	25	4-1/8	105	3-3/8	86	3	76	2-11/16	68	1/4	8	1/4	8	2.50	1.1	1.50	0.7
1-1/4	32	4-13/16	122	4-1/8	105	3-3/4	95	3	76	3/8	10	1/4	8	4.25	1.9	2.50	1.1
1-1/2	40	5-3/8	137	4-13/16	122	4-3/8	111	3-3/4	95	1/2	15	3/8	10	6.25	2.8	4.25	1.9
2	50	6-5/8	168	5-3/8	137	5-1/2	140	4-3/8	111	3/4	20	1/2	15	11.00	5.0	6.25	2.8
2-1/2	65	8-1/4	210	6-5/8	168	6-3/4	171	5-1/2	140	1-1/4	32	3/4	20	17.75	8.1	11.00	5.0
3	80	9-5/8	244	8-1/4	210	7-1/8	181	6-3/4	171	1-1/2	40	1-1/4	32	25.75	11.7	17.75	8.1

Certified dimensional drawings are available upon request.
†This table reflects only the nearest metric equivalents.

FLOW COEFFICIENTS

Size	C_V	Size	C_V	Size	C_V
1/4"	9.5	1"	30	2-1/2"	129.7
3/8"	9.5	1-1/4"	44.9	3"	161.3
1/2"	9.5	1-1/2"	61	*(The flow coefficients listed are for Style F-300)*	
3/4"	18.7	2"	98		

TOTAL SCREEN AREA

Size	(in²)	Size	(in²)	Size	(in²)
1/4"	2.36	1"	9.54	2-1/2"	45.09
3/8"	2.36	1-1/4"	14.11	3"	56.56
1/2"	3.44	1-1/2"	19.88	*(Total screen area listed are for Style F-300)*	
3/4"	5.67	2"	32.97		

*See DETERMINING RATIOS on page S5 of the Strainer Information Section for calculating NET FREE AREA of the screen to inside pipe area.

PRESSURE vs. TEMPERATURE CHART

250# Threaded & Solder Joint Cast Bronze (ASTM B 62, C83600)

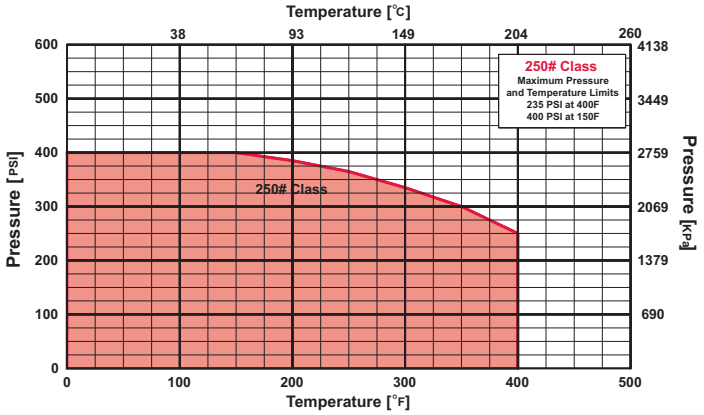

*In Accordance with ASME B16.15

KECKLEY

Style BA

Y-Strainer
Cast Bronze (ASTM B 62, C83600)
150 lb. & 300 lb. Flanged

Cast Bronze Y-Strainer

APPLICATIONS

Steam, water, oil or gas where protection from foreign matter in a pipeline is required.

CONSTRUCTION

The Keckley Style BA stainers are constructed from the finest bronze castings and are machined to exacting specifications. These bodies have drilled flanges that are in accordance with ASME B16.24.

FEATURES

The Keckley Style BA strainer features a machined groove in both the body and cover for proper alignment and to ensure accurate reseating when servicing is required. The gasket is a flexible laminated sheet that is compressed between the body and cover for maximum strength and durability. All Keckley Style BA strainers can be supplied with a brass blow-off plug upon request.

SCREENS

Standard perforated brass screens are spot welded along the seam for maximum strength. Different size perforations and meshes are available in stainless steel, monel, and brass to meet specific media requirements. If media is not indicated, screens for *water* will be supplied.

SELF CLEANING

Self cleaning is accomplished by opening the valve or drain plug connected to the blow-off port. **Warning:** See Maintenance Instructions on page S6 of the Strainer Information Section for additional precautions and detailed information on servicing the strainer.

WORKING PRESSURES - NON SHOCK

NOM. RATING	MEDIA	2” to 6”	50 mm to 150 mm
150# F.F. & D. (STANDARD FLANGE)	STEAM	150 PSI @ 406ºF	1035 KPa @ 208ºC
	W.O.G.	225 PSI @ 150ºF	1552 KPa @ 66ºC
NOM. RATING	**MEDIA**	**2” to 6”**	**50 mm to 150 mm**
300# F.F. & D. (EX. HEAVY FLANGE)	STEAM	300 PSI @ 406ºF	2069 KPa @ 208ºC
	W.O.G.	500 PSI @ 150ºF	3449 KPa @ 66ºC

KECKLEY

TECHNICAL DATA
DIMENSIONS AND WEIGHTS

Style BA

Y-Strainer, 150 lb. & 300 lb. Flanged
Cast Bronze (ASTM B 62, C83600)

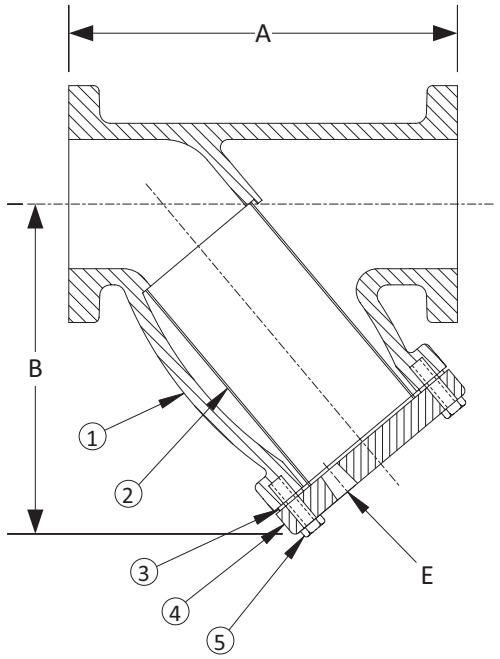

PARTS LIST		
ITEM	DESCRIPTION	MATERIAL
1	Body	Cast Bronze (ASTM B 62, C83600)
2	Screen	Brass
3	Gasket	Composition
4	Cover	Cast Bronze (ASTM B 62, C83600)
5	Hex Head Cap Screws	Steel

Optional: Blow-off Plug, Brass.

STANDARD SCREENS SUPPLIED

SIZE			SCREEN PERFORATION					
			FOR STEAM		OPEN AREA	FOR LIQ-UID		OPEN AREA
in	mm		in	mm		in	mm	
2 to 4	50 to 100	28	3/64	1.2	33%	1/16	1.6	30%

Standard screens supplied are for **liquid service**, unless otherwise specified.
Options: Other perforations, meshes, and screen materials are available.

SIZE		DIMENSIONS								WEIGHTS			
		A				B		E					
		150#		300#		150# & 300#		150# & 300#		150#		300#	
in	mm	in	mm	in	mm	in	mm	in	mm	lbs	kgs	lbs	kgs
2	50	8-1/8	206	8-5/8	219	8-1/4	210	1-1/4	32	34	15	39	18
2-1/2	65	9-5/8	244	10-1/8	257	8-1/2	216	1-1/4	32	40	18	57	26
3	80	10-3/8	264	10-15/16	278	8-1/2	216	1-1/4	32	51	23	74	34
4	100	14-7/8	378	15-1/4	387	12-1/2	318	2	50	109	49	149	68
5	125	16	406	16-3/4	425	14-1/2	368	2	50	161	73	221	100
6	150	18-9/16	471	18-1/8	460	15	381	2	50	198	88	253	115

Certified dimensional drawings are available upon request.
†This table reflects only the nearest metric equivalents.

FLOW COEFFICIENTS

Size	C_V	Size	C_V	Size	C_V
2"	62	3"	155	5"	364
2-1/2"	98	4"	269	6"	585

TOTAL SCREEN AREA

Size	(in^2)	Size	(in^2)	Size	(in^2)
2"	51.55	3"	85.86	5"	219.79
2-1/2"	70.01	4"	154.98	6"	245.08

*See DETERMINING RATIOS on page S5 of the Strainer Information Section for calculating NET FREE AREA of the screen to inside pipe area.

PRESSURE vs. TEMPERATURE CHART

150# & 300# Flanged Cast Bronze (ASTM B 62, C83600)

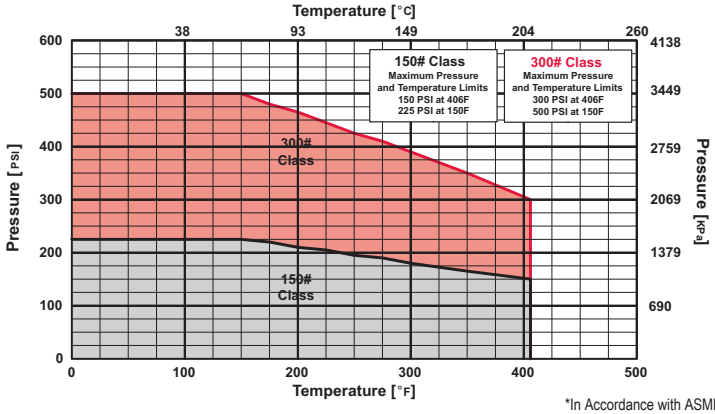

*In Accordance with ASME B16.24

KECKLEY

Style BA-7

Y-Strainer

Nickel Aluminum Bronze
(ASTM B 148, C95800)

150 lb. & 300 lb. Flanged

Cast Nickel Aluminum Bronze Y-Strainer

APPLICATIONS

Steam, water, oil or gas where protection from foreign matter in a pipeline is required.

CONSTRUCTION

The Keckley Style BA-7 stainers are constructed from rugged nickel aluminum bronze castings and are machined to exacting specifications. These bodies have drilled flanges that are in accordance with ASME B16.24. All flanges come standard with back-faced bolt holes.

FEATURES

The Keckley Style BA-7 strainer features a machined groove in both the body and cover for proper screen alignment and to ensure accurate reseating when servicing is required. The gasket is spiral wound 316 stainless steel and is compressed between the body and cover (for maximum strength and durability) and designed for high pressure and high temperature service. All Keckley Style BA-7 strainers have cap screws and can be furnished with a brass blow-off plug upon request.

SCREENS

Standard perforated 304 stainless steel screens are spot welded along the seam for maximum strength. Different size perforations and meshes are available in stainless steel, monel, and brass to meet specific media requirements. If media is not indicated, screens for *water* will be supplied.

SELF CLEANING

Self cleaning is accomplished by opening the valve or drain plug connected to the blow-off port. **Warning:** See Maintenance Instructions on page S6 of the Strainer Information Section for additional precautions and detailed information on servicing the strainer.

WORKING PRESSURES - NON SHOCK

NOM. RATING	MEDIA	1/2" to 12"	15 mm to 300 mm
150# F.F. & D. (STANDARD FLANGE)	STEAM	150 PSI @ 225ºF	1034 KPa @ 107ºC
	W.O.G.	195 PSI @ 100ºF	1344 KPa @ 38ºC
NOM. RATING	**MEDIA**	**1/2" to 12"**	**15 mm to 300 mm**
300# F.F. & D. (EX. HEAVY FLANGE)	STEAM	360 PSI @ 500ºF	2482 KPa @ 260ºC
	W.O.G.	515 PSI @ 100ºF	3551 KPa @ 38ºC

KECKLEY

TECHNICAL DATA
DIMENSIONS AND WEIGHTS

Style BA-7

Y-Strainer, 150 lb. & 300 lb. Flanged
Cast Nickel Aluminum Bronze (ASTM B 148, C95800)

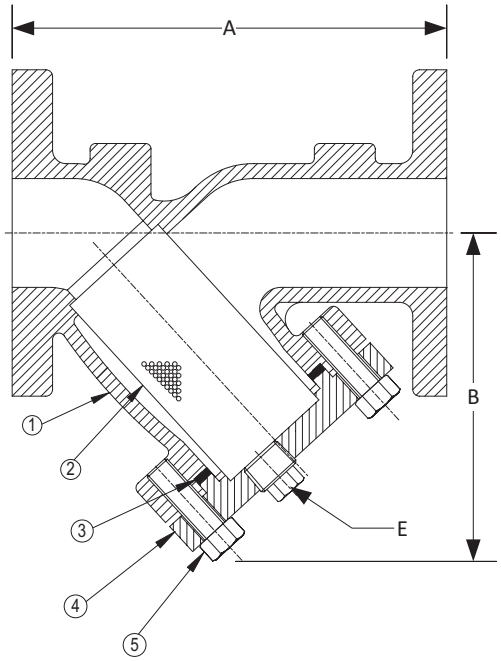

PARTS LIST		
ITEM	DESCRIPTION	MATERIAL
1	Body	Nickel Aluminum Bronze (ASTM B 148, C95800)
2	Screen	Stainless Steel (304)
3	Gasket	Spiral Wound Stainless Steel (304)
4	Cover	Nickel Aluminum Bronze (ASTM B 148, C95800)
5	Cap Screw	Stainless Steel (ASTM A 193, Grade B8)

Optional: Blow-off Plug, Brass.

STANDARD SCREENS SUPPLIED

SIZE		SCREEN GAGE	SCREEN PERFORATION					
			FOR STEAM		OPEN AREA	FOR LIQUID		OPEN AREA
in	mm		in	mm		in	mm	
1/2 to 4	15 to 100	28	3/64	1.2	33%	1/16	1.6	30%
5 to 10	125 to 250	22	3/64	1.2	33%	1/8	3.2	43%
12	300	22	1/16	1.6	30%	1/8	3.2	43%

Standard screens supplied are for **liquid service**, unless otherwise specified.
Options: Other perforations, meshes, and screen materials are available.

SIZE		DIMENSIONS										WEIGHTS			
		A				B				E					
		150#		300#		150#		300#		150# & 300#		150#		300#	
in	mm	in	mm	in	mm	in	mm	in	mm	in	mm	lbs	kgs	lbs	kgs
1/2	15	5-7/8	149	6	152	3-1/4	83	3-1/4	83	3/8	10	7	3.18	12	5.4
3/4	20	7-3/8	187	7-13/16	198	3-3/4	95	3-3/4	95	1/2	15	11	4.99	18	8.1
1	25	7-3/8	187	7-13/16	198	4-5/16	110	3-5/8	92	1/2	15	11	4.99	18	8.1
1-1/4	32	6-5/8	168	8	203	4-5/16	110	4-1/2	114	1/2	15	12	5.44	26	11
1-1/2	40	6-11/16	170	8-1/8	206	4-5/16	110	4-3/4	121	1/2	15	14	6.00	26	11
2	50	7-7/8	200	9	229	5-1/4	133	6	152	1/2	15	18	8.16	28	12.7
2-1/2	65	9-3/4	248	10-5/8	270	6-1/2	165	7-3/8	187	1	20	37	16.34	48	21
3	80	10	254	12-1/2	318	7	178	9-1/16	230	1-1/4	32	40	18.06	75	34
4	100	12-1/8	308	15-1/8	384	8-1/4	210	10-7/8	276	1-1/2	40	67	30.20	110	50
5	125	15-1/2	394	18-5/8	479	11-1/4	286	13-9/16	344	2	50	99	44.52	164	74
6	150	18-1/2	470	19-1/8	486	13-1/2	343	15-7/8	403	2	50	134	60.48	212	96
8	200	24	610	25-3/16	640	16-1/2	413	16-1/2	413	2	50	229	103.45	359	163
10	250	27-5/8	702	29-1/8	740	19-3/8	492	19-3/8	492	2	50	397	180.03	493	224
12	300	32-1/2	826	34	864	22-5/8	575	22-5/8	575	2	50	532	240.89	938	425

Larger sizes available upon request.
Certified dimensional drawings are available upon request.
†This table reflects only the nearest metric equivalents.

TOTAL SCREEN AREA

Size	(in^2)	Size	(in^2)	Size	(in^2)	Size	(in^2)
1/2"	--	1-1/2"	18.66	4"	88.15	10"	564.46
3/4"	--	2"	26.90	5"	159.01	12"	665.70
1"	--	2-1/2"	46.88	6"	235.95	*(Total screen area listed for 150 lb. class only)*	
1-1/4"	--	3"	59.16	8"	360.05		

*See DETERMINING RATIOS on page S5 of the Strainer Information Section for calculating NET FREE AREA of the screen to inside pipe area.

KECKLEY

Style SB-7

Y-Strainer
Carbon Steel (ASTM A 216, Grade WCB)
600 lb. Threaded
600 lb. Socket Weld

Cast Carbon Steel Y-Strainer

APPLICATIONS

Steam, water, oil or gas where protection from foreign matter in a pipeline is required.

CONSTRUCTION

The Keckley Style SB-7 stainers are constructed from rugged carbon steel castings that are machined to exacting specifications.

Socket Weld bore is in compliance with ASME B16.11 unless otherwise specified.

FEATURES

The Keckley Style SB-7 strainer features a machined groove in the body and cap for proper alignment and to ensure accurate reseating when servicing is required. This strainer has a straight threaded cap and is furnished standard with a NPT blow-off connection. The gasket is 304 stainless steel spiral wound and is compressed between the body and cap (for maximum strength and durability) and designed for both high pressure and high temperature service. Keckley Style SB-7 strainers can be supplied with a carbon steel blow-off plug upon request.

SCREENS

Standard perforated 304 stainless steel screens are spot welded along the seam for maximum strength. Different size perforations and meshes are available in stainless steel, monel, and brass to meet specific media requirements. If media is not indicated, screens for *steam* will be supplied.

SELF CLEANING

Self cleaning is accomplished by opening the valve or drain plug connected to the blow-off port. **Warning:** See Maintenance Instructions on page S6 of the Strainer Information Section for additional precautions and detailed information on servicing the strainer.

WORKING PRESSURES - NON SHOCK

NOM. RATING	MEDIA	1/4" to 3"	8 mm to 80 mm
600# (THREADED & SOCKET WELD)	STEAM	600 PSI @ 838ºF	4138 KPa @ 448ºC
	W.O.G.	1480 PSI @ 100ºF	10208 KPa @ 38ºC

KECKLEY

TECHNICAL DATA
DIMENSIONS AND WEIGHTS

Style SB-7

Y-Strainer, 600 lb. Threaded & Socket Weld Carbon Steel (ASTM A 216, Grade WCB)

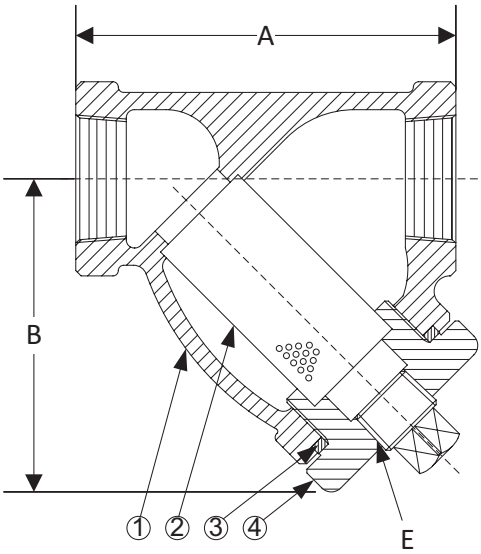

Threaded

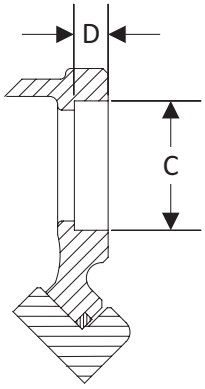

Socket Weld

PARTS LIST		
ITEM	DESCRIPTION	MATERIAL
1	Body	Carbon Steel (ASTM A 216, Grade WCB)
2	Screen	Stainless Steel (304)
3	Gasket	Spiral Wound Stainless Steel (304)
4	Cap	Carbon Steel (ASTM A 216, Grade WCB)

Optional: Blow-off Plug, Carbon Steel (ASTM A 105).
*Optional Body Materials Available in LCB, WC6, and WC9.

STANDARD SCREENS SUPPLIED

SIZE			SCREEN PERFORATION					
			FOR STEAM		OPEN AREA	FOR LIQ-UID		OPEN AREA
in	mm		in	mm		in	mm	

Standard screens supplied are for **steam service**, unless otherwise specified.
Options: Other perforations, meshes, and screen materials are available.

SIZE		DIMENSIONS										WEIGHTS	
		A		B		C		D		E			
in	mm	in	mm	in	mm	in	mm	in	mm	in	mm	lbs	kgs
1/4	8	2-15/16	75	2-7/16	62	0.555	14	3/8	10	1/4	8	2	0.76
3/8	10	2-15/16	75	2-7/16	62	0.690	18	3/8	10	1/4	8	2	0.76
1/2	15	2-15/16	75	2-7/16	62	0.855	22	3/8	10	1/4	8	2	0.76
3/4	20	3-11/16	94	3	76	1.065	27	1/2	13	3/8	10	3	1.21
1	22	4-9/16	116	4-5/16	110	1.330	34	1/2	13	3/8	10	6	2.33
1-1/4	32	4-15/16	125	4-3/16	106	1.675	43	1/2	13	3/4	20	7	3.02
1-1/2	40	5-9/16	141	4-11/16	119	1.915	49	1/2	13	3/4	20	9	3.98
2	50	6-15/16	176	6-1/4	159	2.406	61	5/8	16	1	25	15	6.80
2-1/2	65	12	305	9-3/8	238	2.906	74	5/8	16	1-1/4	32	34	15.03
3	80	12	305	9-3/8	238	3.535	90	5/8	16	1-1/4	32	36	15.97

Certified dimensional drawings are available upon request.
†This table reflects only the nearest metric equivalents.

FLOW COEFFICIENTS

Size	C_V	Size	C_V	Size	C_V
1/4"	9.5	1"	30	2-1/2"	129.7
3/8"	9.5	1-1/4"	44.9	3"	161.3
1/2"	9.5	1-1/2"	61		
3/4"	18.7	2"	98		

TOTAL SCREEN AREA

Size	(in^2)	Size	(in^2)	Size	(in^2)
1/4"	2.75	1"	10.08	2-1/2"	78.14
3/8"	2.75	1-1/4"	12.79	3"	78.14
1/2"	2.75	1-1/2"	16.33		
3/4"	4.71	2"	27.04		

*See DETERMINING RATIOS on page S5 of the Strainer Information Section for calculating NET FREE AREA of the screen to inside pipe area.

PRESSURE vs. TEMPERATURE CHART

600# Threaded & Socket Weld Carbon Steel (ASTM A 216, Grade WCB)

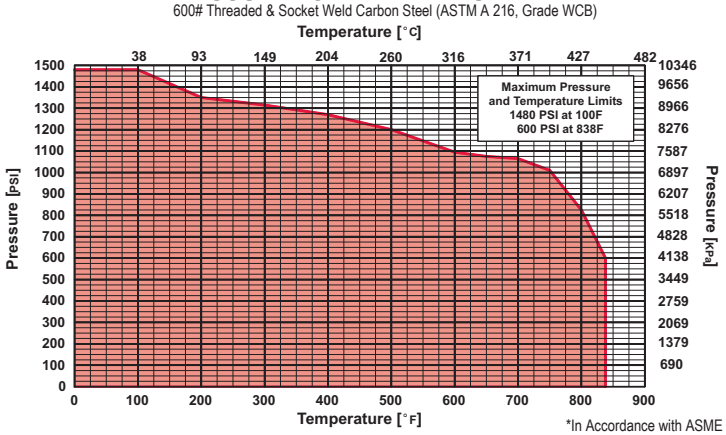

*In Accordance with ASME B16.34

KECKLEY

Style SB-7BC

Cast Carbon Steel Y-Strainer

Y-Strainer
Carbon Steel (ASTM A 216, Grade WCB)
600 lb. Threaded Bolted Cover
600 lb. Socket Weld Bolted Cover

APPLICATIONS

Steam, water, oil or gas where protection from foreign matter in a pipeline is required.

CONSTRUCTION

The Keckley Style SB-7BC stainers are constructed from rugged carbon steel castings that are machined to exacting specifications.

Socket Weld bore is in compliance with ASME B16.11 unless otherwise specified.

FEATURES

The Keckley Style SB-7BC strainer features a machined groove in the body and cap for proper alignment and to ensure accurate reseating when servicing is required. This strainer has a bolted cover and is furnished standard with a NPT blow-off connection. The gasket is 304 stainless steel spiral wound and is compressed between the body and cover (for maximum strength and durability) and designed for both high pressure and high temperature service. Keckley Style SB-7BC strainers can be supplied with a carbon steel blow-off plug upon request.

SCREENS

Standard perforated 304 stainless steel screens are spot welded along the seam for maximum strength. Different size perforations and meshes are available in stainless steel, monel, and brass to meet specific media requirements. If media is not indicated, screens for *steam* will be supplied.

SELF CLEANING

Self cleaning is accomplished by opening the valve or drain plug connected to the blow-off port. **Warning:** See Maintenance Instructions on page S6 of the Strainer Information Section for additional precautions and detailed information on servicing the strainer.

WORKING PRESSURES - NON SHOCK

NOM. RATING	MEDIA	1/4" to 3"	8 mm to 80 mm
600# (THREADED & SOCKET WELD)	STEAM	600 PSI @ 838ºF	4138 KPa @ 448ºC
	W.O.G.	1480 PSI @ 100ºF	10208 KPa @ 38ºC

KECKLEY

TECHNICAL DATA
DIMENSIONS AND WEIGHTS

Style SB-7BC

Y-Strainer, 600 lb. Threaded & Socket Weld
Bolted Cover
Carbon Steel (ASTM A 216, Grade WCB)

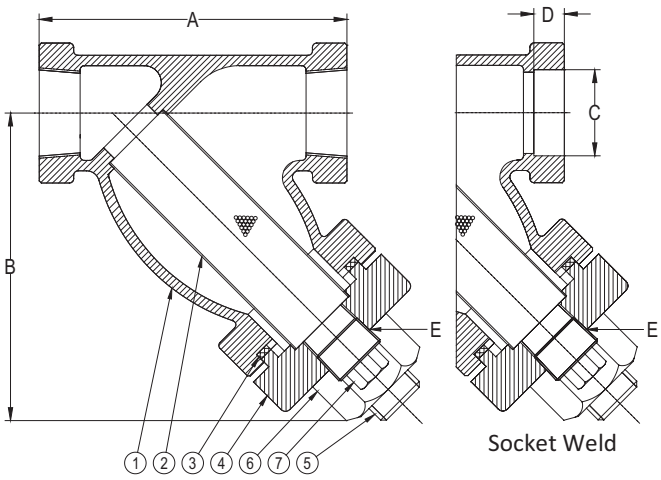

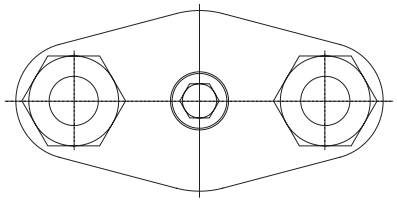

Bolted Cover View

PARTS LIST		
ITEM	DESCRIPTION	MATERIAL
1	Body	Carbon Steel (ASTM A 216, Grade WCB)
2	Screen	Stainless Steel (304)
3	Gasket	Spiral Wound Stainless Steel (304)
4	Cap	Carbon Steel (ASTM A 216, Grade WCB)
5	Stud	Carbon Steel (ASTM A 193, Grade B7)
6	Nut	Carbon Steel (ASTM A 194, Grade 2H)
7	Plug	Carbon Steel (ASTM A 105)

*Optional Body Materials Available in LCB, WC6, and WC9.

STANDARD SCREENS SUPPLIED

SIZE			SCREEN PERFORATION					
			FOR STEAM		OPEN AREA	FOR LIQ-UID		OPEN AREA
in	mm		in	mm		in	mm	

Standard screens supplied are for **steam service**, unless otherwise specified.
Options: Other perforations, meshes, and screen materials are available.

SIZE		DIMENSIONS										WEIGHTS	
		A		B		C		D		E			
in	mm	in	mm	in	mm	in	mm	in	mm	in	mm	lbs	kgs
1/4	8	3	76	2-1/2	63	0.555	14	3/8	10	1/4	8	3	1.14
3/8	10	3	76	2-1/2	63	0.690	18	3/8	10	1/4	8	3	1.14
1/2	15	3-7/8	99	3-1/4	83	0.855	22	3/8	10	1/4	8	3	1.14
3/4	20	4-1/4	108	4-1/4	108	1.065	27	1/2	13	3/8	10	3	1.32
1	22	4-15/16	125	4-5/8	117	1.330	34	1/2	13	1/2	15	6	2.33
1-1/4	32	5-5/8	143	5-1/2	140	1.675	43	1/2	13	3/4	20	10	4.30
1-1/2	40	6-1/4	159	6-1/4	159	1.915	49	1/2	13	3/4	20	12	5.43
2	50	7-1/2	191	7-1/4	184	2.406	61	5/8	16	1	25	18	7.74
2-1/2	65	12	305	9-3/8	238	2.906	74	5/8	16	1-1/4	32	49	22.00
3	80	12	305	9-3/8	238	3.535	90	5/8	16	1-1/4	32	49	22.00

Certified dimensional drawings are available upon request.
†This table reflects only the nearest metric equivalents.

FLOW COEFFICIENTS

Size	C_V	Size	C_V	Size	C_V
1/4"	9.5	1"	30	2-1/2"	129.7
3/8"	9.5	1-1/4"	44.9	3"	161.3
1/2"	9.5	1-1/2"	61		
3/4"	18.7	2"	98		

TOTAL SCREEN AREA

Size	(in^2)	Size	(in^2)	Size	(in^2)
1/4"	4.36	1"	13.84	2-1/2"	69.82
3/8"	4.36	1-1/4"	20.83	3"	69.82
1/2"	4.36	1-1/2"	24.02		
3/4"	9.37	2"	35.48		

*See DETERMINING RATIOS on page S5 of the Strainer Information Section for calculating NET FREE AREA of the screen to inside pipe area.

PRESSURE vs. TEMPERATURE CHART

600# Threaded & Socket Weld Carbon Steel (ASTM A 216, Grade WCB)

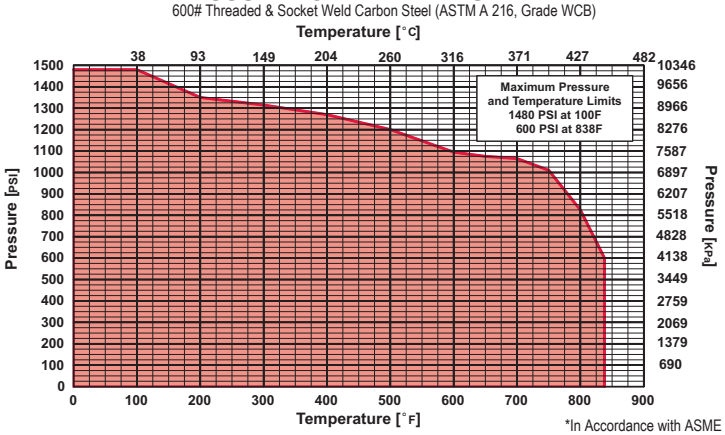

*In Accordance with ASME B16.34

KECKLEY

Style SB

Y-Strainer
Carbon Steel (ASTM A 216, Grade WCB)
1500 lb. Threaded
1500 lb. Socket Weld

Cast Carbon Steel Y-Strainer

APPLICATIONS

Steam, water, oil or gas where protection from foreign matter in a pipeline is required.

CONSTRUCTION

The Keckley Style SB stainers are constructed from rugged carbon steel castings that are machined to exacting specifications.

Socket Weld bore is in compliance with ASME B16.11 unless otherwise specified.

FEATURES

The Keckley Style SB strainer features a machined groove in the body and cap for proper alignment and to ensure accurate reseating when servicing is required. The gasket is 304 stainless steel spiral wound and is compressed between the body and cover (for maximum strength and durability) and designed for both high pressure and high temperature service. The cover is not supplied with a blow-off hole.

SCREENS

Standard perforated 304 stainless steel screens are spot welded along the seam for maximum strength. Different size perforations and meshes are available in stainless steel, monel, and brass to meet specific media requirements. If media is not indicated, screens for *steam* will be supplied.

SELF CLEANING

Warning: See Maintenance Instructions on page S6 of the Strainer Information Section for additional precautions and detailed information on servicing the strainer.

WORKING PRESSURES - NON SHOCK

NOM. RATING	MEDIA	1/2" to 3"	15 mm to 80 mm
1500# (THREADED & SOCKET WELD)	STEAM	1500 PSI @ 838ºF	10346 KPa @ 448ºC
	W.O.G.	3705 PSI @ 100ºF	25553 KPa @ 38ºC

KECKLEY

TECHNICAL DATA
DIMENSIONS AND WEIGHTS

Style SB

Y-Strainer, 1500 lb. Threaded & Socket Weld Carbon Steel (ASTM A 216, Grade WCB)

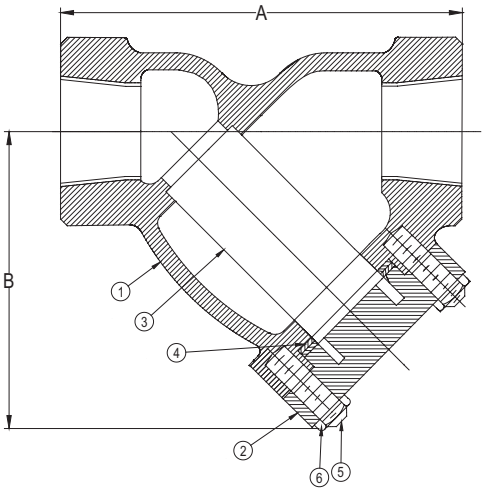

Threaded

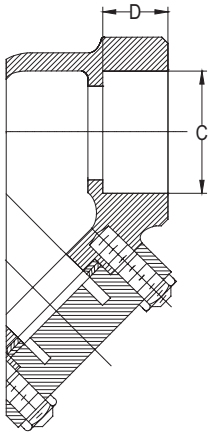

Socket Weld

PARTS LIST		
ITEM	DESCRIPTION	MATERIAL
1*	Body	Carbon Steel (ASTM A 216, Grade WCB)
2	Cover	Carbon Steel (ASTM A 216, Grade WCB)
3	Screen	Stainless Steel (304)
4	Gasket	Spiral Wound Stainless Steel (304)
5	Studs	Carbon Steel (ASTM A 193, Grade B16)
6	Nuts	Carbon Steel (ASTM A 194, Grade 4)

*Optional Body Materials Available in LCB, WC6, and WC9.

STANDARD SCREENS SUPPLIED

SIZE			SCREEN PERFORATION					
			FOR STEAM		OPEN AREA	FOR LIQ-UID		OPEN AREA
in	mm		in	mm		in	mm	

Standard screens supplied are for **steam service**, unless otherwise specified.
Options: Other perforations, meshes, and screen materials are available.

SIZE		DIMENSIONS								WEIGHTS	
		A		B		C		D			
in	mm	in	mm	in	mm	in	mm	in	mm	lbs	kgs
1/2	15	3-15/16	100	3	76	0.855	22	3/8	10	10	5
3/4	20	4-1/4	108	3-3/4	95	1.065	27	1/2	13	12	5
1	25	5	127	5	127	1.330	34	1/2	13	15	7
1-1/4	32	8-3/8	213	5-1/2	140	1.675	43	1/2	13	22	10
1-1/2	40	8-3/8	213	5-1/2	140	1.915	49	1/2	13	22	10
2	50	9-5/16	237	7-3/8	187	2.406	61	5/8	16	30	14
2-1/2	65	12	305	10-1/2	267	2.906	74	5/8	16	50	23
3	80	12	305	10-1/2	267	3.535	90	5/8	16	50	23

Certified dimensional drawings are available upon request.
†This table reflects only the nearest metric equivalents.

FLOW COEFFICIENTS

Size	C_V	Size	C_V	Size	C_V
1/2"	9	1-1/4"	45	2-1/2"	129
3/4"	18	1-1/2"	60	3"	170
1"	30	2"	98		

TOTAL SCREEN AREA

Size	(in²)	Size	(in²)	Size	(in²)
1/2"	5.97	1-1/4"	27.94	2-1/2"	77.80
3/4"	9.73	1-1/2"	27.94	3"	79.48
1"	17.55	2"	38.08		

*See DETERMINING RATIOS on page S5 of the Strainer Information Section for calculating NET FREE AREA of the screen to inside pipe area.

PRESSURE vs. TEMPERATURE CHART

1500# Threaded & Socket Weld Carbon Steel (ASTM A 216, Grade WCB)

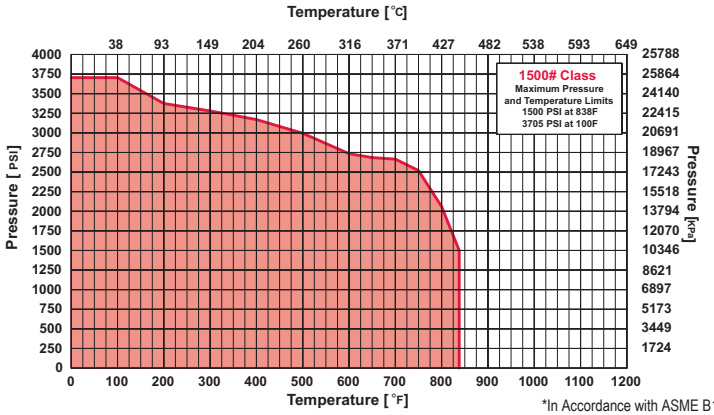

*In Accordance with ASME B16.34

KECKLEY

Style SA-7

Y-Strainer
Carbon Steel (ASTM A 216, Grade WCB)
150 lb. & 300 lb. Flanged

Cast Carbon Steel Y-Strainer

APPLICATIONS

Steam, water, oil or gas where protection from foreign matter in a pipeline is required.

CONSTRUCTION

The Keckley Style SA-7 stainers are constructed from rugged carbon steel castings and are machined to exacting specifications. These bodies have drilled flanges that are in accordance with ASME B16.5. All flanges come standard with back-faced bolt holes.

FEATURES

The Keckley Style SA-7 strainer features a machined groove in both the body and cover for proper screen alignment and to ensure accurate reseating when servicing is required. The gasket is 304 stainless steel spiral wound and is compressed between the body and cover (for maximum strength and durability) and designed for high pressure and high temperature service. All Keckley Style SA-7 strainers have cap screws and can be furnished with a steel blow-off plug upon request.

Blind covers are available upon request.

SCREENS

Standard perforated 304 stainless steel screens are spot welded along the seam for maximum strength. Different size perforations and meshes are available in stainless steel, monel, and brass to meet specific media requirements. If media is not indicated, screens for *steam* will be supplied.

SELF CLEANING

Self cleaning is accomplished by opening the valve or drain plug connected to the blow-off port. **Warning:** See Maintenance Instructions on page S6 of the Strainer Information Section for additional precautions and detailed information on servicing the strainer.

WORKING PRESSURES - NON SHOCK

NOM. RATING	MEDIA	1/2" to 14"	15 mm to 350 mm
150# R.F. & D. (STANDARD FLANGE)	STEAM	150 PSI @ 565ºF	1035 KPa @ 296ºC
	W.O.G.	285 PSI @ 100ºF	1966 KPa @ 38ºC
NOM. RATING	**MEDIA**	**1/2" to 14"**	**15 mm to 350 mm**
300# R.F. & D. (EX. HEAVY FLANGE)	STEAM	300 PSI @ 838ºF	2069 KPa @ 448ºC
	W.O.G.	740 PSI @ 100ºF	5104 KPa @ 38ºC

KECKLEY

TECHNICAL DATA
DIMENSIONS AND WEIGHTS

Style SA-7

Y-Strainer, 150 lb. & 300 lb. Flanged
Carbon Steel (ASTM A 216, Grade WCB)

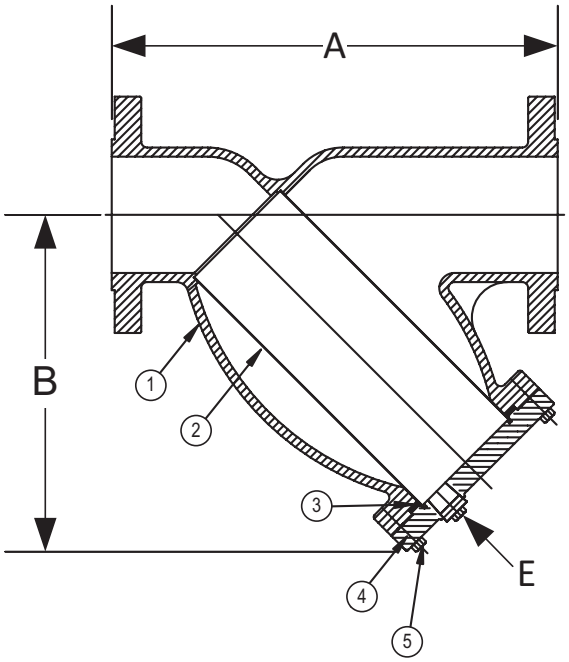

PARTS LIST		
ITEM	DESCRIPTION	MATERIAL
1*	Body	Carbon Steel (ASTM A 216, Grade WCB)
2	Screen	Stainless Steel (304)
3	Gasket	Spiral Wound Stainless Steel (304)
4	Cover	Carbon Steel (ASTM A 216, Grade WCB)
5	Hex Head Cap Screw	Carbon Steel (ASTM A 193, Grade B7)

Optional: Blow-off Plug, Carbon Steel.
*Optional Body Materials Available in LCB, WC6, and WC9.

STANDARD SCREENS SUPPLIED

SIZE			SCREEN PERFORATION					
			FOR STEAM		OPEN AREA	FOR LIQ-UID		OPEN AREA
in	mm		in	mm		in	mm	
1/2 to 4	15 to 100	28	3/64	1.2	33%	1/16	1.6	30%
5 to 10	125 to 250	22	3/64	1.2	33%	1/8	3.2	43%

Standard screens supplied are for **steam service**, unless otherwise specified.
Options: Other perforations, meshes, and screen materials are available.

SIZE		DIMENSIONS										WEIGHTS			
		A				B				E					
		150#		300#		150#		300#		150# & 300#		150#		300#	
in	mm	in	mm	in	mm	in	mm	in	mm	in	mm	lbs	kgs	lbs	kgs
1/2	15	6-1/2	165	6-1/8	156	3-3/4	95	3-3/4	95	3/8	10	7	3.02	8	3.45
3/4	20	7-3/8	187	7-3/4	197	4-1/4	108	4-1/4	108	1/2	15	10	4.46	13	5.68
1	25	7-3/8	187	7-7/8	200	4-1/4	108	4-1/4	108	1/2	15	10	4.28	13	5.59
1-1/4	32	7	178	8-1/8	206	5-1/8	130	5-1/8	130	1/2	15	13	5.86	21	9.28
1-1/2	40	7-1/8	181	8-1/4	210	5-1/8	130	5-1/8	130	1/2	15	14	6.20	21	9.37
2	50	7-7/8	200	9-1/2	241	6	152	6	152	1/2	15	23	10.15	27	11.83
2-1/2	65	9-3/4	248	10-3/8	264	7	178	7	178	1	25	36	16.16	41	18.53
3	80	10-1/16	256	12	305	7-7/16	189	7-5/16	186	1	25	40	17.76	56	25.06
4	100	12-1/8	308	14-1/2	368	8-15/16	227	8-15/16	227	1-1/2	40	61	27.26	95	42.83
5	125	15-1/2	394	19-5/16	491	13-1/32	331	13-1/32	331	2	50	101	45.58	189	85.72
6	150	18-1/2	470	19-5/16	491	13-1/4	337	13-1/4	337	2	50	134	60.72	189	85.57
8	200	21-3/8	543	23-3/8	594	15-1/2	394	15-1/2	394	2	50	224	101.30	320	144.91
10	250	26	660	27-3/8	695	18-7/16	468	18-7/16	468	2	50	326	147.49	481	218.01
12	300	29-7/8	759	32	813	21-5/8	549	21-5/8	549	2	50	622	282.08	839	380.12
14	350	34-1/2	876	36	914	25	635	25	635	2	50	791	358.62	1017	460.96

Certified dimensional drawings are available upon request.
†This table reflects only the nearest metric equivalents.

TOTAL SCREEN AREA

Size	(in²)	Size	(in²)	Size	(in²)	Size	(in²)
1/2"	6.46	1-1/2"	18.68	4"	91.89	10"	532.80
3/4"	12.32	2"	30.28	5"	209.41	12"	600.71
1"	12.32	2-1/2"	46.91	6"	241.18	*(Total screen area listed for 150 lb. class only)*	
1-1/4"	18.68	3"	57.62	8"	342.86		

*See DETERMINING RATIOS on page S5 of the Strainer Information Section for calculating NET FREE AREA of the screen to inside pipe area.

PRESSURE vs. TEMPERATURE CHART

150# & 300# Flanged Carbon Steel (ASTM A 216 , Grade WCB)

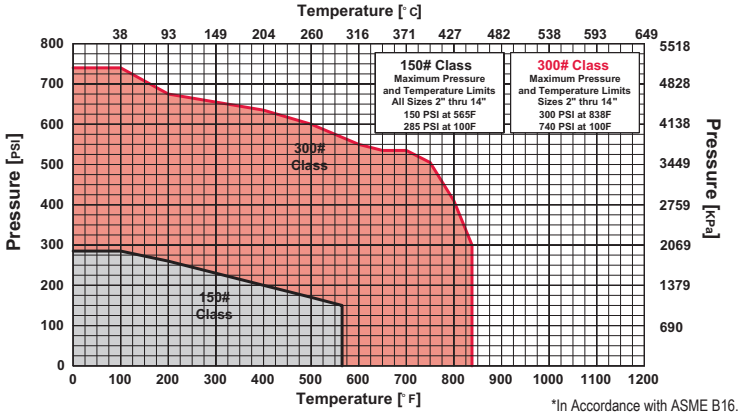

*In Accordance with ASME B16.5

KECKLEY

Style SA

Y-Strainer
Carbon Steel (ASTM A 216, Grade WCB)
600 lb. Flanged

Cast Carbon Steel Y-Strainer

APPLICATIONS

Steam, water, oil or gas where protection from foreign matter in a pipeline is required.

CONSTRUCTION

The Keckley Style SA stainers are constructed from rugged carbon steel castings and are machined to exacting specifications. These bodies have drilled flanges that are in accordance with ASME B16.5. All flanges come standard with back-faced bolt holes.

FEATURES

The Keckley Style SA strainer features a machined groove in both the body and cover for proper screen alignment and to ensure accurate reseating when servicing is required. The gasket is 304 stainless steel spiral wound and is compressed between the body and cover (for maximum strength and durability) and designed for high pressure and high temperature service. All Keckley Style SA strainers have cap screws and can be furnished with a steel blow-off plug upon request.

Blind covers are available upon request.

SCREENS

Standard perforated 304 stainless steel screens are spot welded along the seam for maximum strength. Different size perforations and meshes are available in stainless steel, monel, and brass to meet specific media requirements. If media is not indicated, screens for *steam* will be supplied.

SELF CLEANING

Self cleaning is accomplished by opening the valve or drain plug connected to the blow-off port. **Warning:** See Maintenance Instructions on page S6 of the Strainer Information Section for additional precautions and detailed information on servicing the strainer.

WORKING PRESSURES - NON SHOCK

NOM. RATING	MEDIA	1/2" to 12"	15 mm to 300 mm
600# R.F. & D. (FLANGE)	STEAM	600 PSI @ 838ºF	4138 KPa @ 448ºC
	W.O.G.	1480 PSI @ 100ºF	10208 KPa @ 38ºC

KECKLEY

TECHNICAL DATA
DIMENSIONS AND WEIGHTS

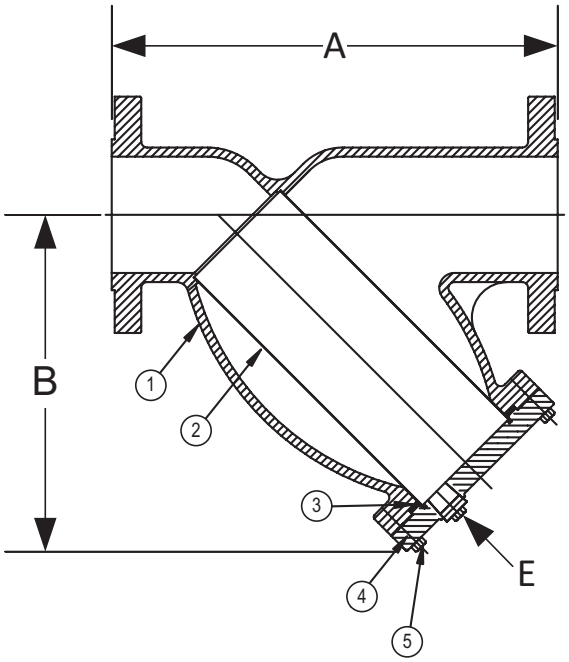

Style SA

Y-Strainer, 600 lb. Flanged
Carbon Steel (ASTM A 216, Grade WCB)

PARTS LIST		
ITEM	DESCRIPTION	MATERIAL
1	Body	Carbon Steel (ASTM A 216, Grade WCB)
2	Screen	Stainless Steel (304)
3	Gasket	Spiral Wound Stainless Steel (304)
4	Cover	Carbon Steel (ASTM A 216, Grade WCB)
5	Hex Head Cap Screw	Carbon Steel (ASTM A 193, Grade B7)

Optional: Blow-off Plug, Carbon Steel (ASTM A 105).
*Optional Body Materials Available in LCB, WC6, and WC9.

STANDARD SCREENS SUPPLIED

SIZE			SCREEN PERFORATION					
			FOR STEAM		OPEN AREA	FOR LIQ-UID		OPEN AREA
in	mm		in	mm		in	mm	
2 to 4	50 to 100	28	3/64	1.2	33%	1/16	1.6	30%
5 to 10	125 to 250	22	3/64	1.2	33%	1/8	3.2	43%

Standard screens supplied are for **steam service**, unless otherwise specified.
Options: Other perforations, meshes, and screen materials are available.

SIZE		DIMENSIONS						WEIGHTS	
		A		B		E			
in	mm	in	mm	in	mm	in	mm	lbs	kgs
1/2	15	6-5/8	168	3-1/2	89	3/8	10	15	6.80
3/4	20	8-3/8	213	3-3/4	95	1/2	15	20	9.07
1	25	8-3/8	213	3-3/4	95	1/2	15	20	9.07
1-1/4	32	10-1/8	257	5-1/2	140	1/2	15	27	12.25
1-1/2	40	10-1/4	360	5-1/2	140	1/2	15	27	12.25
2	50	11	279	7	178	1/2	15	31	13.83
2-1/2	65	12	305	8-1/4	210	1	25	49	21.92
3	80	13-1/2	343	9-1/4	235	1	25	63	28.17
4	100	18	457	12-1/2	318	1-1/2	40	127	57.53
6	150	25-5/8	651	20	508	2	50	339	153.51
8	200	31-3/4	806	24	610	2	50	748	338.84
10	250	37-3/4	959	28-1/2	724	2	50	1213	550.00
12	300	45-1/2	1156	34-1/2	876	2	50	1511	685.00

Larger sizes available upon request.
†This table reflects only the nearest metric equivalents.

TOTAL SCREEN AREA

Size	(in²)	Size	(in²)	Size	(in²)	Size	(in²)
1/2"	--	1-1/2"	--	4"	151.49	12"	1313.88
3/4"	--	2"	44.17	6"	416.73		
1"	--	2-1/2"	64.14	8"	630.23		
1-1/4"	--	3"	77.63	10"	894.52		

*See DETERMINING RATIOS on page S5 of the Strainer Information Section for calculating NET FREE AREA of the screen to inside pipe area.

PRESSURE vs. TEMPERATURE CHART

600# Flanged Carbon Steel (ASTM A 216, Grade WCB)

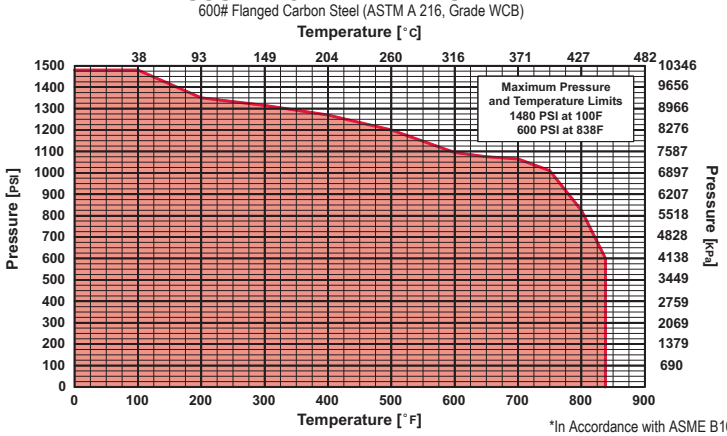

*In Accordance with ASME B16.5

KECKLEY

Style SA-7

Y-Strainer
Carbon Steel (ASTM A 216, Grade WCB)
150 lb. & 300 lb. Butt Weld

Cast Carbon Steel Y-Strainer

APPLICATIONS

Steam, water, oil or gas where protection from foreign matter in a pipeline is required.

CONSTRUCTION

The Keckley Style SA-7 stainers are constructed from rugged carbon steel castings and are machined to exacting specifications.

Style SA-7 butt weld connections will be machined to match schedule 40 pipe.

FEATURES

The Keckley Style SA-7 strainer features a machined groove in both the body and cover for proper screen alignment and to ensure accurate reseating when servicing is required. The gasket is 304 stainless steel spiral wound and is compressed between the body and cover (for maximum strength and durability) and designed for high pressure and high temperature service. All Keckley Style SA-7 strainers have cap screws and can be furnished with a steel blow-off plug upon request.

Blind covers are available upon request.

SCREENS

Standard perforated 304 stainless steel screens are spot welded along the seam for maximum strength. Different size perforations and meshes are available in stainless steel, monel, and brass to meet specific media requirements. If media is not indicated, screens for *steam* will be supplied.

SELF CLEANING

Self cleaning is accomplished by opening the valve or drain plug connected to the blow-off port. **Warning:** See Maintenance Instructions on page S6 of the Strainer Information Section for additional precautions and detailed information on servicing the strainer.

WORKING PRESSURES - NON SHOCK

NOM. RATING	MEDIA	1/2" to 12"	15 mm to 300 mm
150# (BUTT WELD)	STEAM	150 PSI @ 565ºF	1035 KPa @ 296ºC
	W.O.G.	285 PSI @ 100ºF	1966 KPa @ 38ºC
NOM. RATING	**MEDIA**	**1/2" to 12"**	**15 mm to 300 mm**
300# (BUTT WELD)	STEAM	300 PSI @ 838ºF	2069 KPa @ 448ºC
	W.O.G.	740 PSI @ 100ºF	5104 KPa @ 38ºC

KECKLEY

TECHNICAL DATA
DIMENSIONS AND WEIGHTS

Style SA-7

Y-Strainer, 150 lb. & 300 lb. Butt Weld
Carbon Steel (ASTM A 216, Grade WCB)

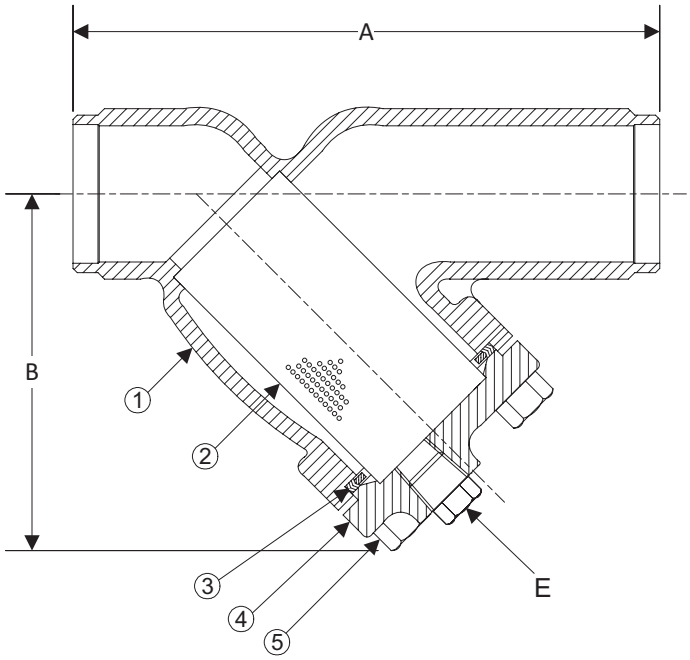

PARTS LIST		
ITEM	DESCRIPTION	MATERIAL
1*	Body	Carbon Steel (ASTM A 216, Grade WCB)
2	Screen	Stainless Steel (304)
3	Gasket	Spiral Wound Stainless Steel (304)
4	Cover	Carbon Steel (ASTM A 216, Grade WCB)
5	Hex Head Cap Screw	Carbon Steel (ASTM A 193, Grade B7)

Optional: Blow-off Plug, Carbon Steel.
*Optional Body Materials Available in LCB, WC6, and WC9.

STANDARD SCREENS SUPPLIED

SIZE			SCREEN PERFORATION					
			FOR STEAM		OPEN AREA	FOR LIQ-UID		OPEN AREA
in	mm		in	mm		in	mm	
1/2 to 4	15 to 100	28	3/64	1.2	33%	1/16	1.6	30%
5 to 10	125 to 250	22	3/64	1.2	33%	1/8	3.2	43%

Standard screens supplied are for **steam service**, unless otherwise specified.
Options: Other perforations, meshes, and screen materials are available.

SIZE		DIMENSIONS										WEIGHTS			
		A				B				E					
		150#		300#		150#		300#		150# & 300#		150#		300#	
in	mm	in	mm	in	mm	in	mm	in	mm	in	mm	lbs	kgs	lbs	kgs
1/2	15	6-1/2	165	6-1/8	156	3-3/4	95	3-3/4	95	3/8	10	6	2.72	6	2.72
3/4	20	7-3/8	187	7-3/4	197	4-1/4	108	4-1/4	108	1/2	15	8	3.63	10	4.53
1	25	7-3/8	187	7-7/8	200	4-1/4	108	4-1/4	108	1/2	15	8	3.63	10	4.53
1-1/4	32	7	178	8-1/8	206	5-1/8	130	5-1/8	130	1/2	15	10	4.53	15	6.80
1-1/2	40	7-1/8	181	8-1/4	210	5-1/8	130	5-1/8	130	1/2	15	11	4.99	15	6.80
2	50	7-7/8	200	9-1/2	241	6	152	6	152	1/2	15	14	5.93	16	6.92
2-1/2	65	9-3/4	248	10-3/8	264	7	178	7	178	1	25	19	8.56	23	10.06
3	80	10-1/16	256	12	305	7-7/16	189	7-5/16	186	1	25	21	9.46	50	22.65
4	100	12-1/8	308	14-1/2	368	8-15/16	227	8-15/16	227	1-1/2	40	37	16.77	57	25.80
5	125	15-1/2	394	19-5/16	491	13-1/32	331	13-1/32	331	2	50	84	37.85	145	65.36
6	150	18-1/2	470	19-5/16	491	13-1/4	337	13-1/4	337	2	50	104	46.87	145	65.36
8	200	21-3/8	543	23-3/8	594	15-1/2	394	15-1/2	394	2	50	149	67.51	247	111.80
10	250	26	660	27-3/8	695	18-7/16	468	18-7/16	468	2	50	261	118.25	346	156.52
12	300	29-7/8	759	32	813	21-5/8	549	21-5/8	549	2	50	452	204.68	575	260.58

Certified dimensional drawings are available upon request.
†This table reflects only the nearest metric equivalents.

TOTAL SCREEN AREA

Size	(in²)	Size	(in²)	Size	(in²)	Size	(in²)
1/2"	6.46	1-1/2"	18.68	4"	91.89	10"	532.80
3/4"	12.32	2"	30.28	5"	209.41	12"	600.71
1"	12.32	2-1/2"	46.91	6"	241.18	*(Total screen area listed for 150 lb. class only)*	
1-1/4"	18.68	3"	57.62	8"	342.86		

*See DETERMINING RATIOS on page S5 of the Strainer Information Section for calculating NET FREE AREA of the screen to inside pipe area.

PRESSURE vs. TEMPERATURE CHART

150# & 300# Flanged Carbon Steel (ASTM A 216, Grade WCB)

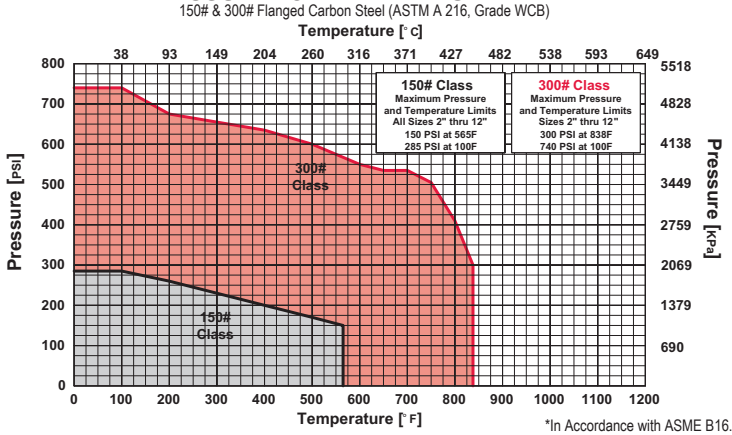

*In Accordance with ASME B16.34

KECKLEY

Style SA

Y-Strainer
Carbon Steel (ASTM A 216, Grade WCB)
600 lb. Butt Weld

Cast Carbon Steel Y-Strainer

APPLICATIONS

Steam, water, oil or gas where protection from foreign matter in a pipeline is required.

CONSTRUCTION

The Keckley Style SA stainers are constructed from rugged carbon steel castings and are machined to exacting specifications.

Style SA 600 lb. butt weld connections will be machined to match schedule 80 pipe unless otherwise specified.

FEATURES

The Keckley Style SA strainer features a machined groove in both the body and cover for proper screen alignment and to ensure accurate reseating when servicing is required. The gasket is 304 stainless steel spiral wound and is compressed between the body and cover (for maximum strength and durability) and designed for high pressure and high temperature service. All Keckley Style SA strainers have cap screws and can be furnished with a steel blow-off plug upon request.

Blind covers are available upon request.

SCREENS

Standard perforated 304 stainless steel screens are spot welded along the seam for maximum strength. Different size perforations and meshes are available in stainless steel, monel, and brass to meet specific media requirements. If media is not indicated, screens for *steam* will be supplied.

SELF CLEANING

Self cleaning is accomplished by opening the valve or drain plug connected to the blow-off port. **Warning:** See Maintenance Instructions on page S6 of the Strainer Information Section for additional precautions and detailed information on servicing the strainer.

WORKING PRESSURES - NON SHOCK

NOM. RATING	MEDIA	1/2" to 12"	15 mm to 300 mm
600# (BUTT WELD)	STEAM	600 PSI @ 838ºF	4138 KPa @ 448ºC
	W.O.G.	1480 PSI @ 100ºF	10208 KPa @ 38ºC

KECKLEY

TECHNICAL DATA
DIMENSIONS AND WEIGHTS

Style SA

Y-Strainer, 600 lb. Butt Weld
Carbon Steel (ASTM A 216, Grade WCB)

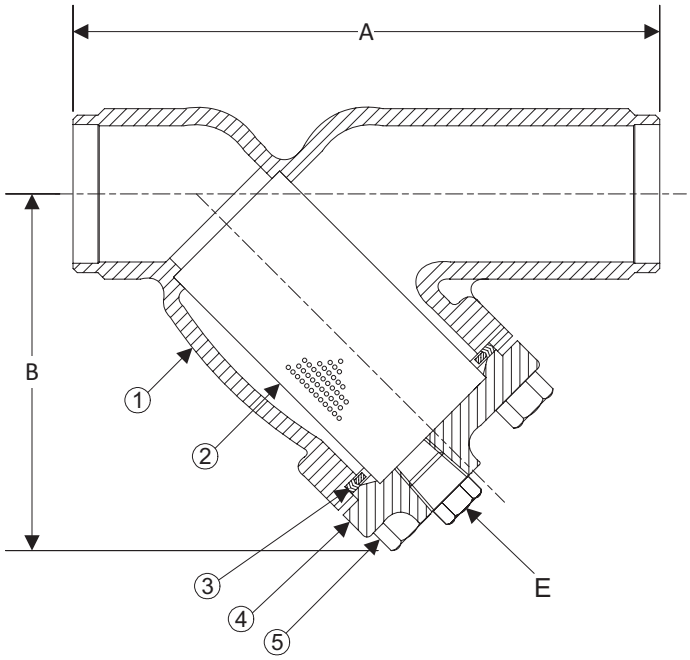

PARTS LIST		
ITEM	DESCRIPTION	MATERIAL
1	Body	Carbon Steel (ASTM A 216, Grade WCB)
2	Screen	Stainless Steel (304)
3	Gasket	Spiral Wound Stainless Steel (304)
4	Cover	Carbon Steel (ASTM A 216, Grade WCB)
5	Hex Head Cap Screw	Carbon Steel (ASTM A 193, Grade B7)

Optional: Blow-off Plug, Carbon Steel (ASTM A 105).
*Optional Body Materials Available in LCB, WC6, and WC9.

STANDARD SCREENS SUPPLIED

SIZE			SCREEN PERFORATION					
			FOR STEAM		OPEN AREA	FOR LIQ-UID		OPEN AREA
in	mm		in	mm		in	mm	
2 to 4	50 to 100	28	3/64	1.2	33%	1/16	1.6	30%
5 to 10	125 to 250	22	3/64	1.2	33%	1/8	3.2	43%

Standard screens supplied are for **steam service**, unless otherwise specified.
Options: Other perforations, meshes, and screen materials are available.

SIZE		DIMENSIONS						WEIGHTS	
		A		B		E			
in	mm	in	mm	in	mm	in	mm	lbs	kgs
1/2	15	6-5/8	168	3-1/2	89	3/8	10	9	4.08
3/4	20	8-3/8	213	3-3/4	95	1/2	15	11	4.99
1	25	8-3/8	213	3-3/4	95	1/2	15	11	4.99
1-1/4	32	10-1/8	257	5-1/2	140	1/2	15	13	5.89
1-1/2	40	10-1/4	360	5-1/2	140	1/2	15	13	5.89
2	50	11	279	7	178	1/2	15	15	6.80
2-1/2	65	12	305	8-1/4	210	1	25	30	13.60
3	80	13-1/2	343	9-1/4	235	1	25	33	14.97
4	100	18	457	12-1/2	318	1-1/2	40	77	34.93
6	150	25-5/8	651	20	508	2	50	217	98.43
8	200	31-3/4	806	24	610	2	50	386	175.09
10	250	37-3/4	959	28-1/2	724	2	50	668	303.00
12	300	45-1/2	1156	34-1/2	876	2	50	831	376.94

Larger sizes available upon request.
†This table reflects only the nearest metric equivalents.

TOTAL SCREEN AREA

Size	(in²)	Size	(in²)	Size	(in²)	Size	(in²)
1/2"	--	1-1/2"	--	4"	151.49	12"	1313.88
3/4"	--	2"	44.17	6"	416.73		
1"	--	2-1/2"	64.14	8"	630.23		
1-1/4"	--	3"	77.63	10"	894.52		

*See DETERMINING RATIOS on page S5 of the Strainer Information Section for calculating NET FREE AREA of the screen to inside pipe area.

PRESSURE vs. TEMPERATURE CHART

600# Butt Weld Carbon Steel (ASTM A 216, Grade WCB)

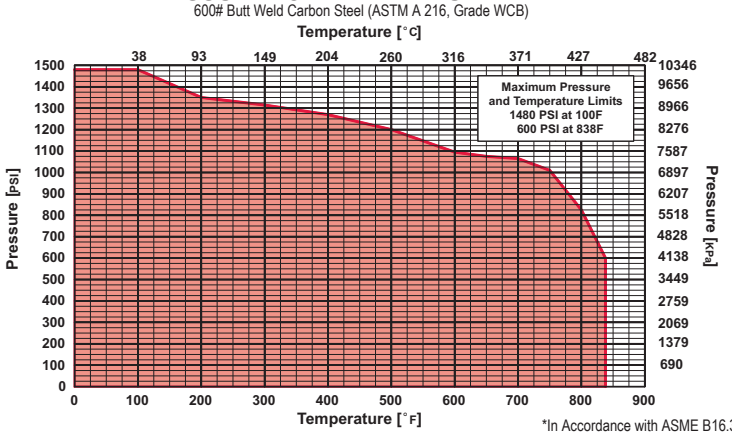

*In Accordance with ASME B16.34

KECKLEY

Style SSB-7

Y-Strainer
Stainless Steel (ASTM A 351, Grade CF8M)
600 lb. Threaded
600 lb. Socket Weld

Cast 316 Stainless Steel Y-Strainer

APPLICATIONS

Steam, water, oil or gas where protection from foreign matter in a pipeline is required.

CONSTRUCTION

The Keckley Style SSB-7 stainers are constructed from rugged 316 stainless steel castings that are machined to exacting specifications.

Socket Weld bore is in compliance with ASME B16.11 unless otherwise specified.

FEATURES

The Keckley Style SSB-7 strainer features a machined groove in the body and cap for proper alignment and to ensure accurate reseating when servicing is required. This strainer has a straight threaded cap and is furnished standard with a NPT blow-off connection. The gasket is 304 stainless steel spiral wound and is compressed between the body and cap (for maximum strength and durability) and designed for both high pressure and high temperature service. Keckley Style SSB-7 strainers can be supplied with a stainless steel blow-off plug upon request.

SCREENS

Standard perforated 304 stainless steel screens are spot welded along the seam for maximum strength. Different size perforations and meshes are available in stainless steel, monel, and brass to meet specific media requirements. If media is not indicated, screens for *steam* will be supplied.

SELF CLEANING

Self cleaning is accomplished by opening the valve or drain plug connected to the blow-off port. **Warning:** See Maintenance Instructions on page S6 of the Strainer Information Section for additional precautions and detailed information on servicing the strainer.

WORKING PRESSURES - NON SHOCK

NOM. RATING	MEDIA	1/4" to 3"	8 mm to 80 mm
600# (THREADED & SOCKET WELD)	STEAM	600 PSI @ 1125ºF	4138 KPa @ 607ºC
	W.O.G.	1440 PSI @ 100ºF	9932 KPa @ 38ºC

KECKLEY

TECHNICAL DATA
DIMENSIONS AND WEIGHTS

Style SSB-7

Y-Strainer, 600 lb. Threaded & Socket Weld Stainless Steel (ASTM A 351, Grade CF8M)

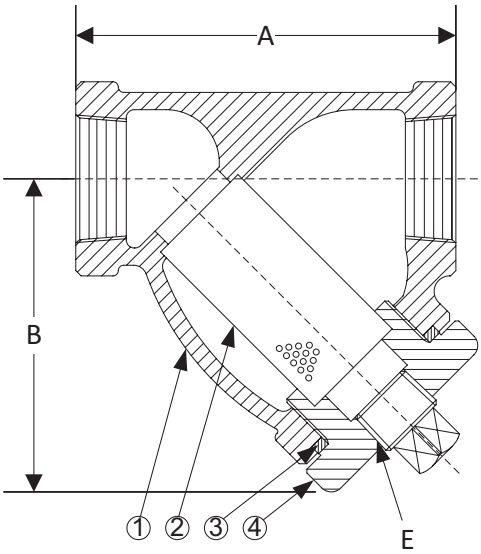

Threaded

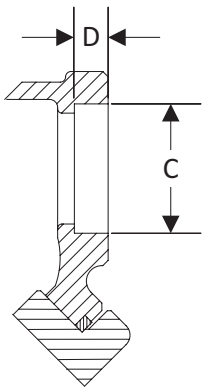

Socket Weld

PARTS LIST		
ITEM	DESCRIPTION	MATERIAL
1	Body	Stainless Steel (ASTM A 351, Grade CF8M)
2	Screen	Stainless Steel (304)
3	Gasket	Spiral Wound Stainless Steel (304)
4	Cap	Stainless Steel (ASTM A 351, Grade CF8M)

Optional: Blow-off Plug, Carbon Steel (ASTM A 105).
*Optional Body Materials Available in 304 and 400 Series SS, Alloy 20, Hastelloy, Inconel, Monel and Stellite..

STANDARD SCREENS SUPPLIED

SIZE			SCREEN PERFORATION					
			FOR STEAM		OPEN AREA	FOR LIQ-UID		OPEN AREA
in	mm		in	mm		in	mm	

Standard screens supplied are for **steam service**, unless otherwise specified.
Options: Other perforations, meshes, and screen materials are available.

SIZE		DIMENSIONS										WEIGHTS	
		A		B		C		D		E			
in	mm	in	mm	in	mm	in	mm	in	mm	in	mm	lbs	kgs
1/4	8	2-15/16	75	2-7/16	62	0.555	14	3/8	10	1/4	8	2	0.76
3/8	10	2-15/16	75	2-7/16	62	0.690	18	3/8	10	1/4	8	2	0.76
1/2	15	2-15/16	75	2-7/16	62	0.855	22	3/8	10	1/4	8	2	0.76
3/4	20	3-11/16	94	3	76	1.065	27	1/2	13	3/8	10	3	1.21
1	22	4-9/16	116	4-5/16	110	1.330	34	1/2	13	3/8	10	6	2.33
1-1/4	32	4-15/16	125	4-3/16	106	1.675	43	1/2	13	3/4	20	7	3.02
1-1/2	40	5-9/16	141	4-11/16	119	1.915	49	1/2	13	3/4	20	9	3.98
2	50	6-15/16	176	6-1/4	159	2.406	61	5/8	16	1	25	15	6.80
2-1/2	65	12	305	9-3/8	238	2.906	74	5/8	16	1-1/4	32	34	15.03
3	80	12	305	9-3/8	238	3.535	90	5/8	16	1-1/4	32	36	15.97

Certified dimensional drawings are available upon request.
†This table reflects only the nearest metric equivalents.

FLOW COEFFICIENTS

Size	C_V	Size	C_V	Size	C_V
1/4"	9.5	1"	30	2-1/2"	129.7
3/8"	9.5	1-1/4"	44.9	3"	161.3
1/2"	9.5	1-1/2"	61		
3/4"	18.7	2"	98		

TOTAL SCREEN AREA

Size	(in^2)	Size	(in^2)	Size	(in^2)
1/4"	2.75	1"	10.08	2-1/2"	78.14
3/8"	2.75	1-1/4"	12.79	3"	78.14
1/2"	2.75	1-1/2"	16.33		
3/4"	4.71	2"	27.04		

*See DETERMINING RATIOS on page S5 of the Strainer Information Section for calculating NET FREE AREA of the screen to inside pipe area.

PRESSURE vs. TEMPERATURE CHART

600# Threaded & Socket Weld Stainless Steel (ASTM A 351, Grade CF8M)

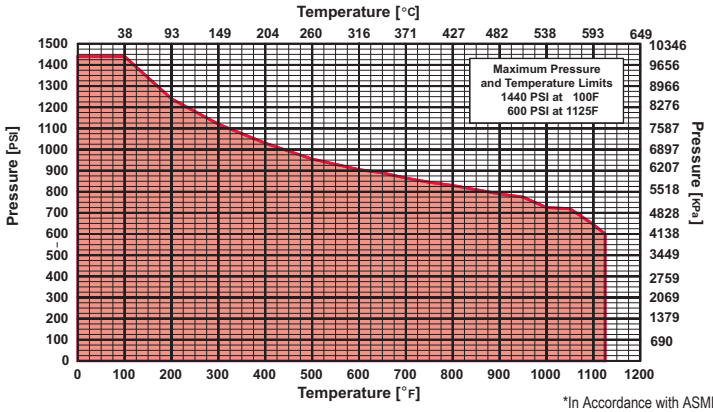

*In Accordance with ASME B16.34

KECKLEY

Style SSB-7BC

Cast 316 Stainless Steel Y-Strainer

Y-Strainer
Stainless Steel (ASTM A 351, Grade CF8M)
600 lb. Threaded Bolted Cover
600 lb. Socket Weld Bolted Cover

APPLICATIONS

Steam, water, oil or gas where protection from foreign matter in a pipeline is required.

CONSTRUCTION

The Keckley Style SSB-7BC stainers are constructed from rugged 316 stainless steel castings that are machined to exacting specifications.

Socket Weld bore is in compliance with ASME B16.11 unless otherwise specified.

FEATURES

The Keckley Style SSB-7BC strainer features a machined groove in the body and cap for proper alignment and to ensure accurate reseating when servicing is required. This strainer has a straight threaded cap and is furnished standard with a NPT blow-off connection. The gasket is 304 stainless steel spiral wound and is compressed between the body and cap (for maximum strength and durability) and designed for both high pressure and high temperature service. Keckley Style SSB-7BC strainers can be supplied with a stainless steel blow-off plug upon request.

SCREENS

Standard perforated 304 stainless steel screens are spot welded along the seam for maximum strength. Different size perforations and meshes are available in stainless steel, monel, and brass to meet specific media requirements. If media is not indicated, screens for *steam* will be supplied.

SELF CLEANING

Self cleaning is accomplished by opening the valve or drain plug connected to the blow-off port. **Warning:** See Maintenance Instructions on page S6 of the Strainer Information Section for additional precautions and detailed information on servicing the strainer.

WORKING PRESSURES - NON SHOCK

NOM. RATING	MEDIA	1/4" to 3"	8 mm to 80 mm
600# (THREADED & SOCKET WELD)	STEAM	600 PSI @ 1125ºF	4138 KPa @ 607ºC
	W.O.G.	1440 PSI @ 100ºF	9932 KPa @ 38ºC

KECKLEY

TECHNICAL DATA
DIMENSIONS AND WEIGHTS

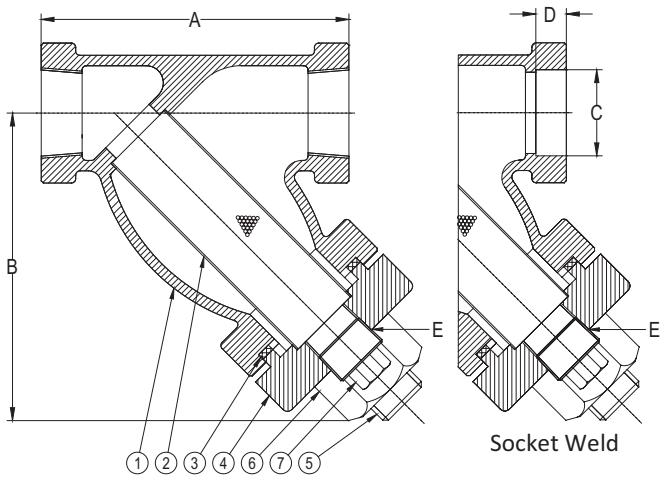

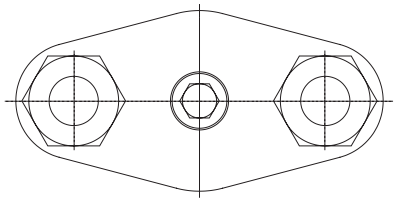

Style SSB-7BC

Y-Strainer, 600 lb. Threaded & Socket Weld
Bolted Cover
Stainless Steel (ASTM A 351, Grade CF8M)

PARTS LIST

ITEM	DESCRIPTION	MATERIAL
1	Body	Stainless Steel (ASTM A 351, Grade CF8M)
2	Screen	Stainless Steel (304)
3	Gasket	Spiral Wound Stainless Steel (304)
4	Cap	Stainless Steel (ASTM A 351, Grade CF8M)
5	Stud	Stainless Steel (ASTM A 193, Grade B8)
6	Nut	Stainless Steel (ASTM A 194, Grade 8)
7	Plug	Stainless Steel (ASTM A 182, Grade F-304)

*Optional Body Materials Available in 304 and 400 Series SS, Alloy 20, Hastelloy, Inconel, Monel and Stellite..

STANDARD SCREENS SUPPLIED

SIZE			SCREEN PERFORATION					
			FOR STEAM		OPEN AREA	FOR LIQ-UID		OPEN AREA
in	mm		in	mm		in	mm	

Standard screens supplied are for **steam service**, unless otherwise specified.
Options: Other perforations, meshes, and screen materials are available.

SIZE		DIMENSIONS										WEIGHTS	
		A		B		C		D		E			
in	mm	in	mm	in	mm	in	mm	in	mm	in	mm	lbs	kgs
1/4	8	3	76	2-1/2	63	0.555	14	3/8	10	1/4	8	3	1.14
3/8	10	3	76	2-1/2	63	0.690	18	3/8	10	1/4	8	3	1.14
1/2	15	3-7/8	99	3-1/4	83	0.855	22	3/8	10	1/4	8	3	1.14
3/4	20	4-1/4	108	4-1/4	108	1.065	27	1/2	13	3/8	10	3	1.32
1	22	4-15/16	125	4-5/8	117	1.330	34	1/2	13	1/2	15	6	2.33
1-1/4	32	5-5/8	143	5-1/2	140	1.675	43	1/2	13	3/4	20	10	4.30
1-1/2	40	6-1/4	159	6-1/4	159	1.915	49	1/2	13	3/4	20	12	5.43
2	50	7-1/2	191	7-1/4	184	2.406	61	5/8	16	1	25	18	7.74
2-1/2	65	12	305	9-3/8	238	2.906	74	5/8	16	1-1/4	32	49	22.00
3	80	12	305	9-3/8	238	3.535	90	5/8	16	1-1/4	32	49	22.00

Certified dimensional drawings are available upon request.
†This table reflects only the nearest metric equivalents.

FLOW COEFFICIENTS

Size	C_V	Size	C_V	Size	C_V
1/4"	9.5	1"	30	2-1/2"	129.7
3/8"	9.5	1-1/4"	44.9	3"	161.3
1/2"	9.5	1-1/2"	61		
3/4"	18.7	2"	98		

TOTAL SCREEN AREA

Size	(in^2)	Size	(in^2)	Size	(in^2)
1/4"	4.36	1"	13.84	2-1/2"	69.82
3/8"	4.36	1-1/4"	20.83	3"	69.82
1/2"	4.36	1-1/2"	24.02		
3/4"	9.37	2"	35.48		

*See DETERMINING RATIOS on page S5 of the Strainer Information Section for calculating NET FREE AREA of the screen to inside pipe area.

PRESSURE vs. TEMPERATURE CHART
600# Threaded & Socket Weld Stainless Steel (ASTM A 351, Grade CF8M)

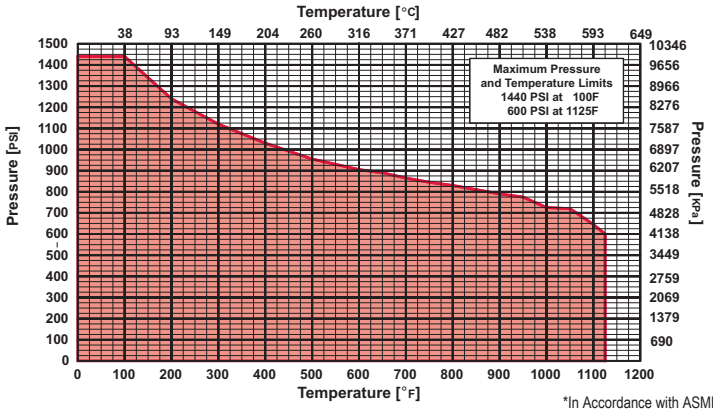

*In Accordance with ASME B16.34

KECKLEY

Style SSB

Y-Strainer
Stainless Steel (ASTM A 351, Grade CF8M)
1500 lb. Threaded
1500 lb. Socket Weld

Cast 316 Stainless Steel Y-Strainer

APPLICATIONS

Steam, water, oil or gas where protection from foreign matter in a pipeline is required.

CONSTRUCTION

The Keckley Style SSB stainers are constructed from rugged 316 stainless steel castings that are machined to exacting specifications.

Socket Weld bore is in compliance with ASME B16.11 unless otherwise specified.

FEATURES

The Keckley Style SSB strainer features a machined groove in the body and cap for proper alignment and to ensure accurate reseating when servicing is required. The gasket is 304 stainless steel spiral wound and is compressed between the body and cover (for maximum strength and durability) and designed for both high pressure and high temperature service. The cover is not supplied with a blow-off hole.

SCREENS

Standard perforated 304 stainless steel screens are spot welded along the seam for maximum strength. Different size perforations and meshes are available in stainless steel, monel, and brass to meet specific media requirements. If media is not indicated, screens for *steam* will be supplied.

SELF CLEANING

Warning: See Maintenance Instructions on page S6 of the Strainer Information Section for additional precautions and detailed information on servicing the strainer.

WORKING PRESSURES - NON SHOCK

NOM. RATING	MEDIA	1/2" to 3"	15 mm to 80 mm
1500# (THREADED & SOCKET WELD)	STEAM	1500 PSI @ 1125ºF	10346 KPa @ 607ºC
	W.O.G.	3600 PSI @ 100ºF	24829 KPa @ 38ºC

KECKLEY

TECHNICAL DATA
DIMENSIONS AND WEIGHTS

Style SSB

Y-Strainer, 1500 lb. Threaded & Socket Weld Stainless Steel (ASTM A 351, Grade CF8M)

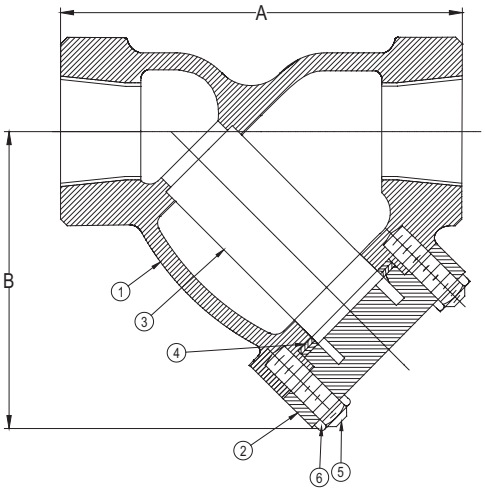

Threaded

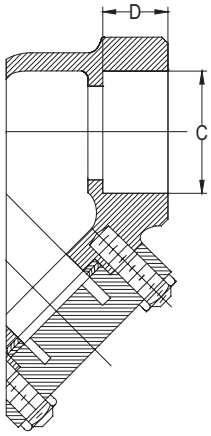

Socket Weld

PARTS LIST		
ITEM	DESCRIPTION	MATERIAL
1*	Body	Stainless Steel (ASTM A 351, Grade CF8M)
2	Cover	Stainless Steel (ASTM A 351, Grade CF8M)
3	Screen	Stainless Steel (304)
4	Gasket	Spiral Wound Stainless Steel (304)
5	Studs	Stainless Steel (ASTM A 193, Grade B8)
6	Nuts	Stainless Steel (ASTM A 194, Grade 8)

*Optional Body Materials Available in 304 and 400 Series SS, Alloy 20, Hastelloy, Inconel, Monel and Stellite.

STANDARD SCREENS SUPPLIED

SIZE			SCREEN PERFORATION					
			FOR STEAM		OPEN AREA	FOR LIQ-UID		OPEN AREA
in	mm		in	mm		in	mm	

Standard screens supplied are for **steam service**, unless otherwise specified.
Options: Other perforations, meshes, and screen materials are available.

SIZE		DIMENSIONS								WEIGHTS	
		A		B		C		D			
in	mm	in	mm	in	mm	in	mm	in	mm	lbs	kgs
1/2	15	3-15/16	100	3	76	0.855	22	3/8	10	10	5
3/4	20	4-1/4	108	3-3/4	95	1.065	27	1/2	13	12	5
1	25	5	127	5	127	1.330	34	1/2	13	15	7
1-1/4	32	8-3/8	213	5-1/2	140	1.675	43	1/2	13	22	10
1-1/2	40	8-3/8	213	5-1/2	140	1.915	49	1/2	13	22	10
2	50	9-5/16	237	7-3/8	187	2.406	61	5/8	16	30	14
2-1/2	65	12	305	10-1/2	267	2.906	74	5/8	16	50	23
3	80	12	305	10-1/2	267	3.535	90	5/8	16	50	23

Certified dimensional drawings are available upon request.
†This table reflects only the nearest metric equivalents.

FLOW COEFFICIENTS

Size	C_V	Size	C_V	Size	C_V
1/2"	9	1-1/4"	45	2-1/2"	129
3/4"	18	1-1/2"	60	3"	170
1"	30	2"	98		

TOTAL SCREEN AREA

Size	(in²)	Size	(in²)	Size	(in²)
1/2"	5.97	1-1/4"	27.94	2-1/2"	77.80
3/4"	9.73	1-1/2"	27.94	3"	79.48
1"	17.55	2"	38.08		

*See DETERMINING RATIOS on page S5 of the Strainer Information Section for calculating NET FREE AREA of the screen to inside pipe area.

PRESSURE vs. TEMPERATURE CHART

1500# Threaded & Socket Weld Stainless Steel (ASTM A 351, Grade CF8M)

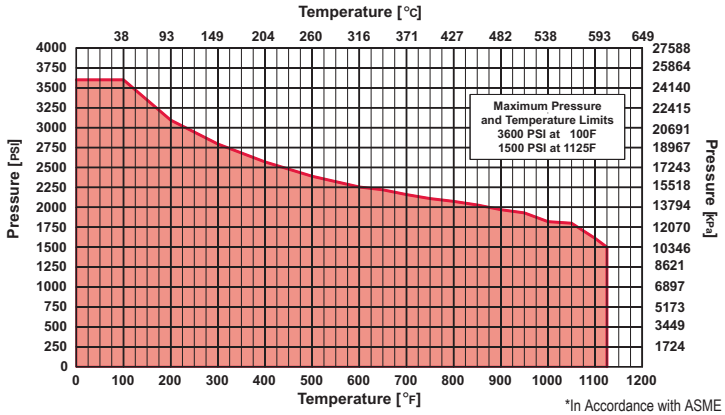

*In Accordance with ASME B16.34

KECKLEY

Style SSA-7

Y-Strainer
Stainless Steel (ASTM A 351, Grade CF8M)
150 lb. & 300 lb. Flanged

Cast 316 Stainless Steel Y-Strainer

APPLICATIONS

Steam, water, oil or gas where protection from foreign matter in a pipeline is required.

CONSTRUCTION

The Keckley Style SSA-7 stainers are constructed from rugged 316 stainless steel castings and are machined to exacting specifications. These bodies have drilled flanges that are in accordance with ASME B16.5. All flanges come standard with back-faced bolt holes.

FEATURES

The Keckley Style SSA-7 strainer features a machined groove in both the body and cover for proper screen alignment and to ensure accurate reseating when servicing is required. The gasket is 304 stainless steel spiral wound and is compressed between the body and cover (for maximum strength and durability) and designed for high pressure and high temperature service. All Keckley Style SSA-7 strainers have cap screws and can be furnished with a stainless steel blow-off plug upon request.

Blind covers are available upon request.

SCREENS

Standard perforated 304 stainless steel screens are spot welded along the seam for maximum strength. Different size perforations and meshes are available in stainless steel, monel, and brass to meet specific media requirements. If media is not indicated, screens for *steam* will be supplied.

SELF CLEANING

Self cleaning is accomplished by opening the valve or drain plug connected to the blow-off port. **Warning:** See Maintenance Instructions on page S6 of the Strainer Information Section for additional precautions and detailed information on servicing the strainer.

WORKING PRESSURES - NON SHOCK

NOM. RATING	MEDIA	1/2" to 12"	15 mm to 300 mm
150# R.F. & D. (STANDARD FLANGE)	STEAM	150 PSI @ 565ºF	1035 KPa @ 296ºC
	W.O.G.	275 PSI @ 100ºF	1897 KPa @ 38ºC
NOM. RATING	**MEDIA**	**1/2" to 12"**	**15 mm to 300 mm**
300# R.F. & D. (EX. HEAVY FLANGE)	STEAM	300 PSI @ 1125ºF	2069 KPa @ 607ºC
	W.O.G.	720 PSI @ 100ºF	4966 KPa @ 38ºC

KECKLEY

TECHNICAL DATA
DIMENSIONS AND WEIGHTS

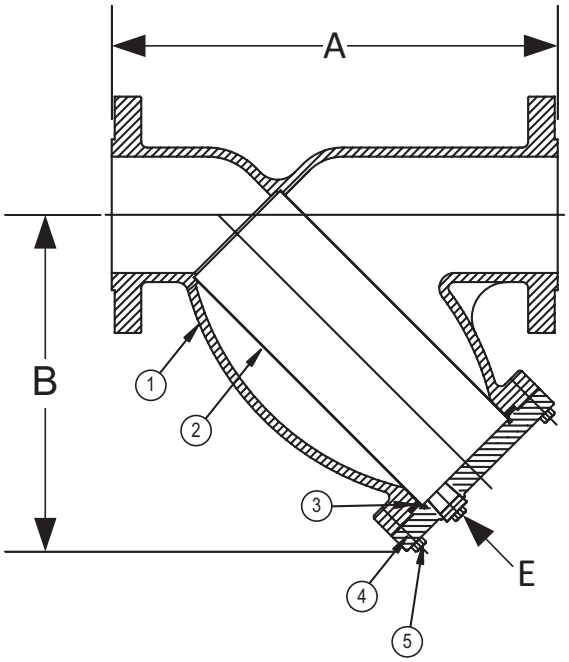

Style SSA-7

Y-Strainer, 150 lb. & 300 lb. Flanged
Stainless Steel (ASTM A 351, Grade CF8M)

PARTS LIST		
ITEM	DESCRIPTION	MATERIAL
1*	Body	Stainless Steel (ASTM A 351, Grade CF8M)
2	Screen	Stainless Steel (304)
3	Gasket	Spiral Wound Stainless Steel (304)
4	Cover	Stainless Steel (ASTM A 351, Grade CF8M)
5	Hex Head Cap Screw	Stainless Steel (ASTM A 193, Grade B8)

Optional: Blow-off Plug, Stainless Steel (304).
*Optional Body Materials Available in 304 and 400 Series SS, Alloy 20, Hastelloy, Inconel, Monel and Stellite.

STANDARD SCREENS SUPPLIED

SIZE			SCREEN PERFORATION					
			FOR STEAM		OPEN AREA	FOR LIQ-UID		OPEN AREA
in	mm		in	mm		in	mm	
1/2 to 4	15 to 100	28	3/64	1.2	33%	1/16	1.6	30%
5 to 10	125 to 250	22	3/64	1.2	33%	1/8	3.2	43%

Standard screens supplied are for **steam service**, unless otherwise specified.
Options: Other perforations, meshes, and screen materials are available.

SIZE		DIMENSIONS										WEIGHTS			
		A				B				E					
		150#		300#		150#		300#		150# & 300#		150#		300#	
in	mm	in	mm	in	mm	in	mm	in	mm	in	mm	lbs	kgs	lbs	kgs
1/2	15	6-1/2	165	6-1/8	156	3-3/4	95	3-3/4	95	3/8	10	7	3.02	8	3.45
3/4	20	7-3/8	187	7-3/4	197	4-1/4	108	4-1/4	108	1/2	15	10	4.46	13	5.68
1	25	7-3/8	187	7-7/8	200	4-1/4	108	4-1/4	108	1/2	15	10	4.28	13	5.59
1-1/4	32	7	178	8-1/8	206	5-1/8	130	5-1/8	130	1/2	15	13	5.86	21	9.28
1-1/2	40	7-1/8	181	8-1/4	210	5-1/8	130	5-1/8	130	1/2	15	14	6.20	21	9.37
2	50	7-7/8	200	9-1/2	241	6	152	6	152	1/2	15	23	10.15	27	11.83
2-1/2	65	9-3/4	248	10-3/8	264	7	178	7	178	1	25	36	16.16	41	18.53
3	80	10-1/16	256	12	305	7-7/16	189	7-5/16	186	1	25	40	17.76	56	25.06
4	100	12-1/8	308	14-1/2	368	8-15/16	227	8-15/16	227	1-1/2	40	61	27.26	95	42.83
5	125	15-1/2	394	19-5/16	491	13-1/32	331	13-1/32	331	2	50	101	45.58	189	85.72
6	150	18-1/2	470	19-5/16	491	13-1/4	337	13-1/4	337	2	50	134	60.72	189	85.57
8	200	21-3/8	543	23-3/8	594	15-1/2	394	15-1/2	394	2	50	224	101.30	320	144.91
10	250	26	660	27-3/8	695	18-7/16	468	18-7/16	468	2	50	326	147.49	481	218.01
12	300	29-7/8	759	32	813	21-5/8	549	21-5/8	549	2	50	622	282.08	839	380.12
14	350	34-1/2	876	36	914	25	635	25	635	2	50	791	358.62	1017	460.96

Certified dimensional drawings are available upon request.
†This table reflects only the nearest metric equivalents.

TOTAL SCREEN AREA

Size	(in²)	Size	(in²)	Size	(in²)	Size	(in²)
1/2"	6.46	1-1/2"	18.68	4"	91.89	10"	532.80
3/4"	12.32	2"	30.28	5"	209.41	12"	600.71
1"	12.32	2-1/2"	46.91	6"	241.18	*(Total screen area listed for 150 lb. class only)*	
1-1/4"	18.68	3"	57.62	8"	342.86		

*See DETERMINING RATIOS on page S5 of the Strainer Information Section for calculating NET FREE AREA of the screen to inside pipe area.

PRESSURE vs. TEMPERATURE CHART

150# & 300# Flanged Stainless Steel (ASTM A 351, Grade CF8M)

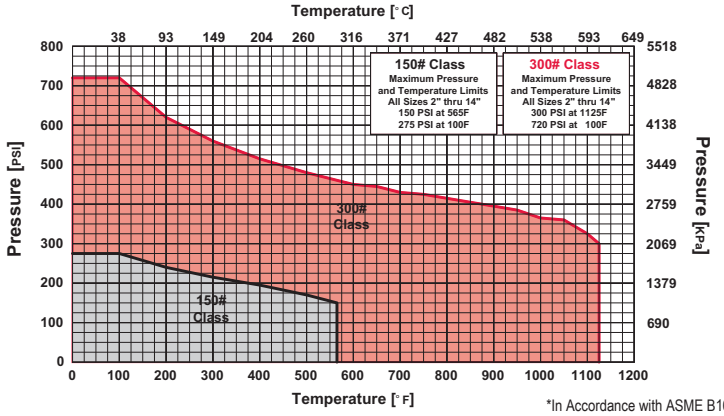

*In Accordance with ASME B16.5

KECKLEY

Style SSA

Y-Strainer
Stainless Steel (ASTM A 351, Grade CF8M)
600 lb. Flanged

Cast 316 Stainless Steel Y-Strainer

APPLICATIONS

Steam, water, oil or gas where protection from foreign matter in a pipeline is required.

CONSTRUCTION

The Keckley Style SSA stainers are constructed from rugged 316 stainless steel castings and are machined to exacting specifications. These bodies have drilled flanges that are in accordance with ASME B16.5. All flanges come standard with back-faced bolt holes.

FEATURES

The Keckley Style SSA strainer features a machined groove in both the body and cover for proper screen alignment and to ensure accurate reseating when servicing is required. The gasket is 304 stainless steel spiral wound and is compressed between the body and cover (for maximum strength and durability) and designed for high pressure and high temperature service. All Keckley Style SSA strainers have cap screws and can be furnished with a stainless steel blow-off plug upon request.

Blind covers are available upon request.

SCREENS

Standard perforated 304 stainless steel screens are spot welded along the seam for maximum strength. Different size perforations and meshes are available in stainless steel, monel, and brass to meet specific media requirements. If media is not indicated, screens for *steam* will be supplied.

SELF CLEANING

Self cleaning is accomplished by opening the valve or drain plug connected to the blow-off port. **Warning:** See Maintenance Instructions on page S6 of the Strainer Information Section for additional precautions and detailed information on servicing the strainer.

WORKING PRESSURES - NON SHOCK

NOM. RATING	MEDIA	1/2" to 12"	15 mm to 300 mm
600# R.F. & D. (FLANGE)	STEAM	600 PSI @ 1125ºF	4138 KPa @ 607ºC
	W.O.G.	1440 PSI @ 100ºF	9932 KPa @ 38ºC

KECKLEY

TECHNICAL DATA
DIMENSIONS AND WEIGHTS

Style SSA

Y-Strainer, 600 lb. Flanged
Stainless Steel (ASTM A 351, Grade CF8M)

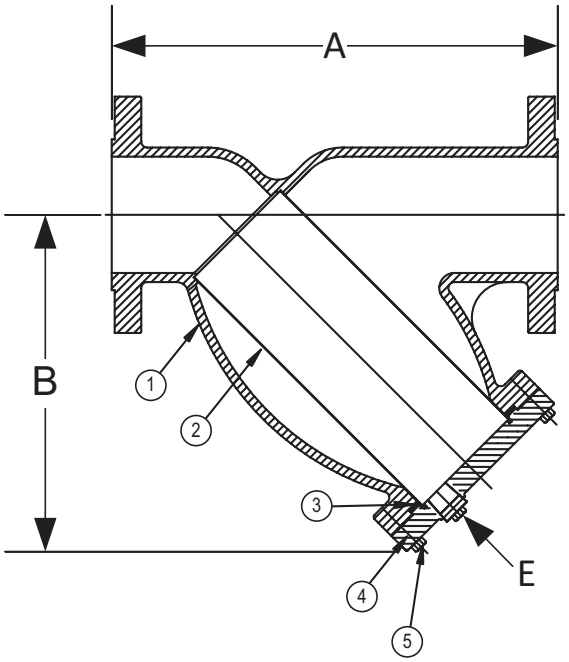

PARTS LIST		
ITEM	DESCRIPTION	MATERIAL
1	Body	Stainless Steel (ASTM A 351, Grade CF8M)
2	Screen	Stainless Steel (304)
3	Gasket	Spiral Wound Stainless Steel (304)
4	Cover	Stainless Steel (ASTM A 351, Grade CF8M)
5	Hex Head Cap Screw	Stainless Steel (ASTM A 193, Grade B8)

Optional: Blow-off Plug, Stainless Steel (304).
*Optional Body Materials Available in 304 and 400 SS, Alloy 20, Hastelloy, Inconel, Monel and Stellite.

STANDARD SCREENS SUPPLIED

SIZE			SCREEN PERFORATION					
			FOR STEAM		OPEN AREA	FOR LIQ-UID		OPEN AREA
in	mm		in	mm		in	mm	
2 to 4	50 to 100	28	3/64	1.2	33%	1/16	1.6	30%
5 to 10	125 to 250	22	3/64	1.2	33%	1/8	3.2	43%

Standard screens supplied are for **steam service**, unless otherwise specified.
Options: Other perforations, meshes, and screen materials are available.

SIZE		DIMENSIONS						WEIGHTS	
		A		B		E			
in	mm	in	mm	in	mm	in	mm	lbs	kgs
1/2	15	6-5/8	168	3-1/2	89	3/8	10	15	6.80
3/4	20	8-3/8	213	3-3/4	95	1/2	15	20	9.07
1	25	8-3/8	213	3-3/4	95	1/2	15	20	9.07
1-1/4	32	10-1/8	257	5-1/2	140	1/2	15	27	12.25
1-1/2	40	10-1/4	360	5-1/2	140	1/2	15	27	12.25
2	50	11	279	7	178	1/2	15	31	13.83
2-1/2	65	12	305	8-1/4	210	1	25	49	21.92
3	80	13-1/2	343	9-1/4	235	1	25	63	28.17
4	100	18	457	12-1/2	318	1-1/2	40	127	57.53
6	150	25-5/8	651	20	508	2	50	339	153.51
8	200	31-3/4	806	24	610	2	50	748	338.84
10	250	37-3/4	959	28-1/2	724	2	50	1213	550.00
12	300	45-1/2	1156	34-1/2	876	2	50	1511	685.00

Larger sizes available upon request.
†This table reflects only the nearest metric equivalents.

TOTAL SCREEN AREA

Size	(in²)	Size	(in²)	Size	(in²)	Size	(in²)
1/2"	--	1-1/2"	--	4"	151.49	12"	1313.88
3/4"	--	2"	44.17	6"	416.73		
1"	--	2-1/2"	64.14	8"	630.23		
1-1/4"	--	3"	77.63	10"	894.52		

*See DETERMINING RATIOS on page S5 of the Strainer Information Section for calculating NET FREE AREA of the screen to inside pipe area.

PRESSURE vs. TEMPERATURE CHART

600# Flanged Stainless Steel (ASTM A 351, Grade CF8M)

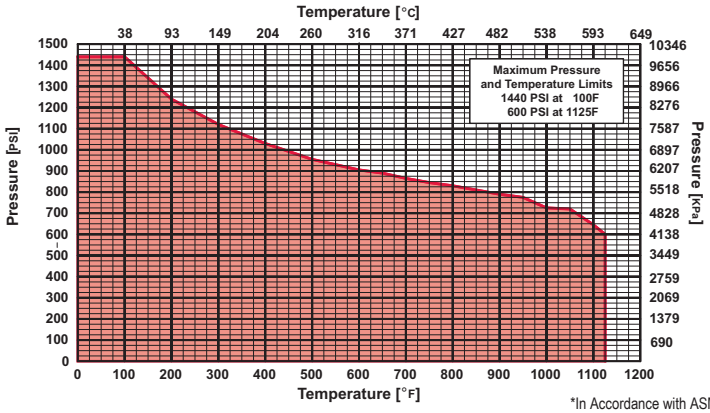

*In Accordance with ASME B16.5

KECKLEY

Style SSA-7

Y-Strainer
Stainless Steel (ASTM A 351, Grade CF8M)
150 lb. & 300 lb. Butt Weld

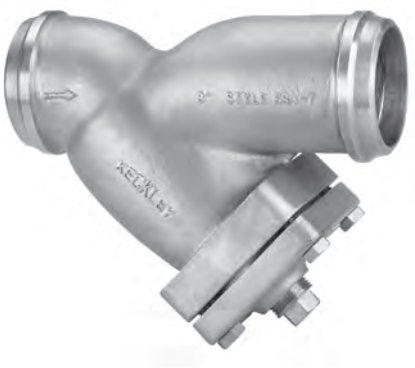

Cast 316 Stainless Steel Y-Strainer

APPLICATIONS

Steam, water, oil or gas where protection from foreign matter in a pipeline is required.

CONSTRUCTION

The Keckley Style SSA-7 stainers are constructed from rugged 316 stainless steel castings and are machined to exacting specifications.

Style SSA-7 butt weld connections will be machined to match schedule 40 pipe.

FEATURES

The Keckley Style SSA-7 strainer features a machined groove in both the body and cover for proper screen alignment and to ensure accurate reseating when servicing is required. The gasket is 304 stainless steel spiral wound and is compressed between the body and cover (for maximum strength and durability) and designed for high pressure and high temperature service. All Keckley Style SSA-7 strainers have cap screws and can be furnished with a stainless steel blow-off plug upon request.

Blind covers are available upon request.

SCREENS

Standard perforated 304 stainless steel screens are spot welded along the seam for maximum strength. Different size perforations and meshes are available in stainless steel, monel, and brass to meet specific media requirements. If media is not indicated, screens for *steam* will be supplied.

SELF CLEANING

Self cleaning is accomplished by opening the valve or drain plug connected to the blow-off port. **Warning:** See Maintenance Instructions on page S6 of the Strainer Information Section for additional precautions and detailed information on servicing the strainer.

WORKING PRESSURES - NON SHOCK

NOM. RATING	MEDIA	1/2" to 12"	15 mm to 300 mm
150# (BUTT WELD)	STEAM	150 PSI @ 565ºF	1035 KPa @ 296ºC
	W.O.G.	275 PSI @ 100ºF	1897 KPa @ 38ºC
NOM. RATING	**MEDIA**	**1/2" to 12"**	**15 mm to 300 mm**
300# (BUTT WELD)	STEAM	300 PSI @ 1125ºF	2069 KPa @ 607ºC
	W.O.G.	720 PSI @ 100ºF	4977 KPa @ 38ºC

KECKLEY

TECHNICAL DATA
DIMENSIONS AND WEIGHTS

Style SSA-7

Y-Strainer, 150 lb. & 300 lb. Butt Weld
Stainless Steel (ASTM A 351, Grade CF8M)

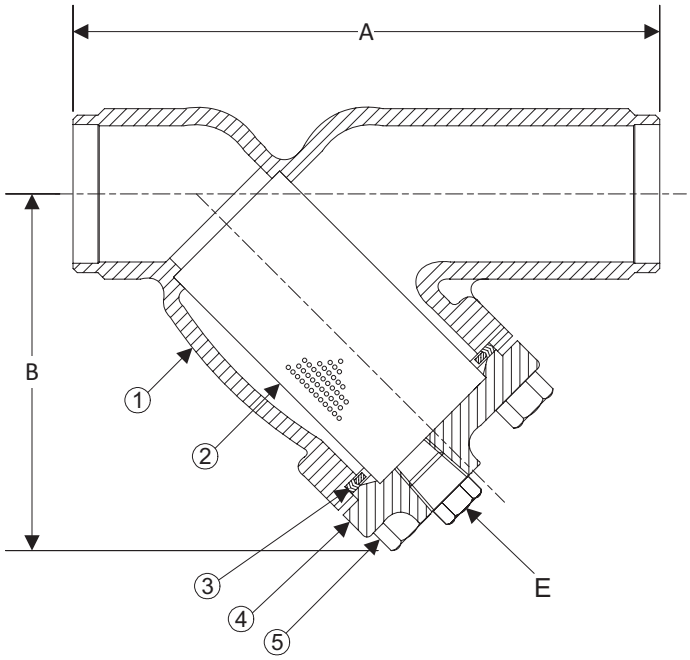

PARTS LIST		
ITEM	DESCRIPTION	MATERIAL
1*	Body	Stainless Steel (ASTM A 351, Grade CF8M)
2	Screen	Stainless Steel (304)
3	Gasket	Spiral Wound Stainless Steel (304)
4	Cover	Stainless Steel (ASTM A 351, Grade CF8M)
5	Hex Head Cap Screw	Stainless Steel (ASTM A 193, Grade B8)

Optional: Blow-off Plug, Stainless Steel (304).
*Optional Body Materials Available in 304 and 400 Series SS, Alloy 20, Hastelloy, Inconel, Monel and Stellite.

STANDARD SCREENS SUPPLIED

SIZE			SCREEN PERFORATION					
			FOR STEAM		OPEN AREA	FOR LIQ-UID		OPEN AREA
in	mm		in	mm		in	mm	
1/2 to 4	15 to 100	28	3/64	1.2	33%	1/16	1.6	30%
5 to 10	125 to 250	22	3/64	1.2	33%	1/8	3.2	43%

Standard screens supplied are for **steam service**, unless otherwise specified.
Options: Other perforations, meshes, and screen materials are available.

SIZE		DIMENSIONS										WEIGHTS			
		A				B				E					
		150#		300#		150#		300#		150# & 300#		150#		300#	
in	mm	in	mm	in	mm	in	mm	in	mm	in	mm	lbs	kgs	lbs	kgs
1/2	15	6-1/2	165	6-1/8	156	3-3/4	95	3-3/4	95	3/8	10	6	2.72	6	2.72
3/4	20	7-3/8	187	7-3/4	197	4-1/4	108	4-1/4	108	1/2	15	8	3.63	10	4.53
1	25	7-3/8	187	7-7/8	200	4-1/4	108	4-1/4	108	1/2	15	8	3.63	10	4.53
1-1/4	32	7	178	8-1/8	206	5-1/8	130	5-1/8	130	1/2	15	10	4.53	15	6.80
1-1/2	40	7-1/8	181	8-1/4	210	5-1/8	130	5-1/8	130	1/2	15	11	4.99	15	6.80
2	50	7-7/8	200	9-1/2	241	6	152	6	152	1/2	15	14	5.93	16	6.92
2-1/2	65	9-3/4	248	10-3/8	264	7	178	7	178	1	25	19	8.56	23	10.06
3	80	10-1/16	256	12	305	7-7/16	189	7-5/16	186	1	25	21	9.46	50	22.65
4	100	12-1/8	308	14-1/2	368	8-15/16	227	8-15/16	227	1-1/2	40	37	16.77	57	25.80
5	125	15-1/2	394	19-5/16	491	13-1/32	331	13-1/32	331	2	50	84	37.85	145	65.36
6	150	18-1/2	470	19-5/16	491	13-1/4	337	13-1/4	337	2	50	104	46.87	145	65.36
8	200	21-3/8	543	23-3/8	594	15-1/2	394	15-1/2	394	2	50	149	67.51	247	111.80
10	250	26	660	27-3/8	695	18-7/16	468	18-7/16	468	2	50	261	118.25	346	156.52
12	300	29-7/8	759	32	813	21-5/8	549	21-5/8	549	2	50	452	204.68	575	260.58

Certified dimensional drawings are available upon request.
†This table reflects only the nearest metric equivalents.

TOTAL SCREEN AREA

Size	(in²)	Size	(in²)	Size	(in²)	Size	(in²)
1/2"	6.46	1-1/2"	18.68	4"	91.89	10"	532.80
3/4"	12.32	2"	30.28	5"	209.41	12"	600.71
1"	12.32	2-1/2"	46.91	6"	241.18	*(Total screen area listed for 150 lb. class only)*	
1-1/4"	18.68	3"	57.62	8"	342.86		

*See DETERMINING RATIOS on page S5 of the Strainer Information Section for calculating NET FREE AREA of the screen to inside pipe area.

PRESSURE vs. TEMPERATURE CHART

150# & 300# Butt Weld Stainless Steel (ASTM A 351, Grade CF8M)

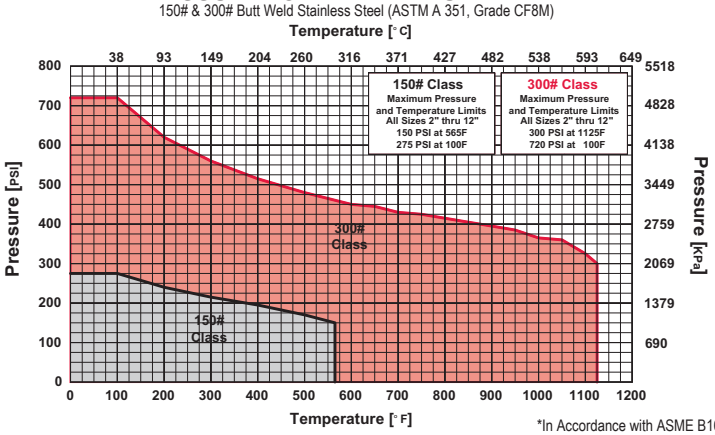

*In Accordance with ASME B16.34

KECKLEY

Style SSA

Y-Strainer
Stainless Steel (ASTM A 351, Grade CF8M)
600 lb. Butt Weld

Cast 316 Stainless Steel Y-Strainer

APPLICATIONS

Steam, water, oil or gas where protection from foreign matter in a pipeline is required.

CONSTRUCTION

The Keckley Style SSA stainers are constructed from rugged 316 stainless steel castings and are machined to exacting specifications.

Style SSA 600 lb. butt weld connections will be machined to match schedule 80 pipe unless otherwise specified.

FEATURES

The Keckley Style SSA strainer features a machined groove in both the body and cover for proper screen alignment and to ensure accurate reseating when servicing is required. The gasket is 304 stainless steel spiral wound and is compressed between the body and cover (for maximum strength and durability) and designed for high pressure and high temperature service. All Keckley Style SSA strainers have cap screws and can be furnished with a stainless steel blow-off plug upon request.

Blind covers are available upon request.

SCREENS

Standard perforated 304 stainless steel screens are spot welded along the seam for maximum strength. Different size perforations and meshes are available in stainless steel, monel, and brass to meet specific media requirements. If media is not indicated, screens for *steam* will be supplied.

SELF CLEANING

Self cleaning is accomplished by opening the valve or drain plug connected to the blow-off port. **Warning:** See Maintenance Instructions on page S6 of the Strainer Information Section for additional precautions and detailed information on servicing the strainer.

WORKING PRESSURES - NON SHOCK

NOM. RATING	MEDIA	1/2" to 12"	15 mm to 300 mm
600# (BUTT WELD)	STEAM	600 PSI @ 1125ºF	4138 KPa @ 607ºC
	W.O.G.	1440 PSI @ 100ºF	9932 KPa @ 38ºC

KECKLEY

TECHNICAL DATA
DIMENSIONS AND WEIGHTS

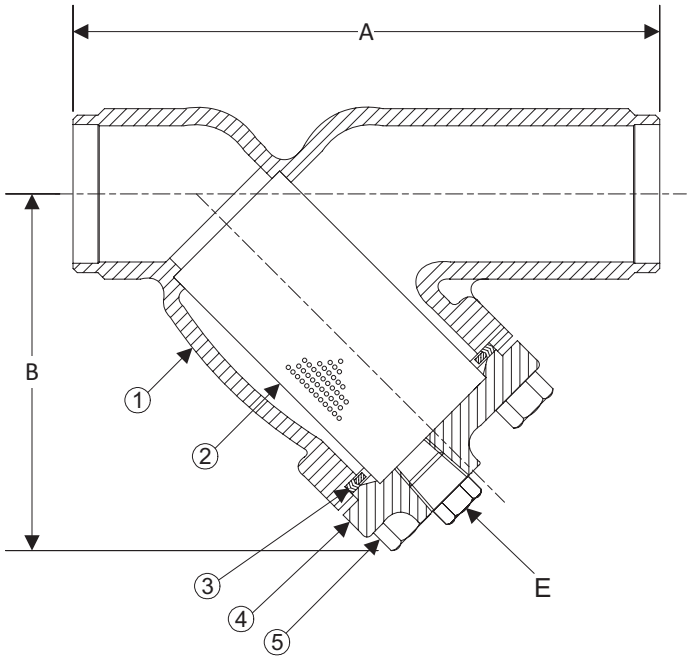

Style SSA

Y-Strainer, 600 lb. Butt Weld
Stainless Steel (ASTM A 351, Grade CF8M)

PARTS LIST		
ITEM	DESCRIPTION	MATERIAL
1	Body	Stainless Steel (ASTM A 351, Grade CF8M)
2	Screen	Stainless Steel (304)
3	Gasket	Spiral Wound Stainless Steel (304)
4	Cover	Stainless Steel (ASTM A 351, Grade CF8M)
5	Hex Head Cap Screw	Stainless Steel (ASTM A 193, Grade B8)

Optional: Blow-off Plug, Stainless Steel (304).
*Optional Body Materials Available in 304 and 400 Series SS, Alloy 20, Hastelloy, Inconel, Monel and Stellite.

STANDARD SCREENS SUPPLIED

SIZE			SCREEN PERFORATION					
			FOR STEAM		OPEN AREA	FOR LIQ-UID		OPEN AREA
in	mm		in	mm		in	mm	
2 to 4	50 to 100	28	3/64	1.2	33%	1/16	1.6	30%
5 to 10	125 to 250	22	3/64	1.2	33%	1/8	3.2	43%

Standard screens supplied are for **steam service**, unless otherwise specified.
Options: Other perforations, meshes, and screen materials are available.

SIZE		DIMENSIONS						WEIGHTS	
		A		B		E			
in	mm	in	mm	in	mm	in	mm	lbs	kgs
1/2	15	6-5/8	168	3-1/2	89	3/8	10	9	4.08
3/4	20	8-3/8	213	3-3/4	95	1/2	15	11	4.99
1	25	8-3/8	213	3-3/4	95	1/2	15	11	4.99
1-1/4	32	10-1/8	257	5-1/2	140	1/2	15	13	5.89
1-1/2	40	10-1/4	360	5-1/2	140	1/2	15	13	5.89
2	50	11	279	7	178	1/2	15	15	6.80
2-1/2	65	12	305	8-1/4	210	1	25	30	13.60
3	80	13-1/2	343	9-1/4	235	1	25	33	14.97
4	100	18	457	12-1/2	318	1-1/2	40	77	34.93
6	150	25-5/8	651	20	508	2	50	217	98.43
8	200	31-3/4	806	24	610	2	50	386	175.09
10	250	37-3/4	959	28-1/2	724	2	50	668	303.00
12	300	45-1/2	1156	34-1/2	876	2	50	831	376.94

Larger sizes available upon request.
†This table reflects only the nearest metric equivalents.

TOTAL SCREEN AREA

Size	(in²)	Size	(in²)	Size	(in²)	Size	(in²)
1/2"	--	1-1/2"	--	4"	151.49	12"	1313.88
3/4"	--	2"	44.17	6"	416.73		
1"	--	2-1/2"	64.14	8"	630.23		
1-1/4"	--	3"	77.63	10"	894.52		

*See DETERMINING RATIOS on page S5 of the Strainer Information Section for calculating NET FREE AREA of the screen to inside pipe area.

PRESSURE vs. TEMPERATURE CHART

600# Butt Weld Stainless Steel (ASTM A 351, Grade CF8M)

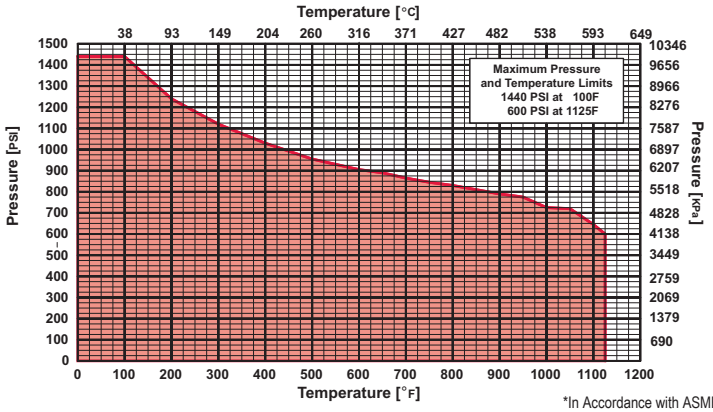

*In Accordance with ASME B16.34

KECKLEY

PRESSURE DROP CHART

Threaded "Y" Pattern Strainers (Styles B, BDI, E-150, F-150, F-300, SB, SB-7, SSB and SSB-7)

This pressure drop chart is based on the flow of clean water through the Keckley "Y" strainers listed above with screen perforations ranging from 3/64" through 1/8" and is additionally for use with those units equipped with a 20 mesh screen as standard.

TO USE CHARTS:

Find your desired rate of flow (GPM) on the left hand side of the chart. Follow its corresponding horizontal line to the point where it intersects the diagonal line indicating the strainer pipe size. From this point of intersection, follow the vertical line down to the bottom of the chart to determine the approximate pressure drop.

CORRECTION FACTORS:

For finer mesh screens that are backed with a perforated sheet, multiply the pressure drops shown at right by the following:

40 mesh	x 1.2
60 mesh	x 1.4
80 mesh	x 1.6
100 mesh	x 1.7

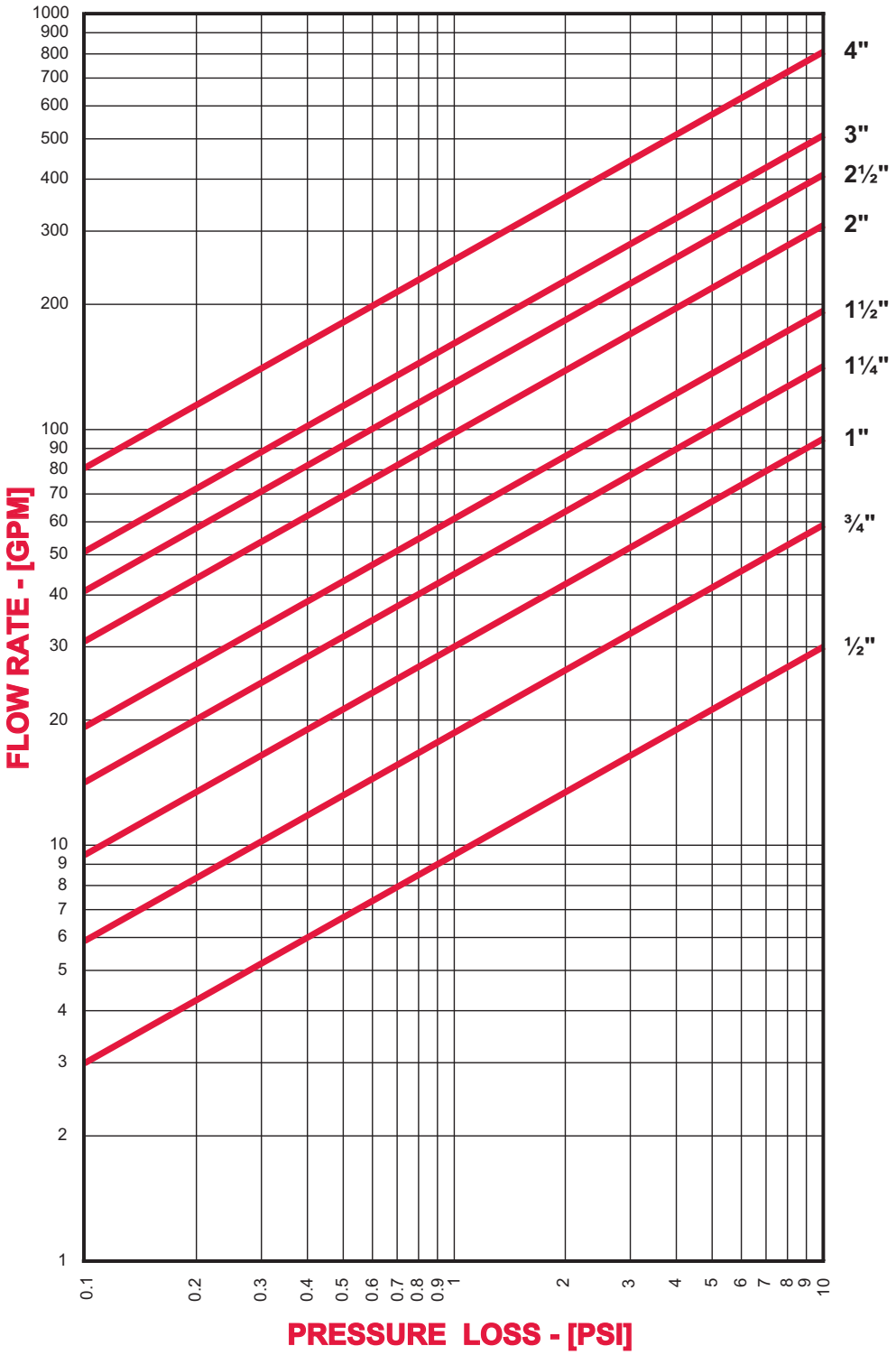

KECKLEY

PRESSURE DROP CHART

Flanged "Y" Pattern Strainers (Styles A, BA, BA-7, SA, SA-7, SSA and SSA-7)

This pressure drop chart is based on the flow of clean water through the Keckley "Y" strainers listed above with screen perforations ranging from 3/64" through 1/8".

TO USE CHARTS:

Find your desired rate of flow (GPM) on the left hand side of the chart. Follow its corresponding horizontal line to the point where it intersects the diagonal line indicating the strainer pipe size. From this point of intersection, follow the vertical line down to the bottom of the chart to determine the approximate pressure drop.

CORRECTION FACTORS:

For finer mesh screens that are backed with a perforated sheet, multiply the pressure drops shown at right by the following:

40 mesh	x 1.2
60 mesh	x 1.4
80 mesh	x 1.6
100 mesh	x 1.7

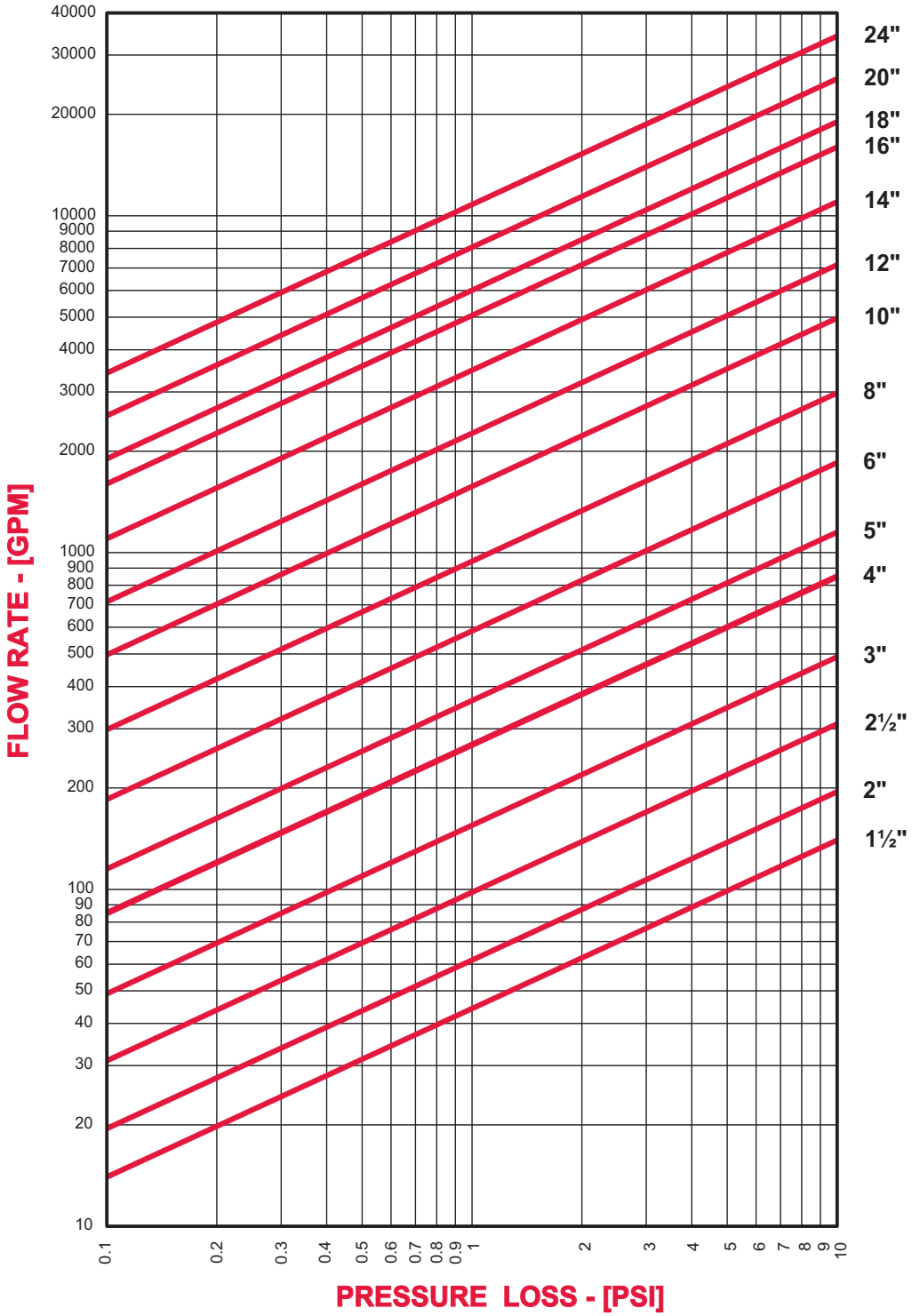

KECKLEY

PRESSURE DROP CHART

Threaded "Y" Pattern Strainers (Styles B7)

This pressure drop chart is based on the flow of clean water through the Keckley "Y" strainers listed above with screen perforations ranging from 3/64" through 1/8" and is additionally for use with those units equipped with a 20 mesh screen as standard.

TO USE CHARTS:

Find your desired rate of flow (GPM) on the left hand side of the chart. Follow its corresponding horizontal line to the point where it intersects the diagonal line indicating the strainer pipe size. From this point of intersection, follow the vertical line down to the bottom of the chart to determine the approximate pressure drop.

CORRECTION FACTORS:

For finer mesh screens that are backed with a perforated sheet, multiply the pressure drops shown at right by the following:

40 mesh	x 1.2
60 mesh	x 1.4
80 mesh	x 1.6
100 mesh	x 1.7

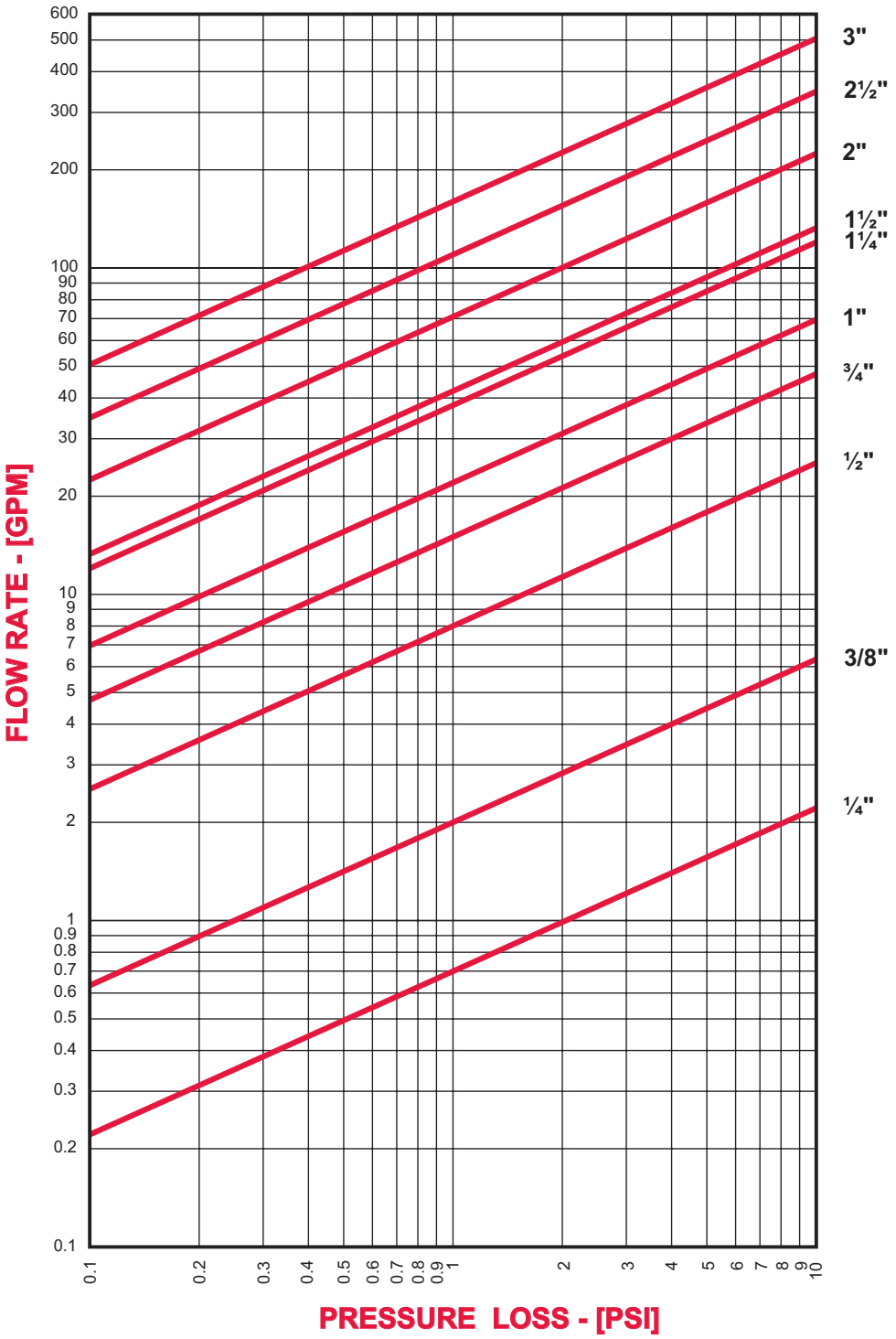

KECKLEY

Basket Strainer

Iron Body (ASTM A 126, CLASS B)

Style D 250# Threaded ½”– 2” 2
Style DV 250# Threaded ½”– 2” 2
Technical Data..... 3

Style KT-7 125# Threaded ⅜” – 3” 4
Technical Data..... 5

Style D 125# Flange 2” – 12” 6
Style D 250# Flange 2” – 12” 6
Style DV 125# Flange 2” – 12” 6
Style DV 250# Flange 2” – 12” 6
Technical Data..... 7

Style GFV 125# Flange 2” – 16” 8
Style GFV 250# Flange 2” – 6” 8
Technical Data..... 9

Style GFV-K 125# Flange 2” – 12” 10
Technical Data..... 11

Ductile Iron Body (ASTM A 536, GRADE 65-45-12)

Style KF-7 150# Flange 1½”– 12”..... 12
Technical Data..... 13

Bronze Body (ASTM B 62, C83600)

Style BGFV 150# Flange 1½” – 12”..... 14
Style BGFV 300# Flange 1½” – 12”..... 14
Technical Data..... 15

Bronze Body (Cont.) (ASTM B 62, C83600)

Style BD 125# Flange 2” – 12”..... 16
Style BD 250# Flange 2” – 12”..... 16
Style BDV 125# Flange 2” – 12”..... 16
Style BDV 250# Flange 2” – 12”..... 16
Technical Data..... 17

Nickel Aluminum Bronze Body (ASTM B 148, C95800)

Style BKF-7 150# Flange 1½”– 12” 18
Technical Data..... 19

Carbon Steel Body (ASTM A 216, Grade WCB)

Style SD 300# Threaded ⅜” – 3”..... 20
Style SD-K 150# Threaded ⅜” – 3”..... 20
Technical Data..... 21

Style SGFV 150# Flange 2” – 14” 22
Style SGFV-K 150# Flange 2” – 14”..... 22
Style SGFV 300# Flange 2” – 14” 22
Technical Data..... 23

316 Stainless Steel Body (ASTM A 351, GRADE CF8M)

Style SSD 300# Threaded ⅜” – 3”..... 24
Style SSD-K 150# Threaded ⅜” – 3” 24
Technical Data..... 25

Style SSGFV 150# Flange 2” – 14”..... 26
Style SSGFV-K 150# Flange 2” – 14”..... 26
Style SSGFV 300# Flange 2” – 14”..... 26
Technical Data..... 27

Pressure Drop Charts

Styles D, DV, BD, BDV, SD, SD-K, SSD, and SSD-K 28
Styles GFV, HLC, BGFV, SGFV, SGFV-K, SSGFV, and SSGFV-K..... 29
Styles BKF-7 and KF-7..... 30
Style KT-7 31

KECKLEY

Style D & DV

Basket Strainer
Cast Iron (ASTM A 126, Class B)
250 lb. Threaded

½" - 1½" supplied with a threaded cover.

2" supplied with a bolted cover.

Cast Iron Basket Strainer

APPLICATIONS

Steam, water, oil or gas where protection from foreign matter in a pipeline is required.

CONSTRUCTION

The Keckley Style D strainers are constructed from rugged cast iron castings that are machined to exacting specifications.

FEATURES

The Keckley Style D & DV strainers feature a machined basket seat to minimize particle bypass. The Style D strainer in sizes 1-1/2" and smaller, use a threaded bushing to seat the basket screen in the body. In the 2" size strainer, a synthetic fiber gasket is compressed between the body and cover for maximum strength and durability. All Keckley Style D & DV strainers are furnished standard with a tapped and plugged NPT drain connection.

BASKETS

Standard baskets are 304 stainless steel and are spot welded for maximum strength. Different size perforations and meshes are available in stainless steel, monel, and brass to meet specific media requirements. If media is not indicated, screens for *water* will be supplied.

CLEANING

Cleaning of the Style D strainer is accomplished by removing the cover and pulling out the basket. The Style DV basket has an open bottom and is cleaned by blowing trapped material out through the blow-off connection similar to a "Y" type strainer. **Warning:** See Maintenance Instructions on page S6 of the Strainer Information Section for additional precautions and detailed information on servicing the strainer.

WORKING PRESSURES - NON SHOCK

NOM. RATING	MEDIA	1/2" to 2"	15 mm to 50 mm
250# (Threaded)	STEAM	250 PSI @ 406ºF	1724 KPa @ 208ºC
	W.O.G.	400 PSI @ 150ºF	2759 KPa @ 66ºC

GOVERNMENT/MILITARY SPECIFICATIONS

Style D & DV cast iron threaded basket strainers meet or exceed government specification WW-S-2739 (Supersedes MIL-S-16293).

KECKLEY

TECHNICAL DATA
DIMENSIONS AND WEIGHTS

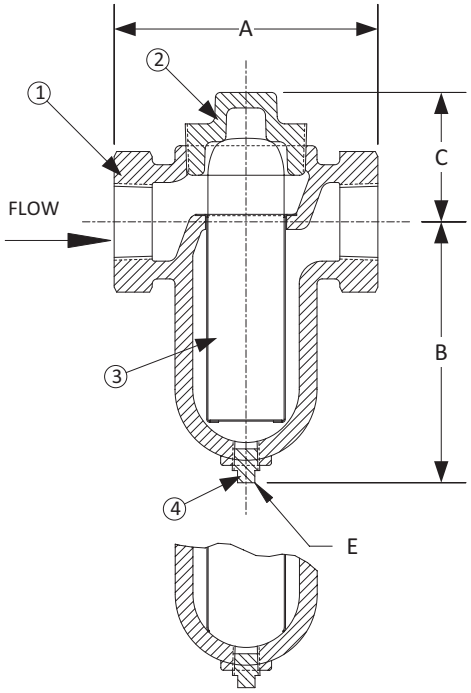

Style DV - With
Open Bottom Basket

Style D & DV

Basket Strainer, 250 lb. Threaded
Cast Iron (ASTM A 126, Class B)

PARTS LIST		
ITEM	DESCRIPTION	MATERIAL
1	Body	Cast Iron (ASTM A 126, Class B)
2	Cover Cap*	Malleable Iron
3	Basket	Stainless Steel (304)
4	Pipe Plug	Cast Iron

*2" Size has a bolted cap with gasket.

STANDARD SCREENS SUPPLIED

SIZE		SCREEN GAGE	SCREEN PERFORATION					
			FOR STEAM		OPEN AREA	FOR LIQ-UID		OPEN AREA
in	mm		in	mm		in	mm	

Standard screens supplied are for **liquid service**, unless otherwise specified.
Options: Other meshes, perforations, and screen materials are available.

SIZE		DIMENSIONS								WEIGHTS	
		A		B		C		E			
in	mm	in	mm	in	mm	in	mm	in	mm	lbs	kgs
1/2	15	5-1/8	130	4-5/8	118	2-13/16	71	3/8	10	6	3
3/4	20	5-1/8	130	4-5/8	118	2-13/16	71	3/8	10	6	3
1	25	5-1/8	130	4-5/8	118	2-13/16	71	3/8	10	6	3
1-1/4	32	6-1/2	165	6-7/16	164	2-3/4	70	3/8	10	16	7
1-1/2	40	6-1/2	165	6-7/16	164	2-3/4	70	3/8	10	16	7
2	50	8-3/4	222	3-15/16	100	5-1/4	133	1/2	15	20	9

Certified dimensional drawings are available upon request.
†This table reflects only the nearest metric equivalents.

FLOW COEFFICIENTS

Size	C_V	Size	C_V	Size	C_V
1/2"	19.9	1"	19.9	1-1/2"	35.4
3/4"	19.9	1-1/4"	35.4	2"	55.7

TOTAL SCREEN AREA

Size	(in^2)	Size	(in^2)	Size	(in^2)
1/2"	20.26	1"	20.26	1-1/2"	34.91
3/4"	20.26	1-1/4"	34.391	2"	39.45

*See DETERMINING RATIOS on page S5 of the Strainer Information Section for calculating NET FREE AREA of the screen to inside pipe area.

PRESSURE vs. TEMPERATURE CHART

250# Threaded Cast Iron (ASTM A 126, Class B)

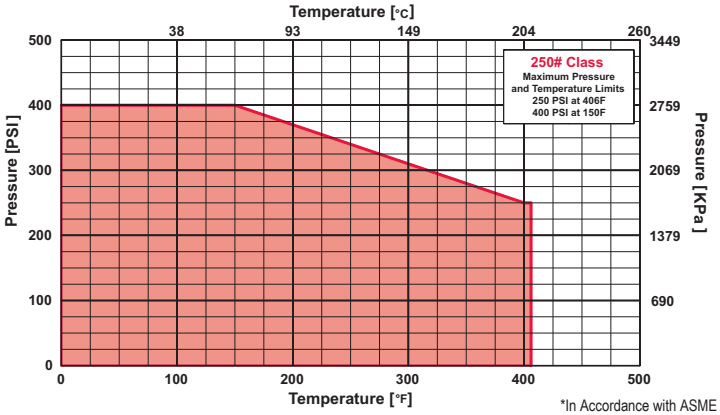

*In Accordance with ASME B16.4

KECKLEY

Style KT-7

Basket Strainer
Cast Iron (ASTM A 126, Class B)
125 lb. Threaded

Cast Iron Basket Strainer

APPLICATIONS

Water, oil or gas where protection from foreign matter in a pipeline is required.

CONSTRUCTION

The Keckley Style KT-7 strainers are constructed from rugged cast iron castings and are machined to exacting specifications.

FEATURES

The Keckley threaded KT-7 strainers feature a machined basket seat to minimize particle bypass. The Style KT-7 is furnished with a Buna-N o-ring and is limited to 150°F. Keckley threaded Style KT-7 strainers have knobs for quick opening. All units are furnished standard with a tapped and plugged NPT drain connection.

BASKETS

Standard baskets are 304 stainless steel and are spot welded for maximum strength. Different size perforations and meshes are available in stainless steel, monel, and brass to meet specific media requirements. If media is not indicated, screens for *water* will be supplied.

CLEANING

Cleaning of the Style KT-7 strainer is accomplished by removing the cover and pulling out the basket. **Warning:** See Maintenance Instructions on page S6 of the Strainer Information Section for additional precautions and detailed information on servicing the strainer.

WORKING PRESSURES - NON SHOCK

NOM. RATING	MEDIA	3/8" to 3"	10 mm to 80 mm
125# (Threaded)	W.O.G.	200 PSI @ 150ºF	1379 KPa @ 66ºC

KECKLEY

TECHNICAL DATA
DIMENSIONS AND WEIGHTS

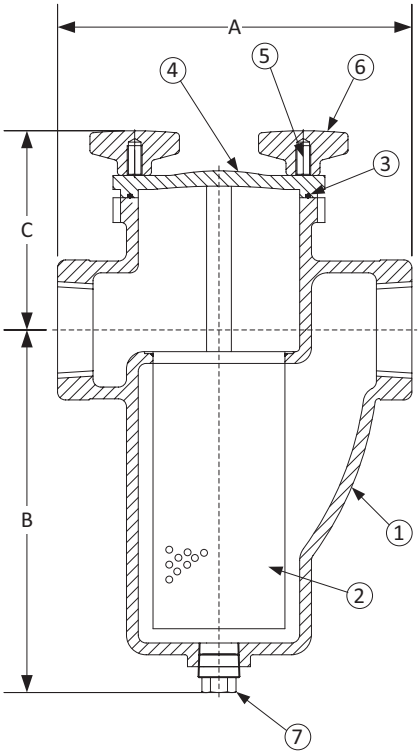

Style KT-7

Basket Strainer, 125 lb. Threaded
Cast Iron (ASTM A 126, Class B)

PARTS LIST		
ITEM	DESCRIPTION	MATERIAL
1	Body	Cast Iron (ASTM A 126, Class B)
2	Basket	Stainless Steel (304)
3	O-ring	Buna-N (Max Temperature 150°F)
4	Cover	Cast Iron (ASTM A 126, Class B)
5	Studs	Carbon Steel (ASTM A 193, Grade B7)
6	Knobs	Cast Iron (ASTM A 126, Class B)
7	Plug	Cast Iron (ASTM A 126, Class B)

STANDARD SCREENS SUPPLIED

SIZE		SCREEN GAGE	SCREEN PERFORATION FOR LIQUID		OPEN AREA
in	mm		in	mm	
3/8 to 3	10 to 80	28	1/16	1.6	30%

Options: Other meshes, perforations, and screen materials are available.

SIZE		DIMENSIONS								WEIGHTS	
		A		B		C		E			
in	mm	in	mm	in	mm	in	mm	in	mm	lbs	kgs
3/8	10	4-9/16	116	4	102	3-1/8	79	3/8	10	7	2.9
1/2	15	4-9/16	116	4	102	3-1/8	79	3/8	10	7	2.9
3/4	20	4-9/16	116	4	102	3-1/8	79	3/8	10	7	2.9
1	25	5-5/16	135	4-7/8	124	3	76	3/8	10	10	4.2
1-1/4	32	6-5/16	160	6-1/2	165	4-1/8	105	1/2	15	17	7.5
1-1/2	40	6-5/16	160	6-1/2	165	4-1/8	105	1/2	15	17	7.5
2	50	8-1/4	210	7-7/8	200	4-3/4	121	3/4	20	28	12.3
2-1/2	65	9-5/8	245	8-3/4	222	4	102	1	25	31	13.8
3	80	11-1/4	286	11-3/8	289	5-7/8	149	1	25	45	20.2

Certified dimensional drawings are available upon request.
†This table reflects only the nearest metric equivalents.

FLOW COEFFICIENTS

Size	C_V	Size	C_V	Size	C_V
3/8"	15	1"	24	2"	70
1/2"	15	1-1/4"	44	2-1/2"	121
3/4"	15	1-1/2"	44	3"	158

TOTAL SCREEN AREA

Size	(in^2)	Size	(in^2)	Size	(in^2)
3/8"	12.56	1"	20.17	2"	67.75
1/2"	12.56	1-1/4"	40.23	2-1/2"	75.57
3/4"	12.56	1-1/2"	40.23	3"	132.89

*See DETERMINING RATIOS on page S5 of the Strainer Information Section for calculating NET FREE AREA of the screen to inside pipe area.

KECKLEY

Style D & DV

Basket Strainer
Cast Iron (ASTM A 126, Class B)
125 lb. & 250 lb. Flanged

Cast Iron Basket Strainer

APPLICATIONS

Steam, water, oil or gas where protection from foreign matter in a pipeline is required.

CONSTRUCTION

The Keckley Style D & DV strainers are constructed from rugged cast iron castings that are machined to exacting specifications. These bodies have drilled flanges that are in accordance with ASME B16.1.

FEATURES

The Keckley Style D & DV strainers feature a machined basket seat to minimize particle bypass. All sizes have a bolted top cover flange for ease in basket removal. The gasket is a synthetic fiber gasket is compressed between the body and cover for maximum strength and durability. All Keckley Style D & DV strainers are furnished standard with a tapped and plugged NPT drain connection.

BASKETS

Standard baskets are 304 stainless steel and are spot welded for maximum strength. Different size perforations and meshes are available in stainless steel, monel, and brass to meet specific media requirements. If media is not indicated, screens for *water* will be supplied.

CLEANING

Cleaning of the Style D strainer is accomplished by removing the cover and pulling out the basket. The Style DV basket has an open bottom and is cleaned by blowing trapped material out through the blow-off connection similar to a "Y" type strainer. **Warning:** See Maintenance Instructions on page S6 of the Strainer Information Section for additional precautions and detailed information on servicing the strainer.

WORKING PRESSURES - NON SHOCK

NOM. RATING	MEDIA	2" to 12"	50 mm to 300 mm
125# F.F. & D (STANDARD FLANGE)	STEAM	125 PSI @ 450ºF	862 KPa @ 232ºC
	W.O.G.	200 PSI @ 150ºF	1379 KPa @ 66ºC
NOM. RATING	**MEDIA**	**2" to 12"**	**50 mm to 300 mm**
250# R.F. & D (EX. HEAVY FLANGE)	STEAM	250 PSI @ 450ºF	1724 KPa @ 232ºC
	W.O.G.	500 PSI @ 150ºF	3449 KPa @ 66ºC

GOVERNMENT/MILITARY SPECIFICATIONS

Style D & DV cast iron flanged basket strainers meet or exceed government specification WW-S-2739 (Supersedes MIL-S-16293).

KECKLEY

TECHNICAL DATA
DIMENSIONS AND WEIGHTS

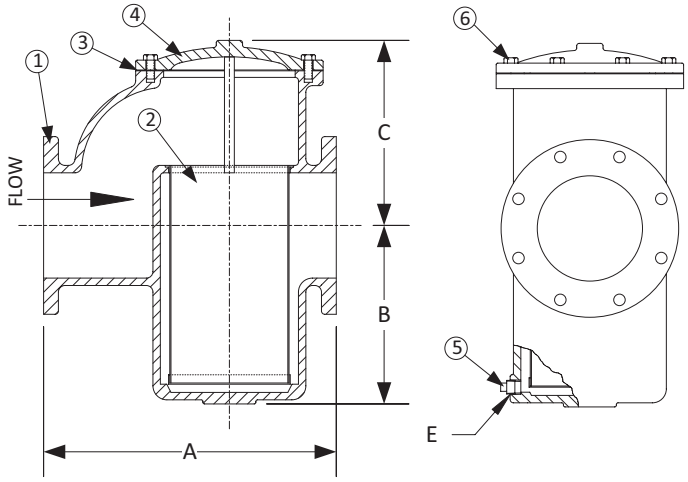

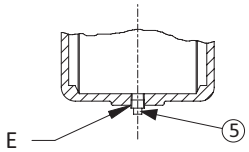

Style DV has a bottom blow off with an open bottom basket.

Style D & DV

Basket Strainer, 125 lb. & 250 lb. Flanged Cast Iron (ASTM A 126, Class B)

PARTS LIST		
ITEM	DESCRIPTION	MATERIAL
1	Body	Cast Iron (ASTM A 126, Class B)
2	Basket	Stainless Steel (304)
3	Gasket	Composition
4	Cover	Cast Iron (ASTM A 126, Class B)
5	Pipe Plug	Malleable Iron
6	Hex Head Cap Screws	Steel

STANDARD SCREENS SUPPLIED

SIZE		SCREEN GAGE	SCREEN PERFORATION					
			FOR STEAM		OPEN AREA	FOR LIQ-UID		OPEN AREA
in	mm		in	mm		in	mm	
2 to 5	50 to 125	28	1/16	1.6	30%	1/8	3.2	43%
6 to 8	150 to 200	24	1/8	3.2	43%	1/8	3.2	43%

Standard screens supplied are for **liquid service**, unless otherwise specified.
Options: Other meshes, perforations, and screen materials are available.

SIZE		DIMENSIONS										WEIGHTS			
		A				B		C		E					
		125#		250#		125# & 250#		125# & 250#		125# & 250#		125#		250#	
in	mm	in	mm	in	mm	in	mm	in	mm	in	mm	lbs	kgs	lbs	kgs
2	50	8	203	8-1/2	216	3-15/16	100	5-1/4	133	1/2	15	23	10	29	13
2-1/2	65	9	229	9-5/8	245	4	102	6	152	1/2	15	33	15	42	19
3	80	10	254	10-3/4	273	5	127	7	178	1/2	15	45	21	55	25
4	100	13-1/4	337	13-7/8	352	6-3/4	171	9-1/2	241	1/2	15	116	53	122	55
5	125	16-7/8	429	17-3/4	451	9-7/8	251	12	305	3/4	20	165	75	195	88
6	150	17	432	17-7/8	454	9-7/8	251	12	305	3/4	20	175	79	211	96
8	200	22-1/4	565	23-1/4	591	13-3/4	349	14	356	3/4	20	345	156	410	186
10	250	26	660	27-3/8	695	17	432	18	457	3/4	20	688	312	748	339
12	300	30-1/4	768	31-3/4	806	20-5/8	524	21	533	2	50	1135	515	1285	583

Certified dimensional drawings are available upon request.
†This table reflects only the nearest metric equivalents.

FLOW COEFFICIENTS

Size	C_V	Size	C_V	Size	C_V
2"	55.7	4"	208.7	8"	784.3
2-1/2"	88.5	5"	354.2	10"	1208.0
3"	123.3	6"	430.1	12"	1868.9

TOTAL SCREEN AREA

Size	(in^2)	Size	(in^2)	Size	(in^2)
2"	39.45	4"	152.58	8"	529.98
2-1/2"	51.66	5"	295.54	10"	808.58
3"	84.84	6"	295.54	12"	1252.0

*See DETERMINING RATIOS on page S5 of the Strainer Information Section for calculating NET FREE AREA of the screen to inside pipe area.

PRESSURE vs. TEMPERATURE CHART

125# & 250# Flanged Cast Iron (ASTM A 126, Class B)

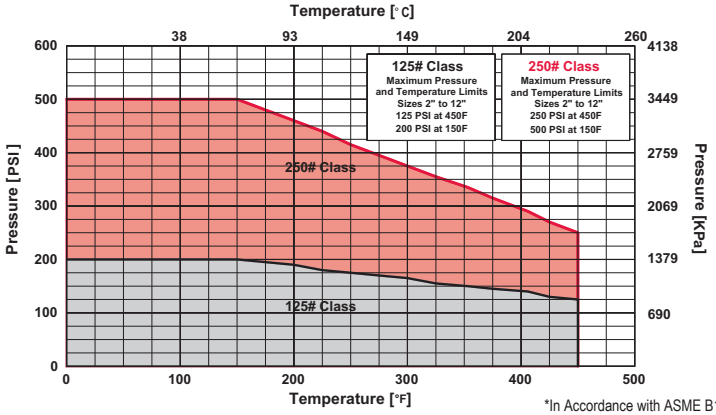

*In Accordance with ASME B16.1

KECKLEY

Style GFV

Basket Strainer
Cast Iron (ASTM A 126, Class B)
125 lb. & 250 lb. Flanged

Cast Iron Basket Strainer

APPLICATIONS

Steam, water, oil or gas where protection from foreign matter in a pipeline is required.

CONSTRUCTION

The Keckley Style GFV strainers are constructed from rugged cast iron castings that are machined to exacting specifications. These bodies have drilled flanges that are in accordance with ASME B16.1.

FEATURES

The Keckley Style GFV strainers feature a basket with an angular cutaway design to allow straight through flow and extremely low pressure loss. All sizes have a bolted top cover flange for ease in basket removal. The gasket is a synthetic fiber and is compressed between the body and cover for maximum strength and durability. Keckley Style GFV strainers are furnished standard with a tapped and plugged NPT drain connection.

BASKETS

Standard baskets are 304 stainless steel and are spot welded for maximum strength. Different size perforations and meshes are available in stainless steel, monel, and brass to meet specific media requirements. If media is not indicated, screens for *water* will be supplied.

CLEANING

Cleaning of the Style GFV strainer is accomplished by removing the cover and pulling out the basket. **Warning:** See Maintenance Instructions on page S6 of the Strainer Information Section for additional precautions and detailed information on servicing the strainer.

WORKING PRESSURES - NON SHOCK

NOM. RATING	MEDIA	2" to 12"	50 mm to 300 mm
125# F.F. & D (STANDARD FLANGE)	STEAM	125 PSI @ 450ºF	862 KPa @ 232ºC
	W.O.G.	200 PSI @ 150ºF	1379 KPa @ 66ºC
	MEDIA	**14" and UP**	**350 mm and UP**
	STEAM	100 PSI @ 353ºF	690 KPa @ 178ºC
	W.O.G.	150 PSI @ 150ºF	1035 KPa @ 66ºC
NOM. RATING	**MEDIA**	**2" to 6"**	**50 mm to 150 mm**
250# R.F. & D (EX. HEAVY FLANGE)	STEAM	250 PSI @ 450ºF	1724 KPa @ 232ºC
	W.O.G.	500 PSI @ 150ºF	3449 KPa @ 66ºC

GOVERNMENT/MILITARY SPECIFICATIONS

Style GFV cast iron flanged basket strainers meet or exceed government specification WW-S-2739 (Supersedes MIL-S-16293).

KECKLEY

TECHNICAL DATA
DIMENSIONS AND WEIGHTS

Style GFV

Basket Strainer, 125 lb. & 250 lb. Flanged Cast Iron (ASTM A 126, Class B)

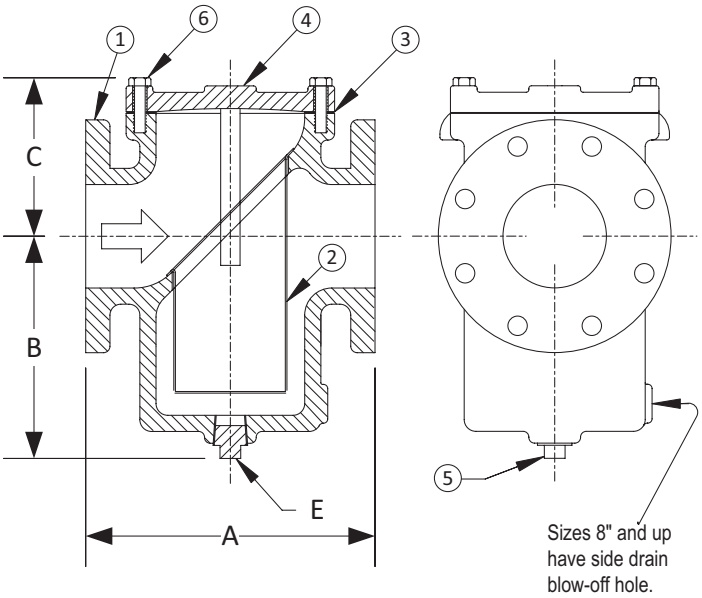

PARTS LIST		
ITEM	DESCRIPTION	MATERIAL
1	Body	Cast Iron (ASTM A 126, Class B)
2	Basket	Stainless Steel (304)
3	Gasket	Composition
4	Cover	Cast Iron (ASTM A 126, Class B)
5	Pipe Plug	Malleable Iron
6	Hex Head Cap Screws	Steel

STANDARD SCREENS SUPPLIED

SIZE		SCREEN GAGE	SCREEN PERFORATION					
			FOR STEAM		OPEN AREA	FOR LIQUID		OPEN AREA
in	mm		in	mm		in	mm	
2 to 4	50 to 100	28	3/64	1.2	33%	1/16	1.6	30%

Standard screens supplied are for **liquid service**, unless otherwise specified.
Options: Other meshes, perforations, and screen materials are available.

SIZE		DIMENSIONS															
		A				B				C				E			
		125#		250#		125#		250#		125#		250#		125#		250#	
in	mm	in	mm	in	mm	in	mm	in	mm	in	mm	in	mm	in	mm	in	mm
2	50	8	203	8-1/2	216	6	152	3-7/8	98	3-1/2	89	5-1/4	133	3/4	20	1/2	15
2-1/2	65	8-1/4	210	9-1/4	235	7	178	5-3/4	146	3-3/4	95	5-1/4	133	3/4	20	3/4	20
3	80	9-3/4	248	9-1/2	241	8-1/4	210	5-3/4	146	4-1/4	108	5-1/4	133	3/4	20	3/4	20
4	100	11-1/2	292	11-13/16	300	9	229	8-9/16	217	4-3/4	121	6	152	1	25	1	25
5	125	13-1/8	333	15-3/8	391	9-3/4	248	10-1/2	267	6	152	7-3/4	197	1	25	1	25
6	150	14-3/4	375	15-1/2	394	10-1/2	267	10-1/2	267	6-1/4	159	7-3/4	197	1	25	1	25
8	200	18-1/2	470	*See Style D 250 lb.*		12-3/4	324	*See Style D 250 lb.*		9	229	*See Style D 250 lb.*		1-1/2	40	*See Style D 250 lb.*	
10	250	20-1/8	511			14-3/4	375			10-3/4	273			1-1/2	40		
12	300	26-1/4	667			17-1/2	445			13-1/2	343			2	50		
14	350	30-1/4	768	*Consult Factory*		23-1/2	591	*Consult Factory*		14-1/4	362	*Consult Factory*		3	80	*Consult Factory*	
16	400	33-1/8	841			24-1/4	616			15	381			3	80		

Consult factory for sizes not shown.
Certified dimensional drawings are available upon request.
†This table reflects only the nearest metric equivalents.

WEIGHTS

Size		2"		3"	4"	5"	6"	8"	10"	12"	14"	16"
125	lbs	23	33	44	67	88	120	220	353	523	814	1041
	kgs	10	15	20	30	40	54	100	160	237	369	472
250	lbs	29	53	65	107	187	224	*See Style D 250 lb.*				
	kgs	13	24	29	49	85	102					

FLOW COEFFICIENTS

Size	C_V	Size	C_V	Size	C_V	Size	C_V
2"	42.7	4"	276.7	8"	1486.3	14"	7984.8
2-1/2"	77.5	5"	442.7	10"	3051.6	16"	9565.9
3"	120.2	6"	743.1	12"	4980.6		

TOTAL SCREEN AREA

Size	(in²)	Size	(in²)	Size	(in²)	Size	(in²)
2"	29.27	4"	108.44	8"	310.03	14"	1141.87
2-1/2"	45.11	5"	142.29	10"	457.06	16"	1428.51
3"	78.20	6"	176.75	12"	691.07		

*See DETERMINING RATIOS on page S5 of the Strainer Information Section for calculating NET FREE AREA of the screen to inside pipe area.

PRESSURE vs. TEMPERATURE CHART

125# & 250# Flanged Cast Iron (ASTM A 126, Class B)
Suitable for use with pipe sizes up to 12"

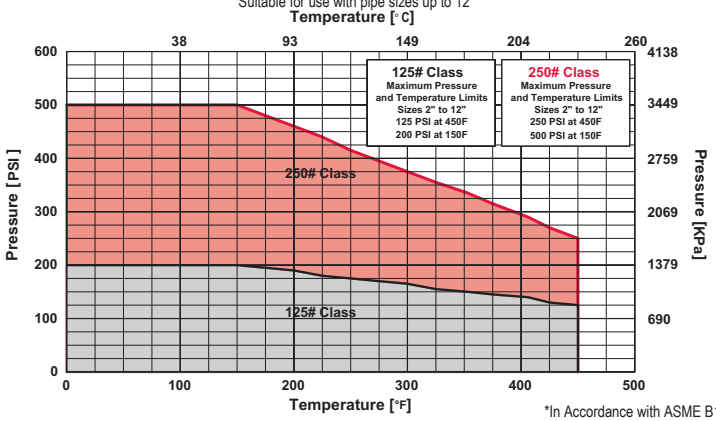

*In Accordance with ASME B16.1

KECKLEY

Style GFV-K

Basket Strainer
Cast Iron (ASTM A 126, Class B)
125 lb. Flanged
Clamp Cover

Cast Iron Basket Strainer

APPLICATIONS

The Keckley Style GFV-K is designed for liquid service where a quick open cover and protection from foreign matter in pipelines is required.

CONSTRUCTION

The Keckley Style GFV-K strainers are constructed from rugged cast iron castings and are machined to exacting specifications. These bodies have drilled flanges that are in accordance with ASME B16.1.

FEATURES

The Keckley Style GFV-K strainers feature a basket with an angular cutaway design to allow straight through flow and extremely low pressure loss. All sizes have a quick opening clamped cover for ease in basket removal. The Style GFV-K has an o-ring that is compressed between the body and cover for a positive shut off and to maximize durability. Keckley Style GFV-K strainers are furnished standard with a tapped and plugged NPT drain connection.

BASKETS

Standard baskets are 304 stainless steel and are spot welded for maximum strength. Different size perforations and meshes are available in stainless steel, monel, and brass to meet specific media requirements.

CLEANING

Cleaning of the Style GFV-K strainer is accomplished by removing the cover and pulling out the basket. **Warning:** See Maintenance Instructions on page S6 of the Strainer Information Section for additional precautions and detailed information on servicing the strainer.

WORKING PRESSURES - NON SHOCK

NOM. RATING	MEDIA	2” to 12”	50 mm to 300 mm
125# (Flanged)	W.O.G.	200 PSI @ 100ºF	1379 KPa @ 38ºC

KECKLEY

TECHNICAL DATA
DIMENSIONS AND WEIGHTS

Style GFV-K

Basket Strainer, 125 lb. Flanged
Cast Iron (ASTM A 126, Class B)

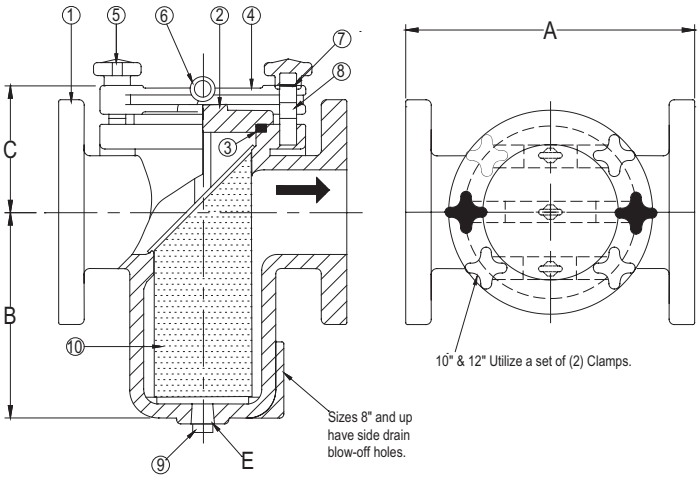

PARTS LIST		
ITEM	DESCRIPTION	MATERIAL
1	Body	Cast Iron (ASTM A 126, Class B)
2	Cover	Cast Ductile Iron (ASTM A 536, Grade 65-45-12)
3	O-ring	Nitrile
4	Clamp	Cast Ductile Iron (ASTM A 536, Grade 65-45-12)
5	Hand Nut	Cast Ductile Iron (ASTM A 536, Grade 65-45-12)
6	Eye Bolt	Carbon Steel (ASTM A 307)
7	Bushing	Stainless Steel (304)
8	Full Bolt	Carbon Steel (ASTM A 307)
9	Pipe Plug	Malleable Iron
10	Basket	Stainless Steel (304)

STANDARD SCREENS SUPPLIED

SIZE		SCREEN GAGE	SCREEN PERFORATION FOR LIQUID		OPEN AREA
in	mm		in	mm	
2 to 4	50 to 100	28	1/16	1.6	30%
5 to 12	125 to 300	24	1/8	3.2	43%

Options: Other meshes, perforations, and screen materials are available.

SIZE		DIMENSIONS								WEIGHTS	
		A		B		C		E			
in	mm	in	mm	in	mm	in	mm	in	mm	lbs	kgs
2	50	8	203.2	4-7/8	123	3-3/4	95	3/4	20	27	12
2-1/2	65	8-1/4	209.6	5-13/16	147	3-13/16	97	3/4	20	38	17
3	80	9-3/4	247.7	7-1/8	181	4-3/4	120	3/4	20	49	22
4	100	11-1/2	292.1	8	203	5-3/8	137	1	25	63	28.5
5	125	13-1/8	333.4	8-1/2	216	6-3/4	171	1	25	95	43
6	150	14-3/4	374.7	9-3/8	238	6-15/16	177	1	25	127	57.6
8	200	18-1/2	740	11-1/2	291	9-1/4	235	1-1/2	40	230	104.4
10	250	20-1/8	511.2	13-9/16	344	11	280	1-1/2	40	408	185
12	300	26-1/4	666.8	16-3/16	411	13-3/8	340	2	50	536	243

Certified dimensional drawings are available upon request.
†This table reflects only the nearest metric equivalents.

FLOW COEFFICIENTS

Size	C_V	Size	C_V	Size	C_V
2"	42.7	4"	276.7	8"	1486.3
2-1/2"	77.5	5"	442.7	10"	3051.6
3"	120.2	6"	743.1	12"	4980.6

TOTAL SCREEN AREA

Size	(in^2)	Size	(in^2)	Size	(in^2)
2"	23.63	4"	108.51	8"	310.23
2-1/2"	45.23	5"	142.25	10"	456.43
3"	78.11	6"	176.94	12"	690.83

*See DETERMINING RATIOS on page S5 of the Strainer Information Section for calculating NET FREE AREA of the screen to inside pipe area.

KECKLEY

Style KF-7

Basket Strainer
Ductile Iron (ASTM A 536, Grade 65-45-12)
150 lb. Flanged

Sizes 1½" to 8"

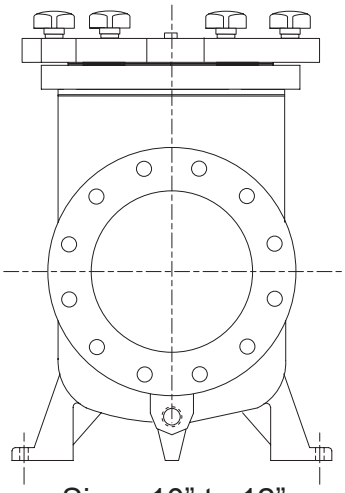

Sizes 10" to 12"

Cast Ductile Iron Basket Strainer

APPLICATIONS

Water, oil or gas where protection from foreign matter in a pipeline is required.

CONSTRUCTION

The Keckley Style KF-7 strainers are constructed from rugged cast ductile iron castings and are machined to exacting specifications. These bodies have drilled flanges that are in accordance with ASME B16.42.

FEATURES

The Keckley Style KF-7 strainers feature a machined basket seat to minimize particle bypass. All sizes have knob type fasteners securing the cover flange for tool free ease in basket removal. The Keckley Style KF-7 features a Buna-N o-ring that is compressed between the body and cover for maximum strength and durability and is limited to 150°F. All Keckley Style KF-7 strainers are furnished standard with a tapped and plugged NPT connection.

BASKETS

Standard baskets are 304 stainless steel and are spot welded for maximum strength. Different size perforations and meshes are available in stainless steel, monel, and brass to meet specific media requirements.

CLEANING

Cleaning of the Style KF-7 strainer is accomplished by removing the cover and pulling out the basket. **Warning:** See Maintenance Instructions on page S6 of the Strainer Information Section for additional precautions and detailed information on servicing the strainer.

WORKING PRESSURES - NON SHOCK

NOM. RATING	MEDIA	1-1/2" to 12"	40 mm to 300 mm
150# F.F. & D. (STANDARD FLANGE)	W.O.G.	200 PSI @ 100ºF	1379 KPa @ 38ºC

KECKLEY

TECHNICAL DATA
DIMENSIONS AND WEIGHTS

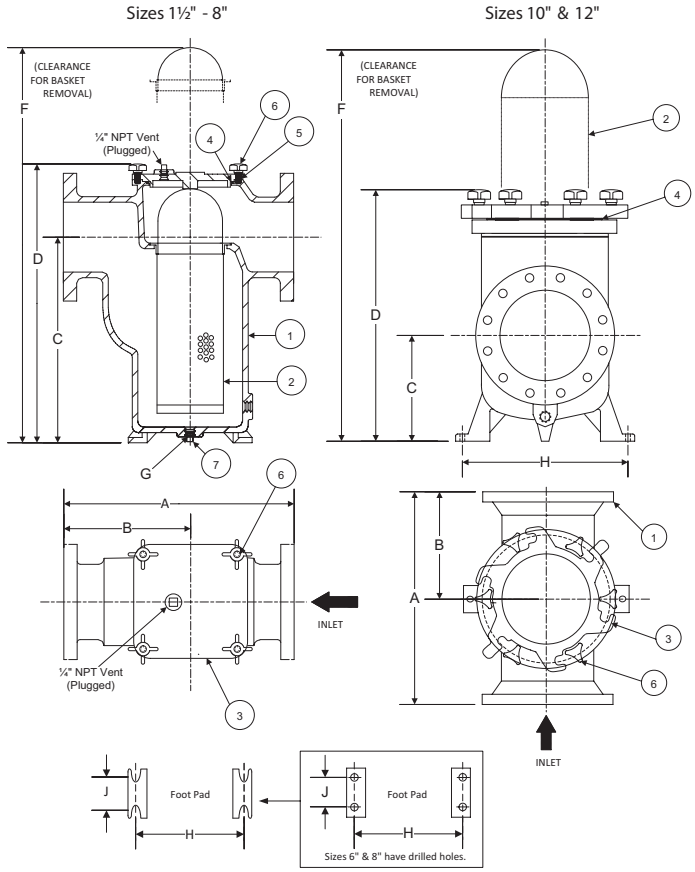

Style KF-7

Basket Strainer, 125 lb. Flanged
Ductile Iron (ASTM A 536, Grade 65-45-12)

PARTS LIST		
ITEM	DESCRIPTION	MATERIAL
1	Body	Ductile Iron (ASTM A 536, Grade 65-45-12)
2	Basket	Stainless Steel (304)
3	Cover	Ductile Iron (ASTM A 536, Grade 65-45-12)
4	O-ring	Buna-N (Max Temperature 150°F)
5	Stud	Carbon Steel (ASTM A 193, Grade B7)
6	Knob	Steel
7	Body Plug	Cast Iron

*Denotes Spare Parts.
†Sizes 6" and larger are furnished with round covers.

STANDARD SCREENS SUPPLIED

SIZE		SCREEN GAGE	SCREEN PERFORATION FOR LIQUID		OPEN AREA
in	mm		in	mm	
1-1/2 to 12	40 to 300	28 - 24	1/8	3.2	43%

Options: Other meshes, perforations, and screen materials are available.

Pipe Size		DIMENSION													
		A		B		C		D		F		G		H	
in	mm	in	mm	in	mm	in	mm	in	mm	in	mm	in	mm	in	mm
1-1/2	40	10.25	260	5.63	143	7.00	178	11.00	279	16	406	1/4	8	5.5	140
2	50	10.50	267	5.75	146	6.63	168	10.25	260	20	508	1/2	15	5.5	140
2-1/2	65	11.63	295	6.63	168	7.88	200	11.88	302	23	584	3/8	10	6.5	165
3	80	13.13	334	7.25	184	9.25	235	13.75	349	27	686	3/8	10	7.0	178
4	100	16.75	426	9.38	238	9.00	229	14.75	375	29	737	1/2	15	10.00	254
6	150	19.63	499	10.81	275	15.75	400	24.00	610	46	1168	1/2	15	10.00	254
8	200	27	686	16.00	406	27.00	686	36.187	919	61	1549	1/2	15	15.75	400
10	250	23	584	11.00	279	12.19	310	25.00	635	47	1194	--	--	19.00	483
12	300	27.25	692	13.13	334	16.75	426	31.00	787	67	1702	--	--	23.00	584

Pipe Size		DIMENSION						WEIGHT	
		J		Flow Coefficients (C_V)	Total Screen Area (in²)	O-Ring Type	Number of Knobs		
in	mm	in	mm					lbs	kgs
1-1/2	40	2.50	64	46	37.78	Buna-N	4	28	12.47
2	50	2.50	64	73	60.78	Buna-N	4	39	17.63
2-1/2	65	2.88	73	125	78.53	Buna-N	4	45	20.30
3	80	3.13	80	180	115.33	Buna-N	4	73	33.11
4	100	3.88	99	350	172.18	Buna-N	4	129	58.48
6	150	5.10	127	900	352.50	Buna-N	6	237	107.50
8	200	8.50	216	1400	1091.48	Buna-N	8	488	221.02
10**	250	--	--	2300	486.30	Buna-N	6	379	171.57
12**	300	--	--	3200	580.27	Buna-N	6	579	262.30

**Mounting Hole Ø is 1" Nominal, 1" Thick.

KECKLEY

Style BGFV

Basket Strainer
Cast Bronze (ASTM B 62, C83600)
150 lb. & 300 lb. Flanged

Cast Bronze Basket Strainer

APPLICATIONS

Steam, water, oil or gas where protection from foreign matter in a pipeline is required.

CONSTRUCTION

The Keckley Style BGFV strainers are constructed from rugged bronze castings that are machined to exacting specifications. These bodies have drilled flanges that are in accordance with ASME B16.24. All flanges come standard with back-faced bolt holes.

FEATURES

The Keckley Style BGFV strainers feature a basket with an angular cutaway design to allow straight through flow and extremely low pressure loss. All sizes have a bolted top cover flange for ease in basket removal. The gasket is spiral wound strainless steel and is compressed between the body and cover (for maximum strength and durability) and designed for high pressure and high temperature service. Keckley Style BGFV strainers have hex head cap screws and are furnished standard with a tapped and plugged NPT drain connection.

BASKETS

Standard baskets are 304 stainless steel and are spot welded for maximum strength. Different size perforations and meshes are available in stainless steel, monel, and brass to meet specific media requirements. If media is not indicated, screens for *water* will be supplied.

CLEANING

Cleaning of the Style BGFV strainer is accomplished by removing the cover and pulling out the basket. **Warning:** See Maintenance Instructions on page S6 of the Strainer Information Section for additional precautions and detailed information on servicing the strainer.

WORKING PRESSURES - NON SHOCK

NOM. RATING	MEDIA	1-1/2" to 12"	40 mm to 300 mm
150# F.F. & D (STANDARD FLANGE)	STEAM	150 PSI @ 406ºF	1035 KPa @ 208ºC
	W.O.G.	225 PSI @ 150ºF	1552 KPa @ 66ºC
NOM. RATING	**MEDIA**	**1-1/2" to 12"**	**40 mm to 300 mm**
300# F.F. & D (EX. HEAVY FLANGE)	STEAM	300 PSI @ 406ºF	2069 KPa @ 208ºC
	W.O.G.	500 PSI @ 150ºF	3449 KPa @ 66ºC

KECKLEY

TECHNICAL DATA
DIMENSIONS AND WEIGHTS

Style BGFV

Basket Strainer, 150 lb. & 300 lb. Flanged Cast Bronze (ASTM B 62, C83600)

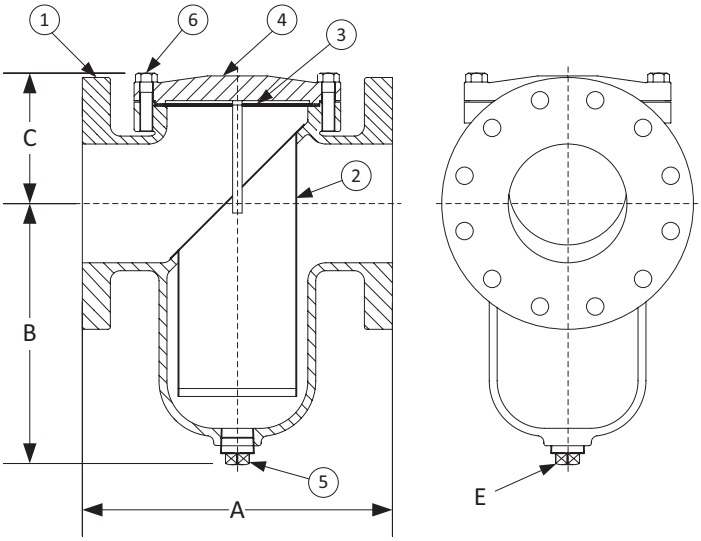

PARTS LIST		
ITEM	DESCRIPTION	MATERIAL
1	Body	Cast Bronze (ASTM B 62, C83600)
2	Basket	Stainless Steel (304)
3	Gasket	Spiral Wound Stainless Steel (304)
4	Cover	Cast Bronze (ASTM B 62, C83600)
5	Pipe Plug	Stainless Steel (316)
6	Hex Head Cap Screws	Stainless Steel (316)

STANDARD SCREENS SUPPLIED

SIZE		SCREEN GAGE	SCREEN PERFORATION					
			FOR STEAM		OPEN AREA	FOR LIQ-UID		OPEN AREA
in	mm		in	mm		in	mm	
1-1/2 to 3	40 to 80	22	3/64	1.2	33%	1/16	1.6	30%

Standard screens supplied are for **liquid service**, unless otherwise specified.
Options: Other meshes, perforations, and screen materials are available.

SIZE		DIMENSIONS															
		A				B				C				E			
		150#		300#		150#		300#		150#		300#		150#		300#	
in	mm	in	mm	in	mm	in	mm	in	mm	in	mm	in	mm	in	mm	in	mm
1-1/2	40	6-1/2	165	7	178	1-1/2	38	4	102	4	102	3-3/4	95	1/2	15	1/2	15
2	50	8-1/2	216	8-13/16	224	5-7/8	149	4-3/4	121	4-3/4	121	3-3/4	95	1/2	15	1	25
2-1/2	65	8	203	9	229	5-7/16	138	5-5/8	143	4-1/4	108	4-5/8	117	3/4	20	1	25
3	80	8-3/4	222	10-1/16	256	5-11/16	144	5-11/16	144	5-5/8	143	5-5/8	143	3/4	20	3/4	20
4	100	11-3/16	284	12	305	8-1/4	210	8-1/4	210	6-1/16	154	6-1/16	154	1	25	1	25
5	125	12-1/4	311	13-1/8	333	10-1/4	260	10-1/4	260	5-5/8	143	5-5/8	143	1	25	1	25
6	150	13-7/8	352	15-9/16	395	12-13/64	310	12-13/64	310	6-5/16	149	6-5/16	160	1-1/4	32	1-1/4	32
8	200	17-3/8	441	18-7/8	479	15-9/16	395	15-9/16	395	8-3/16	208	8-3/16	208	1-1/2	40	1-1/4	40
10	250	22	559	21-5/16	541	16	406	14-3/8	365	10-3/8	264	9-7/8	251	1-1/2	40	2	50
12	300	25	635	25-3/8	645	23-3/4	603	23-3/4	603	12-3/8	314	12-3/8	314	2	50	2	50

Consult factory for sizes not shown.
Certified dimensional drawings are available upon request.
†This table reflects only the nearest metric equivalents.

WEIGHTS

Size			2”		3”	4”	5”	6”	8”	10”	12”
150	lbs	22	31	34	42	68	115	115	245	399	450
	kgs	10	14	15	19	31	52	52	111	181	204
300	lbs	24	32	42	56	88	126	150	295	420	500
	kgs	11	15	19	25	40	57	68	134	191	227

FLOW COEFFICIENTS

Size	C_V	Size	C_V	Size	C_V	Size	C_V
1-1/2”	32	3”	120.2	6”	743.1	12”	4980.6
2”	42.7	4”	276.7	8”	1486.3		
2-1/2”	84	5”	442.7	10”	3051.6		

TOTAL SCREEN AREA

Size	(in²)	Size	(in²)	Size	(in²)	Size	(in²)
1-1/2”	20.10	3”	54.53	6”	215.65	12”	1141.87
2”	53.42	4”	117.94	8”	401.76		
2-1/2”	45.72	5”	129.00	10”	591.73		

*See DETERMINING RATIOS on page S5 of the Strainer Information Section for calculating NET FREE AREA of the screen to inside pipe area.

PRESSURE vs. TEMPERATURE CHART

150# & 300# Flanged Cast Bronze (ASTM B 62, C83600)

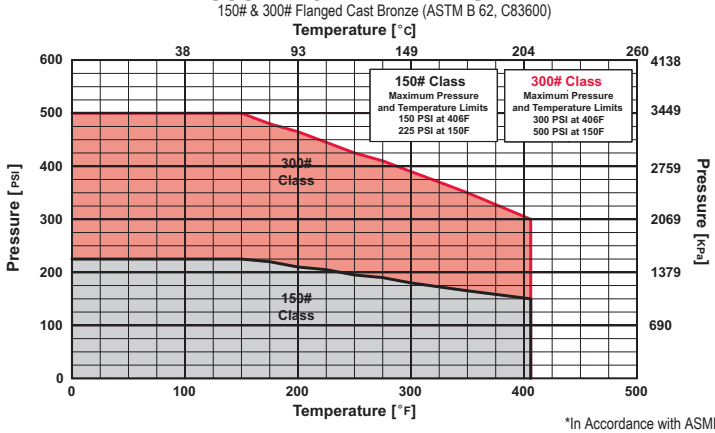

*In Accordance with ASME B16.24

KECKLEY

Style BD & BDV

Basket Strainer
Cast Bronze (ASTM B 62, C83600)
150 lb. & 300 lb. Flanged

Cast Bronze Basket Strainer

APPLICATIONS

Steam, water, oil or gas where protection from foreign matter in a pipeline is required.

CONSTRUCTION

The Keckley Style BD & BDV strainers are constructed from rugged cast bronze castings that are machined to exacting specifications. These bodies have drilled flanges that are in accordance with ASME B16.24.

FEATURES

The Keckley Style BD & BDV strainers feature a machined basket seat to minimize particle bypass. All sizes have a bolted top cover flange for ease in basket removal. The gasket is a synthetic fiber gasket is compressed between the body and cover for maximum strength and durability. All Keckley Style BD & BDV strainers are furnished standard with a tapped and plugged NPT drain connection.

BASKETS

Standard baskets are 304 stainless steel and are spot welded for maximum strength. Different size perforations and meshes are available in stainless steel, monel, and brass to meet specific media requirements. If media is not indicated, screens for *water* will be supplied.

CLEANING

Cleaning of the Style BD strainer is accomplished by removing the cover and pulling out the basket. The Style BDV basket has an open bottom and is cleaned by blowing trapped material out through the blow-off connection similar to a "Y" type strainer. **Warning:** See Maintenance Instructions on page S6 of the Strainer Information Section for additional precautions and detailed information on servicing the strainer.

WORKING PRESSURES - NON SHOCK

NOM. RATING	MEDIA	2" to 12"	50 mm to 300 mm
150# F.F. & D (STANDARD FLANGE)	STEAM	150 PSI @ 406ºF	1035 KPa @ 208ºC
	W.O.G.	225 PSI @ 150ºF	1552 KPa @ 66ºC
NOM. RATING	**MEDIA**	**2" to 12"**	**50 mm to 300 mm**
300# F.F. & D (EX. HEAVY FLANGE)	STEAM	300 PSI @ 406ºF	2069 KPa @ 208ºC
	W.O.G.	500 PSI @ 150ºF	3449 KPa @ 66ºC

KECKLEY

TECHNICAL DATA
DIMENSIONS AND WEIGHTS

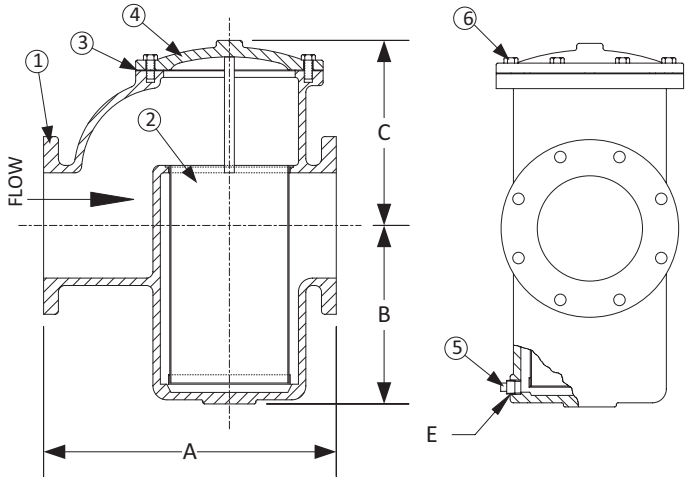

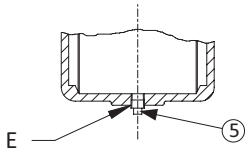

Style BDV has a bottom blow off with an open bottom basket.

Style BD & BDV

Basket Strainer, 150 lb. & 300 lb. Flanged Cast Bronze (ASTM B 62, C83600)

PARTS LIST		
ITEM	DESCRIPTION	MATERIAL
1	Body	Cast Bronze (ASTM B 62, C83600)
2	Basket	Stainless Steel (304)
3	Gasket	Composition
4	Cover	Cast Bronze (ASTM B 62, C83600)
5	Pipe Plug	Brass
6	Hex Head Cap Screws	Steel

STANDARD SCREENS SUPPLIED

SIZE		SCREEN GAGE	SCREEN PERFORATION					
			FOR STEAM		OPEN AREA	FOR LIQ-UID		OPEN AREA
in	mm		in	mm		in	mm	
2 to 5	50 to 125	28	1/16	1.6	30%	1/8	3.2	43%
6 to 8	150 to 200	24	1/8	3.2	43%	1/8	3.2	43%

Standard screens supplied are for **liquid service**, unless otherwise specified.
Options: Other meshes, perforations, and screen materials are available.

SIZE		DIMENSIONS										WEIGHTS			
		A				B		C		E					
		150#		300#		150# & 300#		150# & 300#		150# & 300#		150#		300#	
in	mm	in	mm	in	mm	in	mm	in	mm	in	mm	lbs	kgs	lbs	kgs
2	50	7-3/4	197	8-1/4	210	3-15/16	100	5-1/4	133	1/2	15	27	12	33	15
2-1/2	65	8-3/4	222	9-1/4	235	4	102	6	152	1/2	15	38	17	47	21
3	80	9-3/4	248	10-5/16	262	5	127	7	178	1/2	15	52	24	63	29
4	100	12-3/4	324	13-1/2	343	6-3/4	171	9-1/2	241	1/2	15	135	61	142	64
5	125	16-1/2	419	17-1/4	438	9-7/8	251	12	305	3/4	20	193	88	228	103
6	150	16-5/8	422	17-3/8	441	9-7/8	251	12	305	3/4	20	201	91	243	110
8	200	21-5/8	549	22-1/2	572	13-3/4	349	14	356	3/4	20	397	180	472	214
10	250	25-5/8	651	29-3/4	756	17	432	18	457	3/4	20	791	359	860	390
12	300	29-5/8	752	31-5/8	803	20-5/8	524	21	533	2	50	1305	592	1478	670

Certified dimensional drawings are available upon request.
†This table reflects only the nearest metric equivalents.

FLOW COEFFICIENTS

Size	C_V	Size	C_V	Size	C_V
2"	55.7	4"	208.7	8"	784.3
2-1/2"	88.5	5"	354.2	10"	1208.0
3"	123.3	6"	430.1	12"	1868.9

TOTAL SCREEN AREA

Size	(in^2)	Size	(in^2)	Size	(in^2)
2"	39.45	4"	152.58	8"	529.98
2-1/2"	51.66	5"	295.54	10"	808.58
3"	84.84	6"	295.54	12"	1252.0

*See DETERMINING RATIOS on page S5 of the Strainer Information Section for calculating NET FREE AREA of the screen to inside pipe area.

PRESSURE vs. TEMPERATURE CHART

150# & 300# Flanged Cast Bronze (ASTM B 62, C83600)

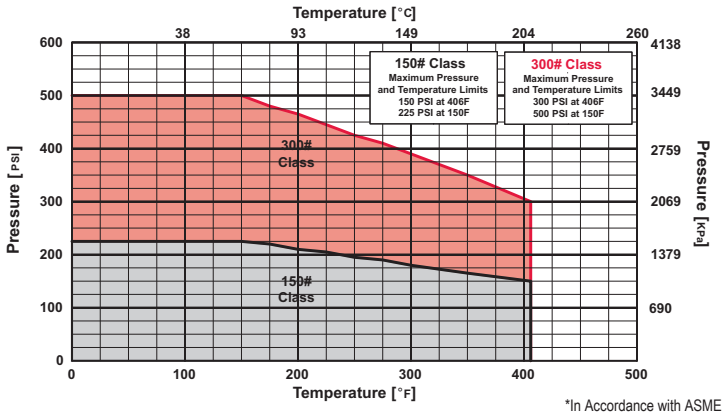

*In Accordance with ASME B16.24

KECKLEY

Style BKF-7

Basket Strainer
Nickel Aluminum Bronze
(ASTM B 148, C95800)
150 lb. Flanged

Sizes 1½" to 8"

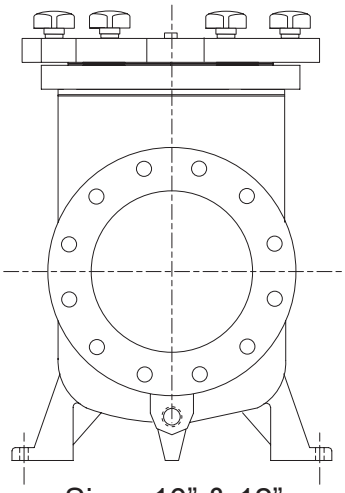

Sizes 10" & 12"

Cast Nickel Aluminum Bronze Basket Strainer

APPLICATIONS

Water, oil or gas where protection from foreign matter in a pipeline is required.

CONSTRUCTION

The Keckley Style BKF-7 strainers are constructed from rugged cast nickel aluminum bronze castings and are machined to exacting specifications. These bodies have drilled flanges that are in accordance with ASME B16.24.

FEATURES

The Keckley Style BKF-7 strainers feature a machined basket seat to minimize particle bypass. All sizes have knob type fasteners securing the cover flange for tool free ease in basket removal. The Keckley Style BKF-7 features a Buna-N o-ring that is compressed between the body and cover for maximum strength and durability and is limited to 150°F. All Keckley Style BKF-7 strainers are furnished standard with a tapped and plugged NPT connection.

BASKETS

Standard baskets are 304 stainless steel and are spot welded for maximum strength. Different size perforations and meshes are available in stainless steel, monel, and brass to meet specific media requirements.

CLEANING

Cleaning of the Style BKF-7 strainer is accomplished by removing the cover and pulling out the basket. **Warning:** See Maintenance Instructions on page S6 of the Strainer Information Section for additional precautions and detailed information on servicing the strainer.

WORKING PRESSURES - NON SHOCK

NOM. RATING	MEDIA	1-1/2" to 12"	40 mm to 300 mm
150# F.F. & D. (STANDARD FLANGE)	W.O.G.	200 PSI @ 100ºF	1379 KPa @ 38ºC

KECKLEY

TECHNICAL DATA
DIMENSIONS AND WEIGHTS

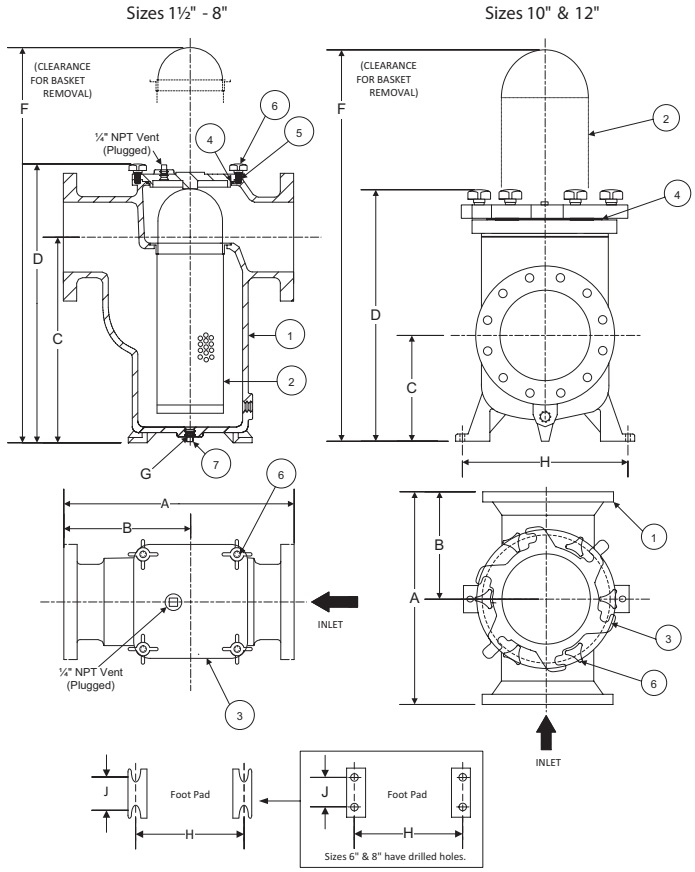

Style BKF-7

Basket Strainer, 150 lb. Flanged
Nickel Aluminum Bronze (ASTM B 148, C95800)

PARTS LIST		
ITEM	DESCRIPTION	MATERIAL
1	Body	Nickel Aluminum Bronze (ASTM B 148, C95800)
2*	Basket	Stainless Steel (304)
3†	Cover	Nickel Aluminum Bronze (ASTM B 148, C95800)
4	O-ring	Buna-N (Max Temperature 150°F)
5	Stud	Carbon Steel (ASTM A 193, Grade B7)
6	Knob	Stainless Steel
7	Body Plug	Brass

*Denotes Spare Parts.
†Sizes 6" and larger are furnished with round covers.

STANDARD SCREENS SUPPLIED

SIZE		SCREEN GAGE	SCREEN PERFORATION FOR LIQUID		OPEN AREA
in	mm		in	mm	
1-1/2 to 12	40 to 300	28 - 24	1/8	3.2	43%

Options: Other meshes, perforations, and screen materials are available.

Pipe Size		DIMENSION													
		A		B		C		D		F		G		H	
in	mm	in	mm	in	mm	in	mm	in	mm	in	mm	in	mm	in	mm
1-1/2	40	10.25	260	5.63	143	7.00	178	11.00	279	16	406	1/4	8	5.5	140
2	50	10.50	267	5.75	146	6.63	168	10.25	260	20	508	1/2	15	5.5	140
2-1/2	65	11.63	295	6.63	168	7.88	200	11.88	302	23	584	3/8	10	6.5	165
3	80	13.13	334	7.25	184	9.25	235	13.75	349	27	686	3/8	10	7.0	178
4	100	16.75	426	9.38	238	9.00	229	14.75	375	29	737	1/2	15	10.00	254
6	150	19.63	499	10.81	275	15.75	400	24.00	610	46	1168	1/2	15	10.00	254
8	200	27	686	16.00	406	27.00	686	36.187	919	61	1549	1/2	15	15.75	400
10	250	23	584	11.00	279	12.19	310	25.00	635	47	1194	--	--	19.00	483
12	300	27.25	692	13.13	334	16.75	426	31.00	787	67	1702	--	--	23.00	584

Pipe Size		DIMENSION						WEIGHT	
		J		Flow Coefficients (C_V)	Total Screen Area (in²)	O-Ring Type	Number of Knobs		
in	mm	in	mm					lbs	kgs
1-1/2	40	2.50	64	46	37.78	Buna-N	4	28	12.47
2	50	2.50	64	73	60.78	Buna-N	4	39	17.63
2-1/2	65	2.88	73	125	78.53	Buna-N	4	45	20.30
3	80	3.13	80	180	115.33	Buna-N	4	73	33.11
4	100	3.88	99	350	172.18	Buna-N	4	129	58.48
6	150	5.10	127	900	352.50	Buna-N	6	237	107.50
8	200	8.50	216	1400	1091.48	Buna-N	8	488	221.02
10**	250	--	--	2300	486.30	Buna-N	6	379	171.57
12**	300	--	--	3200	580.27	Buna-N	6	579	262.30

**Mounting Hole Ø is 1" Nominal, 1" Thick.

KECKLEY

Cast Carbon Steel Basket Strainer

Style SD

Basket Strainer
Carbon Steel (ASTM A 216, Grade WCB)
300 lb. Threaded

Style SD-K

Basket Strainer
Carbon Steel (ASTM A 216, Grade WCB)
150 lb. Threaded

APPLICATIONS

Steam, water, oil or gas where protection from foreign matter in a pipeline is required.

CONSTRUCTION

The Keckley Style SD and SD-K strainers are constructed from rugged carbon steel castings that are machined to exacting specifications.

FEATURES

The Keckley Style SD and SD-K strainers feature a machined basket seat to minimize particle bypass. The Style SD has a spiral wound 304 stainless steel gasket and is compressed between the body and cover (for maximum strength and durability) and designed for high pressure and high temperature service. The Style SD-K is furnished with a Buna-N o-ring and is limited to 150°F. Keckley threaded Style SD strainers have carbon steel hex head cap screws. All units are furnished standard with a tapped and plugged NPT drain connection.

BASKETS

Standard baskets are 304 stainless steel and are spot welded for maximum strength. Different size perforations and meshes are available in stainless steel, monel, and brass to meet specific media requirements. If media is not indicated, screens for *water* will be supplied.

CLEANING

Cleaning of the Style SD and SD-K strainers are accomplished by removing the cover and pulling out the basket. **Warning:** See Maintenance Instructions on page S6 of the Strainer Information Section for additional precautions and detailed information on servicing the strainer.

WORKING PRESSURES - NON SHOCK

NOM. RATING		MEDIA	3/8" to 3"	10 mm to 80 mm
300# (THREADED)	BOLTED COVER	STEAM	300 PSI @ 838ºF	2069 KPa @ 448ºC
		W.O.G.	740 PSI @ 100ºF	5104 KPa @ 66ºC
NOM. RATING		**MEDIA**	**3/8" to 3"**	**10 mm to 80 mm**
150# (THREADED)	KNOB TYPE COVER	W.O.G.	200 PSI @ 150ºF	1379 KPa @ 66ºC

KECKLEY

TECHNICAL DATA
DIMENSIONS AND WEIGHTS

Style SD & SD-K

Basket Strainer, Threaded
Carbon Steel (ASTM A 216, Grade WCB)

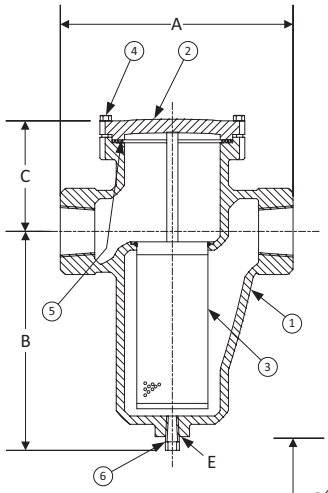

Style SD Bolted Cover
(Shown Above)
300 lb. Class

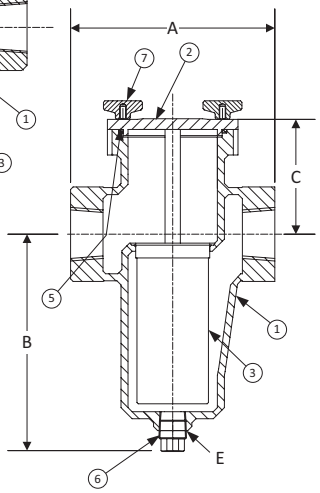

Style SD-K Knob Type Cover
(Shown Above)
Only Available in 150 lb. Class

PARTS LIST		
ITEM	DESCRIPTION	MATERIAL
1†	Body	Carbon Steel (ASTM A 216, Grade WCB)
2	Cover	Carbon Steel (ASTM A 216, Grade WCB)
3	Basket	Stainless Steel (304)
4	Hex Head Cap Screw	Carbon Steel (ASTM A 193, Grade B7)
5	Gasket	Spiral Wound Stainless Steel (304)
6	Plug	Carbon Steel (ASTM A 105)
7*	Knob	Carbon Steel (ASTM A 216, Grade WCB)
8*	O-ring	Buna-N (Max Temperature 150°F)

*Denotes parts for the Style SD-K 150 lb. class only.
†Optional Body Materials Available in LCB, WC6, and WC9.

STANDARD SCREENS SUPPLIED

SIZE		SCREEN GAGE	SCREEN PERFORATION					
			FOR STEAM		OPEN AREA	FOR LIQ-UID		OPEN AREA
in	mm		in	mm		in	mm	
3/8 to 2	10 to 50	28	1/32	0.8	29%	1/16	1.6	30%

Standard screens supplied are for **liquid service**, unless otherwise specified.
Options: Other meshes, perforations, and screen materials are available.

SIZE		DIMENSIONS								WEIGHTS	
		A		B		C		E			
in	mm	in	mm	in	mm	in	mm	in	mm	lbs	kgs
3/8	10	4-9/16	116	4	102	3-1/8	79	3/8	10	7	2.78
1/2	15	4-9/16	116	4	102	3-1/8	79	3/8	10	7	2.78
3/4	20	4-9/16	116	4	102	3-1/8	79	3/8	10	7	2.78
1	25	5-5/16	135	4-7/8	124	3	76	3/8	10	8	3.58
1-1/4	32	6-5/16	160	6-1/2	165	4-1/8	105	1/2	15	14	6.30
1-1/2	40	6-5/16	160	6-1/2	165	4-1/8	105	1/2	15	14	6.30
2	50	8-1/4	210	7-7/8	200	4-3/4	121	3/4	20	25	11.30
2-1/2	65	9-5/8	245	8-3/4	222	4	102	1	25	48	21.75
3	80	11-1/4	286	11-3/8	289	5-7/8	149	1	25	48	21.75

Certified dimensional drawings are available upon request.
†This table reflects only the nearest metric equivalents.

FLOW COEFFICIENTS

Size	C_V	Size	C_V	Size	C_V
3/8"	19.9	1"	19.9	2"	55.7
1/2"	19.9	1-1/4"	35.4	2-1/2"	88.5
3/4"	19.9	1-1/2"	35.4	3"	123.3

TOTAL SCREEN AREA

Size	(in²)	Size	(in²)	Size	(in²)
3/8"	11.72	1"	19.17	2"	64.36
1/2"	11.72	1-1/4"	41.65	2-1/2"	67.60
3/4"	11.72	1-1/2"	41.65	3"	128.17

*See DETERMINING RATIOS on page S5 of the Strainer Information Section for calculating NET FREE AREA of the screen to inside pipe area.

PRESSURE vs. TEMPERATURE CHART

300# Threaded Carbon Steel (ASTM A 216, Grade WCB)
For use with Bolted Cover Only

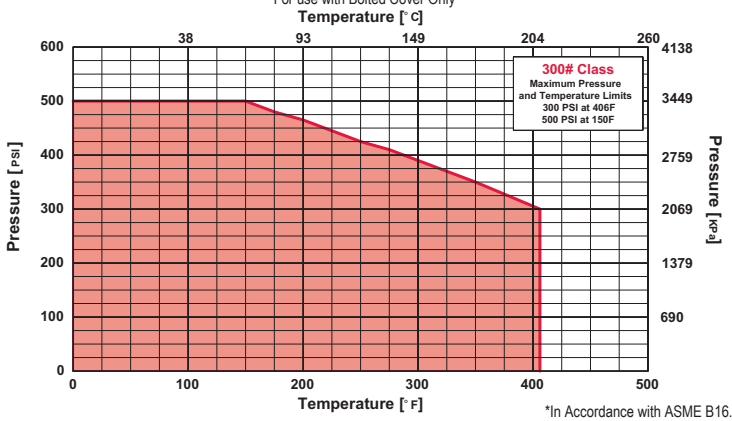

*In Accordance with ASME B16.34

KECKLEY

Style SGFV

Basket Strainer
Carbon Steel (ASTM A 216, Grade WCB)
150 lb. & 300 lb. Flanged

Style SGFV-K

Basket Strainer
Carbon Steel (ASTM A 216, Grade WCB)
150 lb. Flanged

Cast Carbon Steel Basket Strainer

APPLICATIONS

Steam, water, oil or gas where protection from foreign matter in a pipeline is required.

CONSTRUCTION

The Keckley Style SGFV and SGFV-K strainers are constructed from rugged carbon steel castings and are machined to exacting specifications. These bodies have raised faced and drilled flanges that are in accordance with ASME B16.5. All flanges come standard with back-faced bolt holes.

FEATURES

The Keckley Style SGFV and SGFV-K strainers feature a basket with an angular cutaway design to allow straight through flow and extremely low pressure loss. The Style SGFV has a bolted top cover flange for ease in basket removal. The Style SGFV-K is furnished with studs and knobs for easy cleaning. The Style SGFV gasket is spiral wound 304 stainless steel and is compressed between the body and cover (for maximum strength and durability) and designed for high pressure and high temperature service. The Style SGFV-K is furnished with a Buna-N gasket suitable for temperatures up to 200°F. Keckley Style SGFV strainers have carbon steel hex head cap crews and are furnished standard with a tapped and plugged NPT drain connection.

BASKETS

Standard baskets are 304 stainless steel and are spot welded for maximum strength. Different size perforations and meshes are available in stainless steel, monel, and brass to meet specific media requirements. If media is not indicated, screens for *water* will be supplied.

CLEANING

Cleaning of the Style SGFV and SGFV-K strainers are accomplished by removing the cover and pulling out the basket. **Warning:** See Maintenance Instructions on page S6 of the Strainer Information Section for additional precautions and detailed information on servicing the strainer.

WORKING PRESSURES - NON SHOCK

NOM. RATING		MEDIA	2" to 12"	50 mm to 300 mm
150# R.F. & D. (STANDARD FLANGE)	BOLTED COVER	STEAM	150 PSI @ 838ºF	1035 KPa @ 296ºC
		W.O.G.	285 PSI @ 100ºF	1966 KPa @ 38ºC
	KNOB TYPE COVER	W.O.G.	200 PSI @ 200ºF	1379 KPa @ 93ºC
NOM. RATING		**MEDIA**	**2" to 12"**	**50 mm to 300 mm**
300# R.F. & D. (EX. HEAVY FLANGE)	BOLTED COVER	STEAM	300 PSI @ 838ºF	2069 KPa @ 448ºC
		W.O.G.	740 PSI @ 100ºF	5104 KPa @ 38ºC

KECKLEY

TECHNICAL DATA
DIMENSIONS AND WEIGHTS

Style SGFV & SGFV-K

Basket Strainer, Flanged
Carbon Steel (ASTM A 216, Grade WCB)

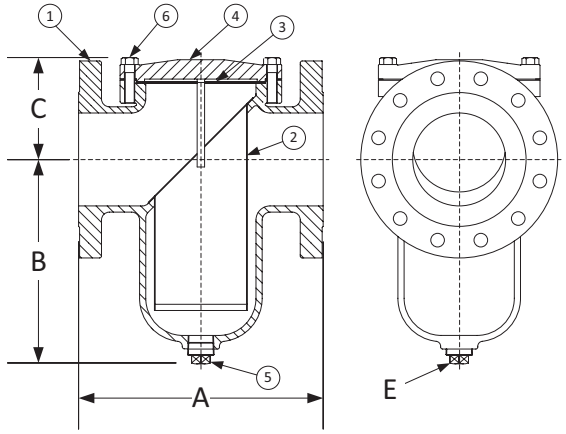

Style SGFV Bolted Cover (Shown Above)
Available in 150 lb. and 300 lb. Class

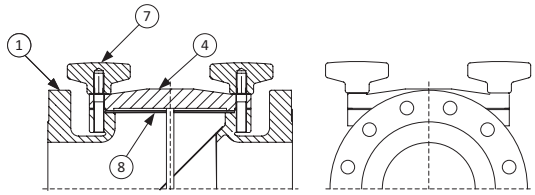

Style SGFV-K Knob Type Cover (Shown Above)
Only Available in 150 lb. Class

PARTS LIST		
ITEM	DESCRIPTION	MATERIAL
1†	Body	Carbon Steel (ASTM A 216, Grade WCB)
2	Basket	Stainless Steel (304)
3	Gasket	Spiral Wound Stainless Steel (304)
4	Cover	Carbon Steel (ASTM A 216, Grade WCB)
5	Pipe Plug	Carbon Steel (ASTM A 105)
6	Hex Head Cap Screw	Carbon Steel (ASTM A 193, Grade B7)
7*	Knob	Steel
8*	Gasket	Buna-N (Max Temperature 200°F)

*Denotes parts for the Style SGFV-K 150 lb. class only.
†Optional Body Materials Available in LCB, WC6, and WC9.

STANDARD SCREENS SUPPLIED

SIZE		SCREEN GAGE	SCREEN PERFORATION					
			FOR STEAM		OPEN AREA	FOR LIQ-UID		OPEN AREA
in	mm		in	mm		in	mm	
1-1/2 to 3	40 to 80	22	3/64	1.2	33%	1/16	1.6	30%

Standard screens supplied are for **liquid service**, unless otherwise specified.
Options: Other meshes, perforations, and screen materials are available.

SIZE		DIMENSIONS															
		A				B				C				E			
		150#		300#		150#		300#		150#		300#		150#		300#	
in	mm	in	mm	in	mm	in	mm	in	mm	in	mm	in	mm	in	mm	in	mm
1-1/2	40	6-1/2	165	7	178	4-1/2	114	4	102	4	102	3-3/4	95	1/2	15	1/2	15
2	50	8-1/2	216	8-13/16	224	5-7/8	149	4-3/4	121	4-3/4	121	3-3/4	95	1/2	15	1	25
2-1/2	65	8	203	9	229	5-7/16	138	5-5/8	143	4-1/4	108	4-5/8	117	3/4	20	1	25
3	80	8-3/4	222	10-1/16	256	5-11/16	144	5-11/16	144	5-5/8	143	5-5/8	143	3/4	20	3/4	20
4	100	11-3/16	284	12	305	8-1/4	210	8-1/4	210	6-1/16	154	6-1/16	154	1	25	1	25
5	125	12-1/4	311	13-1/8	333	10-1/4	260	10-1/4	260	5-5/8	143	5-5/8	143	1	25	1	25
6	150	13-7/8	352	15-9/16	395	12-13/64	310	12-13/64	310	6-5/16	149	6-5/16	160	1-1/4	32	1-1/4	32
8	200	17-3/8	441	18-7/8	479	15-9/16	395	15-9/16	395	8-3/16	208	8-3/16	208	1-1/2	40	1-1/4	40
10	250	22	559	21-5/16	541	16	406	14-3/8	365	10-3/8	264	9-7/8	251	1-1/2	40	2	50
12	300	25	635	25-3/8	645	23-3/4	603	23-3/4	603	12-3/8	314	12-3/8	314	2	50	2	50
14	350	34-5/16	871	34-5/16	871	28	711	34-3/8	873	16-1/2	419	20-3/16	513	2	50	2	50

Certified dimensional drawings are available upon request.
†This table reflects only the nearest metric equivalents.

WEIGHTS												
Size			2"		3"	4"	5"	6"	8"	10"	12"	14"
150	lbs	21	26	29	39	69	79	116	194	324	717	1275
	kgs	10	12	13	18	31	36	53	88	147	325	578
300	lbs	23	32	40	54	99	195	195	333	530	903	1424
	kgs	10	15	18	24	45	88	88	151	240	410	646

FLOW COEFFICIENTS

Size	C_V	Size	C_V	Size	C_V	Size	C_V
1-1/2"	32	3"	120.2	6"	743.1	12"	4980.6
2"	42.7	4"	276.7	8"	1486.3	14"	7600.0
2-1/2"	84	5"	442.7	10"	3051.6		

TOTAL SCREEN AREA (150 LB.)

Size	(in^2)	Size	(in^2)	Size	(in^2)	Size	(in^2)
1-1/2"	20.10	3"	54.53	6"	215.65	12"	1141.87
2"	53.42	4"	117.94	8"	401.76	14"	1200.00
2-1/2"	45.72	5"	129.00	10"	591.73		

*See DETERMINING RATIOS on page S5 of the Strainer Information Section for calculating NET FREE AREA of the screen to inside pipe area.

PRESSURE vs. TEMPERATURE CHART

150# & 300# Flanged Carbon Steel (ASTM A 216, Grade WCB)
For use with Bolted Cover Only

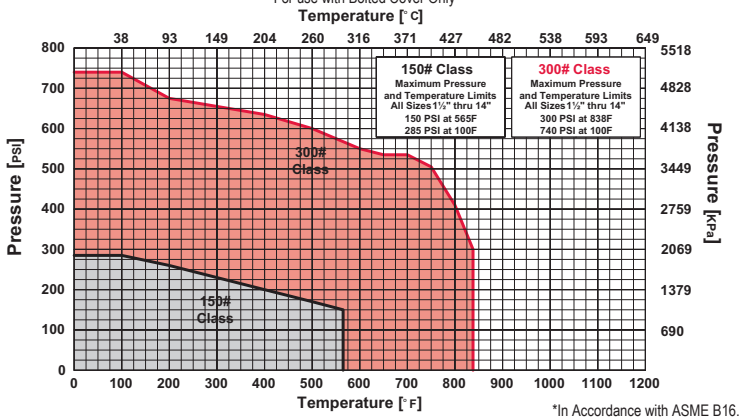

*In Accordance with ASME B16.5

KECKLEY

Style SSD

Basket Strainer
Stainless Steel (ASTM A 351, Grade CF8M)
300 lb. Threaded

Style SSD-K

Basket Strainer
Stainless Steel (ASTM A 351, Grade CF8M)
150 lb. Threaded

Cast 316 Stainless Steel Basket Strainer

APPLICATIONS

Steam, water, oil or gas where protection from foreign matter in a pipeline is required.

CONSTRUCTION

The Keckley Style SSD and SSD-K strainers are constructed from rugged 316 stainless steel castings that are machined to exacting specifications.

FEATURES

The Keckley Style SSD and SSD-K strainers feature a machined basket seat to minimize particle bypass. The Style SSD has a spiral wound 304 stainless steel gasket and is compressed between the body and cover (for maximum strength and durability) and designed for high pressure and high temperature service. The Style SSD-K is furnished with a viton o-ring and is limited to 350°F. Keckley threaded Style SSD strainers have carbon steel hex head cap screws. All units are furnished standard with a tapped and plugged NPT drain connection.

BASKETS

Standard baskets are 304 stainless steel and are spot welded for maximum strength. Different size perforations and meshes are available in stainless steel, monel, and brass to meet specific media requirements. If media is not indicated, screens for *water* will be supplied.

CLEANING

Cleaning of the Style SSD and SSD-K strainers are accomplished by removing the cover and pulling out the basket. **Warning:** See Maintenance Instructions on page S6 of the Strainer Information Section for additional precautions and detailed information on servicing the strainer.

WORKING PRESSURES - NON SHOCK

NOM. RATING		MEDIA	3/8" to 3"	10 mm to 80 mm
300# (THREADED)	BOLTED COVER	STEAM	300 PSI @ 1125ºF	2069 KPa @ 607ºC
		W.O.G.	720 PSI @ 100ºF	4966 KPa @ 38ºC
NOM. RATING		**MEDIA**	**3/8" to 3"**	**10 mm to 80 mm**
150# (THREADED)	KNOB TYPE COVER	W.O.G.	200 PSI @ 350ºF	1379 KPa @ 177ºC

KECKLEY

TECHNICAL DATA
DIMENSIONS AND WEIGHTS

Style SSD & SSD-K

Basket Strainer, Threaded
Stainless Steel (ASTM A 351, Grade CF8M)

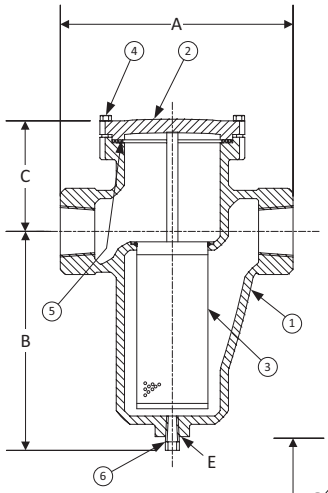

Style SSD Bolted Cover
(Shown Above)
300 lb. Class

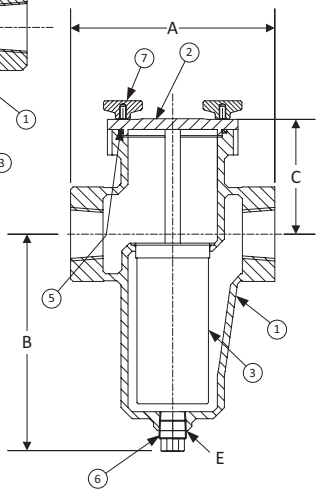

Style SSD-K Knob Type Cover
(Shown Above)
Only Available in 150 lb. Class

PARTS LIST		
ITEM	DESCRIPTION	MATERIAL
1†	Body	Stainless Steel (ASTM A 351, Grade CF8M)
2	Cover	Stainless Steel (ASTM A 351, Grade CF8M)
3	Basket	Stainless Steel (304)
4	Hex Head Cap Screw	Stainless Steel
5	Gasket	Spiral Wound Stainless Steel (304)
6	Plug	Stainless Steel (316)
7*	Knob	Stainless Steel (ASTM A 351, Grade CF8M)
8*	O-ring	Viton (Max Temperature 350°F)

*Denotes parts for the Style SSD-K 150 lb. class only.
†Optional Body Materials Available in 304 and 400 Series SS, Alloy 20, Hastelloy, Inconel, Monel and Stellite.

STANDARD SCREENS SUPPLIED

SIZE		SCREEN GAGE	SCREEN PERFORATION					
			FOR STEAM		OPEN AREA	FOR LIQUID		OPEN AREA
in	mm		in	mm		in	mm	
3/8 to 2	10 to 50	28	1/32	0.8	29%	1/16	1.6	30%

Standard screens supplied are for **liquid service**, unless otherwise specified.
Options: Other meshes, perforations, and screen materials are available.

SIZE		DIMENSIONS								WEIGHTS	
		A		B		C		E			
in	mm	in	mm	in	mm	in	mm	in	mm	lbs	kgs
3/8	10	4-9/16	116	4	102	3-1/8	79	3/8	10	7	2.78
1/2	15	4-9/16	116	4	102	3-1/8	79	3/8	10	7	2.78
3/4	20	4-9/16	116	4	102	3-1/8	79	3/8	10	7	2.78
1	25	5-5/16	135	4-7/8	124	3	76	3/8	10	8	3.58
1-1/4	32	6-5/16	160	6-1/2	165	4-1/8	105	1/2	15	14	6.30
1-1/2	40	6-5/16	160	6-1/2	165	4-1/8	105	1/2	15	14	6.30
2	50	8-1/4	210	7-7/8	200	4-3/4	121	3/4	20	25	11.30
2-1/2	65	9-5/8	245	8-3/4	222	4	102	1	25	48	21.75
3	80	11-1/4	286	11-3/8	289	5-7/8	149	1	25	48	21.75

Certified dimensional drawings are available upon request.
†This table reflects only the nearest metric equivalents.

FLOW COEFFICIENTS

Size	C_V	Size	C_V	Size	C_V
3/8"	19.9	1"	19.9	2"	55.7
1/2"	19.9	1-1/4"	35.4	2-1/2"	88.5
3/4"	19.9	1-1/2"	35.4	3"	123.3

TOTAL SCREEN AREA

Size	(in^2)	Size	(in^2)	Size	(in^2)
3/8"	11.72	1"	19.17	2"	64.36
1/2"	11.72	1-1/4"	41.65	2-1/2"	67.60
3/4"	11.72	1-1/2"	41.65	3"	128.17

*See DETERMINING RATIOS on page S5 of the Strainer Information Section for calculating NET FREE AREA of the screen to inside pipe area.

PRESSURE vs. TEMPERATURE CHART

300#Threaded Stainless Steel (ASTM A 351, Grade CF8M)
For use with Bolted Cover Only

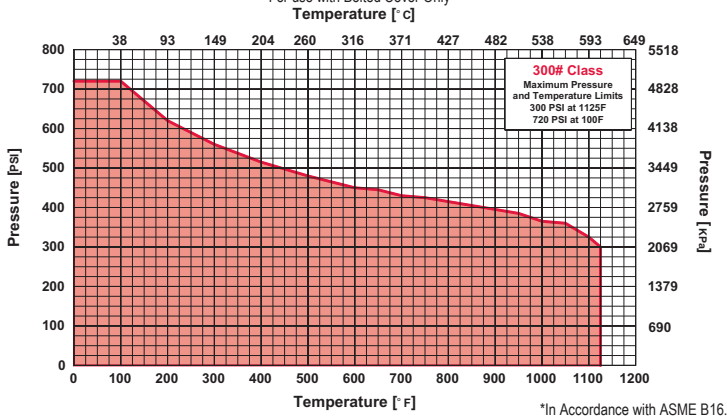

*In Accordance with ASME B16.34

KECKLEY

Style SSGFV

Basket Strainer
Stainless Steel (ASTM A 351, Grade CF8M)
150 lb. & 300 lb. Flanged

Style SSGFV-K

Basket Strainer
Stainless Steel (ASTM A 351, Grade CF8M)
150 lb. Flanged

Cast 316 Stainless Steel Basket Strainer

APPLICATIONS

Steam, water, oil or gas where protection from foreign matter in a pipeline is required.

CONSTRUCTION

The Keckley Style SSGFV and SSGFV-K strainers are constructed from rugged 316 stainless steel castings and are machined to exacting specifications. These bodies have raised faced and drilled flanges that are in accordance with ASME B16.5. All flanges come standard with back-faced bolt holes.

FEATURES

The Keckley Style SSGFV and SSGFV-K strainers feature a basket with an angular cutaway design to allow straight through flow and extremely low pressure loss. The Style SSGFV has a bolted top cover flange for ease in basket removal. The Style SSGFV-K is furnished with studs and knobs for easy cleaning. The Style SSGFV gasket is spiral wound 304 stainless steel and is compressed between the body and cover (for maximum strength and durability) and designed for high pressure and high temperature service. The Style SSGFV-K is furnished with a viton gasket suitable for temperatures up to 400°F. Keckley Style SSGFV strainers have carbon steel hex head cap crews and are furnished standard with a tapped and plugged NPT drain connection.

BASKETS

Standard baskets are 304 stainless steel and are spot welded for maximum strength. Different size perforations and meshes are available in stainless steel, monel, and brass to meet specific media requirements. If media is not indicated, screens for *water* will be supplied.

CLEANING

Cleaning of the Style SSGFV and SSGFV-K strainers are accomplished by removing the cover and pulling out the basket. **Warning:** See Maintenance Instructions on page S6 of the Strainer Information Section for additional precautions and detailed information on servicing the strainer.

WORKING PRESSURES - NON SHOCK

NOM. RATING		MEDIA	2" to 12"	50 mm to 300 mm
150# R.F. & D. (STANDARD FLANGE)	BOLTED COVER	STEAM	150 PSI @ 565ºF	1035 KPa @ 296ºC
		W.O.G.	275 PSI @ 100ºF	1897 KPa @ 38ºC
	KNOB TYPE COVER	W.O.G.	200 PSI @ 375ºF	1379 KPa @ 191ºC
NOM. RATING		**MEDIA**	**2" to 12"**	**50 mm to 300 mm**
300# R.F. & D. (EX. HEAVY FLANGE)	BOLTED COVER	STEAM	300 PSI @ 1125ºF	2069 KPa @ 448ºC
		W.O.G.	720 PSI @ 100ºF	4966 KPa @ 38ºC

KECKLEY

TECHNICAL DATA
DIMENSIONS AND WEIGHTS

Style SSGFV & SSGFV-K

Basket Strainer, Flanged
Stainless Steel (ASTM A 351, Grade CF8M)

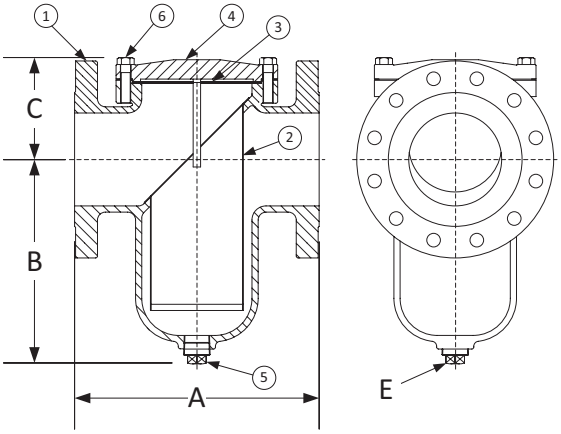

Style SSGFV Bolted Cover (Shown Above)
Available in 150 lb. and 300 lb. Class

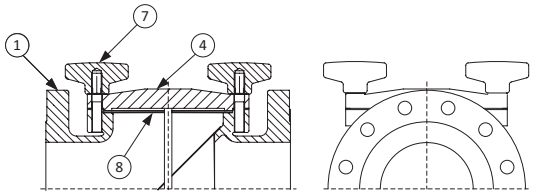

Style SSGFV-K Knob Type Cover (Shown Above)
Only Available in 150 lb. Class

PARTS LIST		
ITEM	DESCRIPTION	MATERIAL
1†	Body	Stainless Steel (ASTM A 351, Grade CF8M)
2	Basket	Stainless Steel (304)
3	Gasket	Spiral Wound Stainless Steel (304)
4	Cover	Stainless Steel (ASTM A 351, Grade CF8M)
5	Pipe Plug	Stainless Steel (316)
6	Hex Head Cap Screw	Stainless Steel (316)
7*	Knob	Stainless Steel
8*	Gasket	Viton (Max Temperature 400°F)

*Denotes parts for the Style SSGFV-K 150 lb. class only.
†Optional Body Materials Available in 304 and 400 Series SS, Alloy 20, Hastelloy, Inconel, Monel and Stellite.

STANDARD SCREENS SUPPLIED

SIZE		SCREEN GAGE	SCREEN PERFORATION					
			FOR STEAM		OPEN AREA	FOR LIQUID		OPEN AREA
in	mm		in	mm		in	mm	
1-1/2 to 3	40 to 80	22	3/64	1.2	33%	1/16	1.6	30%

Standard screens supplied are for **liquid service**, unless otherwise specified.
Options: Other meshes, perforations, and screen materials are available.

SIZE		DIMENSIONS															
		A				B				C				E			
		150#		300#		150#		300#		150#		300#		150#		300#	
in	mm	in	mm	in	mm	in	mm	in	mm	in	mm	in	mm	in	mm	in	mm
1-1/2	40	6-1/2	165	7	178	4-1/2	114	4	102	4	102	3-3/4	95	1/2	15	1/2	15
2	50	8-1/2	216	8-13/16	224	5-7/8	149	4-3/4	121	4-3/4	121	3-3/4	95	1/2	15	1	25
2-1/2	65	8	203	9	229	5-7/16	138	5-5/8	143	4-1/4	108	4-5/8	117	3/4	20	1	25
3	80	8-3/4	222	10-1/16	256	5-11/16	144	5-11/16	144	5-5/8	143	5-5/8	143	3/4	20	3/4	20
4	100	11-3/16	284	12	305	8-1/4	210	8-1/4	210	6-1/16	154	6-1/16	154	1	25	1	25
5	125	12-1/4	311	13-1/8	333	10-1/4	260	10-1/4	260	5-5/8	143	5-5/8	143	1	25	1	25
6	150	13-7/8	352	15-9/16	395	12-13/64	310	12-13/64	310	6-5/16	149	6-5/16	160	1-1/4	32	1-1/4	32
8	200	17-3/8	441	18-7/8	479	15-9/16	395	15-9/16	395	8-3/16	208	8-3/16	208	1-1/2	40	1-1/4	40
10	250	22	559	21-5/16	541	16	406	14-3/8	365	10-3/8	264	9-7/8	251	1-1/2	40	2	50
12	300	25	635	25-3/8	645	23-3/4	603	23-3/4	603	12-3/8	314	12-3/8	314	2	50	2	50
14	350	34-5/16	871	34-5/16	871	28	711	34-3/8	873	16-1/2	419	20-3/16	513	2	50	2	50

Certified dimensional drawings are available upon request.
†This table reflects only the nearest metric equivalents.

WEIGHTS

Size			2"		3"	4"	5"	6"	8"	10"	12"	14"
150	lbs	21	26	29	39	69	79	116	194	324	717	1275
	kgs	10	12	13	18	31	36	53	88	147	325	578
300	lbs	23	32	40	54	99	195	195	333	530	903	1424
	kgs	10	15	18	24	45	88	88	151	240	410	646

FLOW COEFFICIENTS

Size	C_V	Size	C_V	Size	C_V	Size	C_V
1-1/2"	32	3"	120.2	6"	743.1	12"	4980.6
2"	42.7	4"	276.7	8"	1486.3	14"	7600.0
2-1/2"	84	5"	442.7	10"	3051.6		

TOTAL SCREEN AREA (150 LB.)

Size	(in^2)	Size	(in^2)	Size	(in^2)	Size	(in^2)
1-1/2"	20.10	3"	54.53	6"	215.65	12"	1141.87
2"	53.42	4"	117.94	8"	401.76	14"	1200.00
2-1/2"	45.72	5"	129.00	10"	591.73		

*See DETERMINING RATIOS on page S5 of the Strainer Information Section for calculating NET FREE AREA of the screen to inside pipe area.

PRESSURE vs. TEMPERATURE CHART

150# & 300# Flanged Stainless Steel (ASTM A 351, Grade CF8M)
For use with Bolted Cover Only

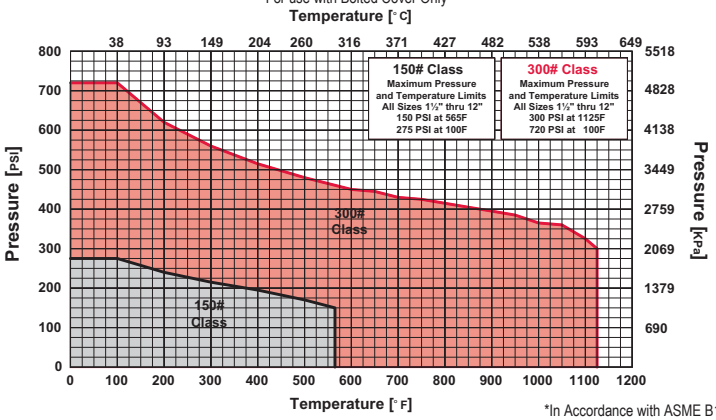

*In Accordance with ASME B16.5

KECKLEY

PRESSURE DROP CHART

Basket Strainers (Styles D, DV, BD, BDV, SD, SD-K, SSD, AND SSD-K)

This pressure drop chart is based on the flow of clean water through the Keckley strainer styles listed above with screen perforations ranging from 3/64” through 1/8”.

TO USE CHARTS:

Find your desired rate of flow (GPM) on the left hand side of the chart. Follow its corresponding horizontal line to the point where it intersects the diagonal line indicating the strainer pipe size. From this point of intersection, follow the vertical line down to the bottom of the chart to determine the approximate pressure drop.

CORRECTION FACTORS:

For finer mesh baskets that are backed with a perforated sheet, multiply the pressure drops shown at right by the following:

40 mesh	x 1.2
60 mesh	x 1.4
80 mesh	x 1.6
100 mesh	x 1.7

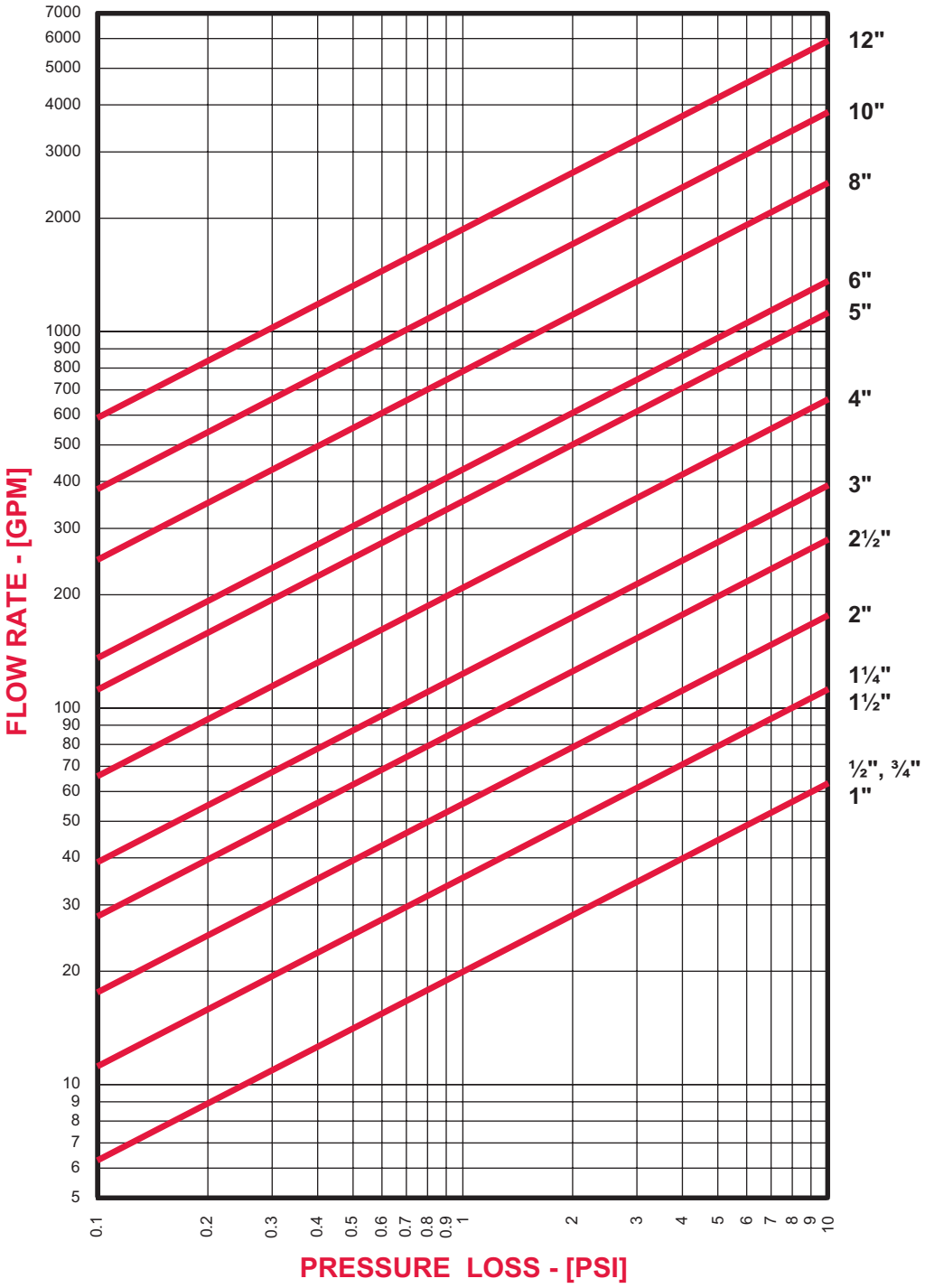

KECKLEY

PRESSURE DROP CHART

Basket Strainers (Styles GFV, HLC, BGFV, SGFV, SGFV-K, SSGFV, and SSGFV-K)

This pressure drop chart is based on the flow of clean water through the Keckley strainer styles listed above with screen perforations ranging from 3/64” through 1/8”.

TO USE CHARTS:

Find your desired rate of flow (GPM) on the left hand side of the chart. Follow its corresponding horizontal line to the point where it intersects the diagonal line indicating the strainer pipe size. From this point of intersection, follow the vertical line down to the bottom of the chart to determine the approximate pressure drop.

CORRECTION FACTORS:

For finer mesh baskets that are backed with a perforated sheet, multiply the pressure drops shown at right by the following:

40 mesh	x 1.2
60 mesh	x 1.4
80 mesh	x 1.6
100 mesh	x 1.7

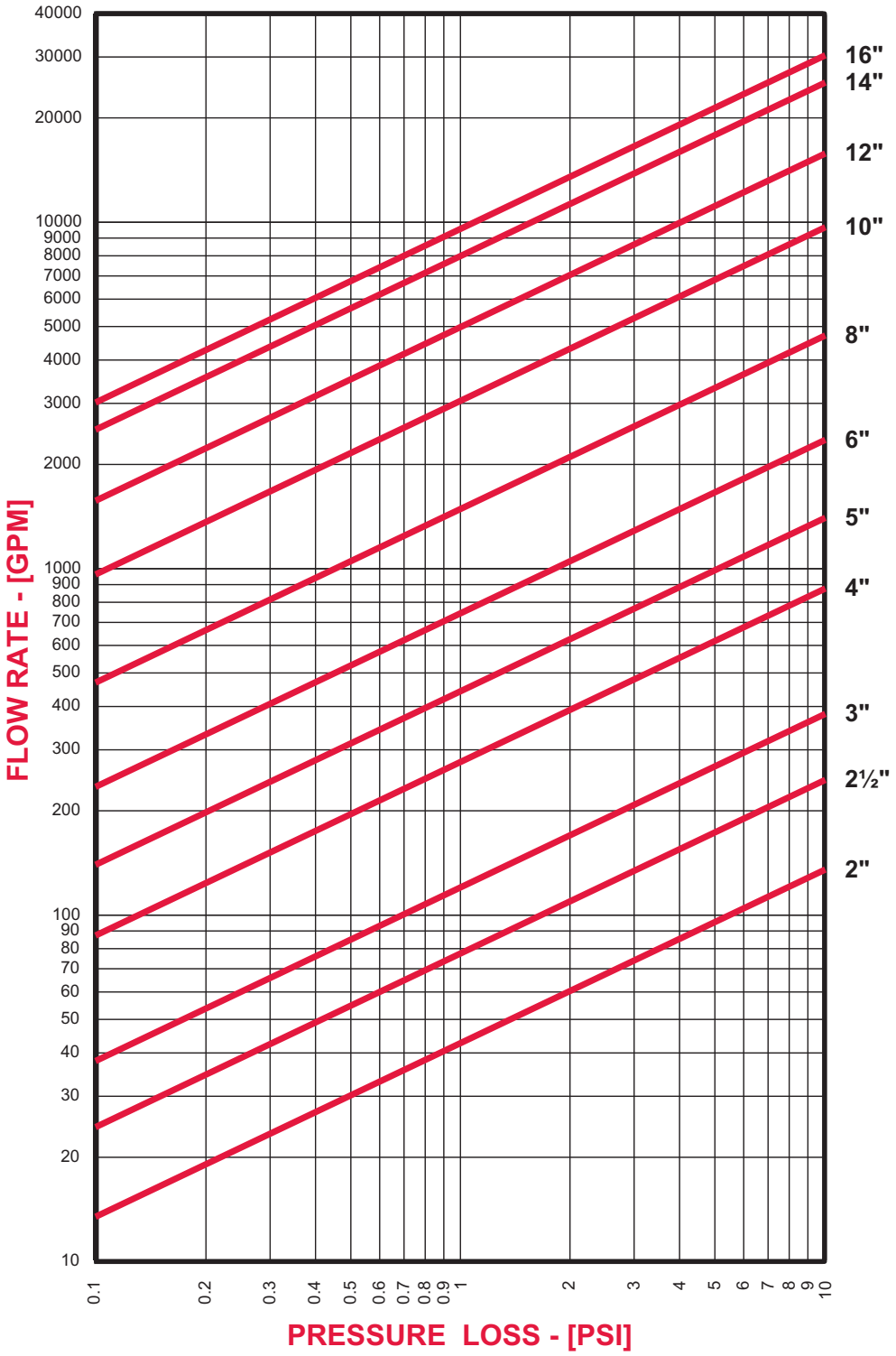

KECKLEY

PRESSURE DROP CHART

Basket Strainers (Styles KF-7 and BKF-7)

This pressure drop chart is based on the flow of clean water through the Keckley strainer styles listed above with screen perforations ranging from 3/64” through 1/4”.

TO USE CHARTS:

Find your desired rate of flow (GPM) on the left hand side of the chart. Follow its corresponding horizontal line to the point where it intersects the diagonal line indicating the strainer pipe size. From this point of intersection, follow the vertical line down to the bottom of the chart to determine the approximate pressure drop.

CORRECTION FACTORS:

For finer mesh baskets that are backed with a perforated sheet, multiply the pressure drops shown at right by the following:

40 mesh	x 1.2
60 mesh	x 1.4
80 mesh	x 1.6
100 mesh	x 1.7

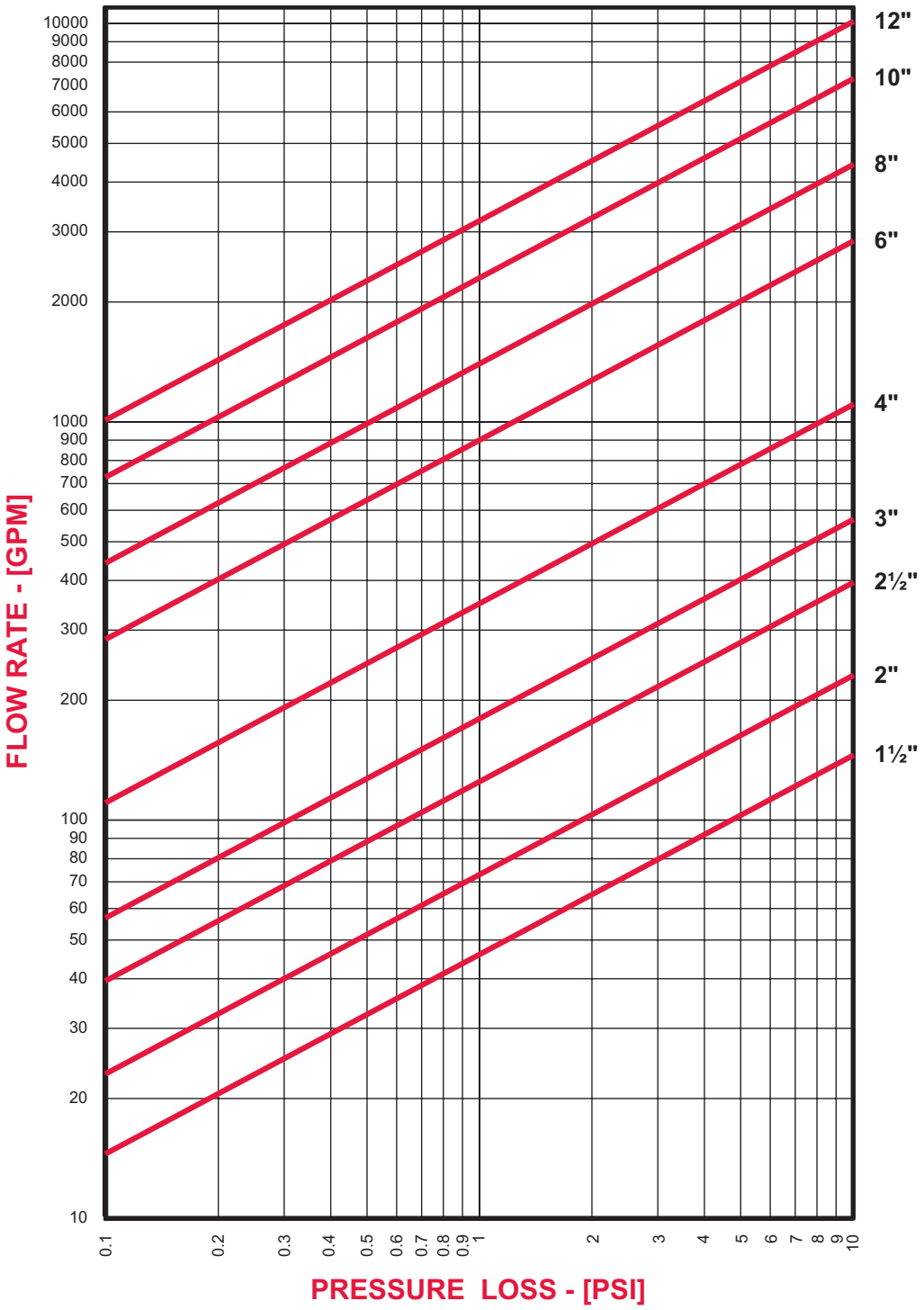

KECKLEY

PRESSURE DROP CHART

Basket Strainers (Styles KT-7)

This pressure drop chart is based on the flow of clean water through the Keckley strainer styles listed above with screen perforations ranging from 3/64" through 1/8".

TO USE CHARTS:

Find your desired rate of flow (GPM) on the left hand side of the chart. Follow its corresponding horizontal line to the point where it intersects the diagonal line indicating the strainer pipe size. From this point of intersection, follow the vertical line down to the bottom of the chart to determine the approximate pressure drop.

CORRECTION FACTORS:

For finer mesh baskets that are backed with a perforated sheet, multiply the pressure drops shown at right by the following:

40 mesh	x 1.2
60 mesh	x 1.4
80 mesh	x 1.6
100 mesh	x 1.7

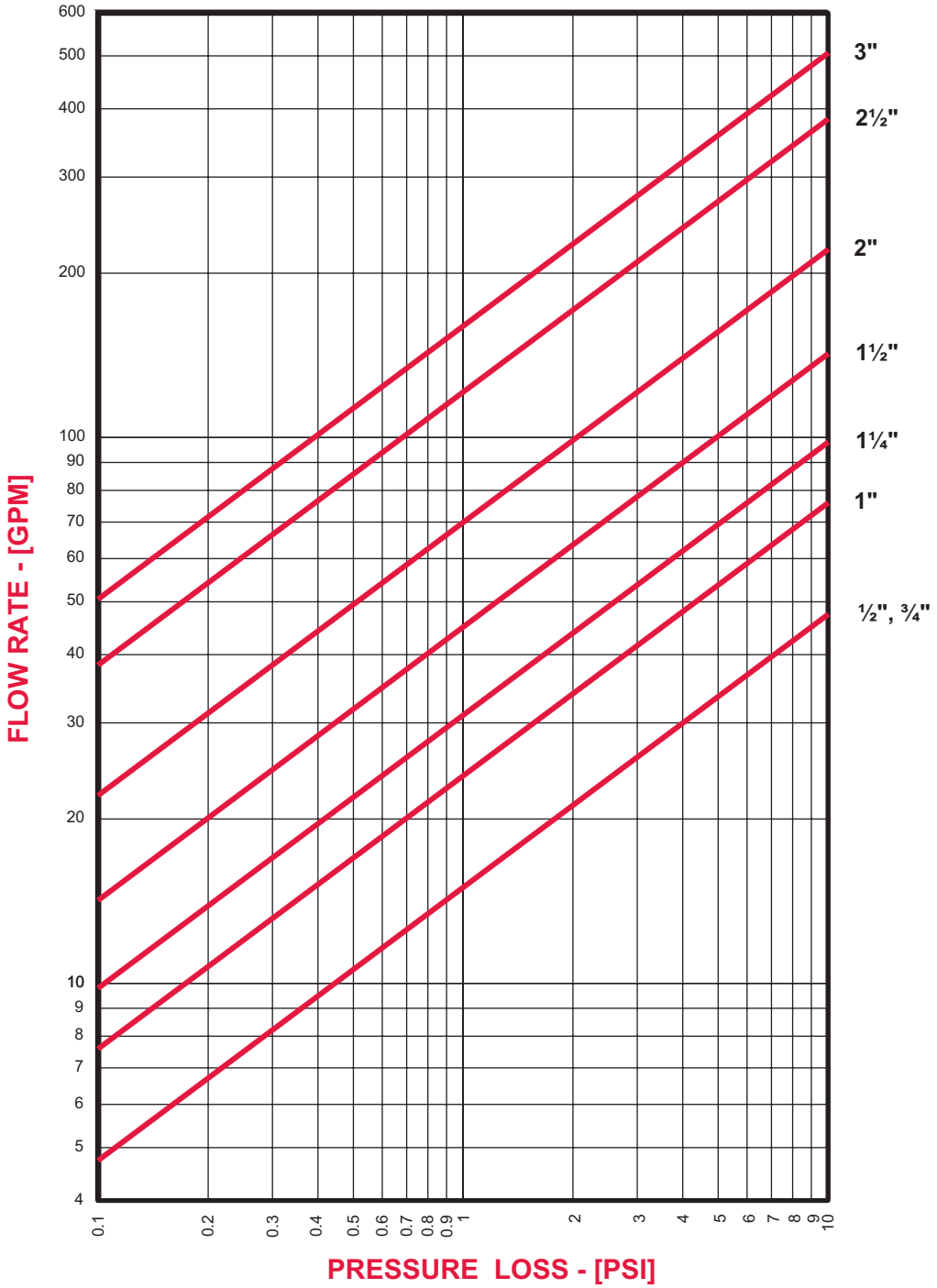

Alloy 20 Body (ASTM A 351, GRADE CN7M)
Style SSD-A2 300# Threaded ⅜" – 3" 2
Style SSD-KA2 150# Threaded ⅜" – 3" 2

Style SSGFV-A2 150# Flange 2" – 14" 3
Style SSGFV-KA2 150# Flange 2" – 14" 3
Style SSGFV-A2 300# Flange 2" – 14" 3

Hastelloy C276 Body (ASTM A 494, GRADE CW12MW)
Style SSD-HC 300# Threaded ⅜" – 3" 4
Style SSD-KHC 150# Threaded ⅜" – 3" 4

Style SSGFV-HC 150# Flange 2" – 14" 5
Style SSGFV-KHC 150# Flange 2" – 14" 5
Style SSGFV-HC 300# Flange 2" – 14" 5

Monel Body (ASTM A 494, GRADE M35-2)
Style SSD-A2 300# Threaded ⅜" – 3" 6
Style SSD-KA2 150# Threaded ⅜" – 3" 6

Style SSGFV-A2 150# Flange 2" – 14" 7
Style SSGFV-KA2 150# Flange 2" – 14" 7
Style SSGFV-A2 300# Flange 2" – 14" 7

Chrome-Moly Body (ASTM A 217, GRADE WC6)
Style SSD-C6 300# Threaded ⅜" – 3" 8
Style SSD-KC6 150# Threaded ⅜" – 3" 8

Chrome-Moly Body (Cont) (ASTM A 217, GRADE WC6)
Style SSGFV-C6 150# Flange 2" – 14" 9
Style SSGFV-KC6 150# Flange 2" – 14" 9
Style SSGFV-C6 300# Flange 2" – 14" 9

Chrome-Moly Body (ASTM A 217, GRADE WC9)
Style SSD-C9 300# Threaded ⅜" – 3" 10
Style SSD-KC9 150# Threaded ⅜" – 3" 10

Style SSGFV-C9 150# Flange 2" – 14" 11
Style SSGFV-KC9 150# Flange 2" – 14" 11
Style SSGFV-C9 300# Flange 2" – 14" 11

Titanium Body (ASTM B 37, GRADE PD7B)
Style SSD-T7 300# Threaded ⅜" – 3" 12
Style SSD-KT7 150# Threaded ⅜" – 3" 12

Style SSGFV-T7 150# Flange 2" – 14" 13
Style SSGFV-KT7 150# Flange 2" – 14" 13
Style SSGFV-T7 300# Flange 2" – 14" 13

Duplex Body (ASTM A 351, GRADE CD4MCu)
Style SSD-DP 300# Threaded ⅜" – 3" 14
Style SSD-KDP 150# Threaded ⅜" – 3" 14

Style SSGFV-DP 150# Flange 2" – 14" 15
Style SSGFV-KDP 150# Flange 2" – 14" 15
Style SSGFV-DP 300# Flange 2" – 14" 15

Pressure Drop Charts
Styles SD, SD-K, SSD, and SSD-K 16
Styles SGFV, SGFV-K, SSGFV, and SSGFV-K 17

KECKLEY

TECHNICAL DATA
DIMENSIONS AND WEIGHTS

Style SSD-A2 & SSD-KA2

Basket Strainer, Threaded
Cast Alloy 20 (ASTM A 351, Grade CN7M)

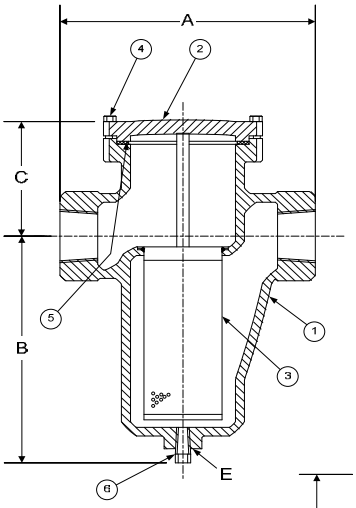

Style SSD -Bolted Cover
(Shown Above)
300 lb. Class

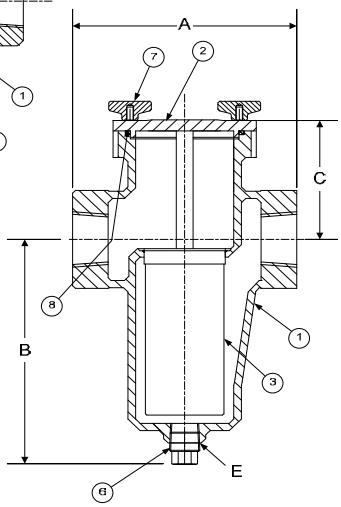

Style SSD-K -Knob Type Cover
(Shown Above)
Only Available in 150 lb. Class

PARTS LIST		
ITEM	DESCRIPTION	MATERIAL
1†	BODY	CAST ALLOY 20 (ASTM A 351, GRADE CN7M)
2	COVER	CAST ALLOY 20 (ASTM A 351, GRADE CN7M)
3	BASKET	STAINLESS STEEL (304)
4	HEX HEAD CAP SCREW	STAINLESS STEEL
5	GASKET	SPIRAL WOUND STAINLESS STEEL (304)
6	PLUG	STAINLESS STEEL (316)
7*	KNOB	STAINLESS STEEL (ASTM A 351, GRADE CF8M)
8*	O-RING	VITON (MAX TEMPERATURE 350°F)

*Denotes parts for the Style SSD-K 150 lb. class only.
†Optional Body Materials Available in 304 and 400 Series SS, Hastelloy C276, Inconel, Monel and Stellite.

STANDARD SCREENS SUPPLIED

SIZE		SCREEN GAGE	SCREEN PERFORATION					
			FOR STEAM		OPEN AREA	FOR LIQUID		OPEN AREA
in	mm		in	mm		in	mm	
3/8 to 2	10 to 50	28	1/32	.8	29%	1/16	1.6	30%
2-1/2 to 3	65 to 80	26	3/64	1.2	33%	1/16	1.6	30%

Standard screens supplied are for **liquid service**, unless otherwise specified.
Options: Other perforations, meshes, and screen materials are available.

SIZE		DIMENSIONS								WEIGHTS	
		A		B		C		E			
in	mm	in	mm	in	mm	in	mm	in	mm	lbs	kgs
3/8	10	4-9/16	116	4	102	3-1/8	79	3/8	10	6	3
1/2	15	4-9/16	116	4	102	3-1/8	79	3/8	10	6	3
3/4	20	4-9/16	116	4	102	3-1/8	79	3/8	10	6	3
1	25	5-5/16	135	4-7/8	124	3	76	3/8	10	9	4
1-1/4	32	6-5/16	160	6-1/2	165	4-1/8	105	1/2	15	14	6
1-1/2	40	6-5/16	160	6-1/2	165	4-1/8	105	1/2	15	14	6
2	50	8-1/4	210	7-7/8	200	4-3/4	121	3/4	20	27	12
2-1/2	65	9-5/8	245	8-3/4	222	4	102	1	25	34	15
3	80	11-1/4	286	11-3/8	289	5-7/8	149	1	25	60	27

Certified dimensional drawings are available upon request.
†This table reflects only the nearest metric equivalents.

FLOW COEFFICIENTS

Size	C_v	Size	C_v	Size	C_v
3/8"	19.9	1"	19.9	2"	55.7
1/2"	19.9	1-1/4"	35.4	2-1/2"	88.5
3/4"	19.9	1-1/2"	35.4	3"	123.3

TOTAL SCREEN AREA

Size	(in^2)	Size	(in^2)	Size	(in^2)
3/8"	11.72	1"	19.17	2"	64.36
1/2"	11.72	1-1/4"	41.65	2-1/2"	67.60
3/4"	11.72	1-1/2"	41.65	3"	128.17

*See DETERMINING RATIOS on page S5 of the Strainer Information Section for calculating NET FREE AREA of the screen to inside pipe area.

KECKLEY COMPANY • 3400 Cleveland Street • Skokie, Illinois 60076 1-800-KECKLEY

KECKLEY

TECHNICAL DATA
DIMENSIONS AND WEIGHTS

Styles SSGFV-A2 & SSGFV-KA2

Basket Strainer, Flanged
Cast Alloy 20 (ASTM A 351, Grade CN7M)

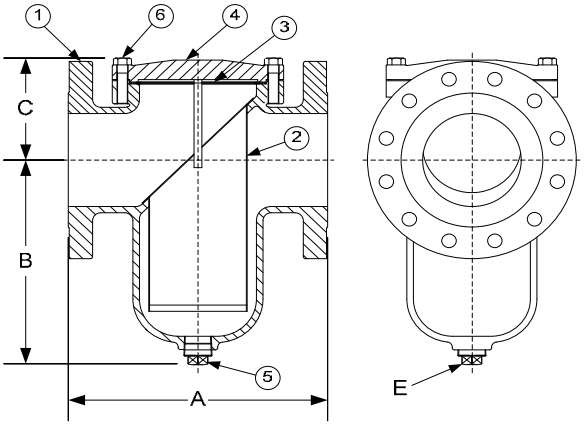

Style SSGFV -Bolted Cover (Shown Above)
Available in 150 lb. and 300 lb. Class

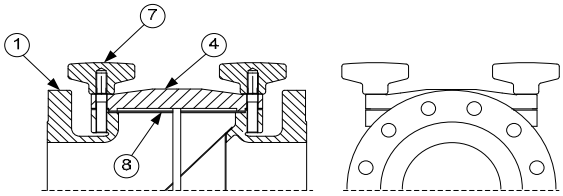

Style SSGFV-K -Knob Type Cover (Shown Above)
Only Available in 150 lb. Class

PARTS LIST		
ITEM	DESCRIPTION	MATERIAL
1†	BODY	CAST ALLOY 20 (ASTM A 351, GRADE CN7M)
2	BASKET	STAINLESS STEEL (304)
3	GASKET	SPIRAL WOUND STAINLESS STEEL (304)
4	COVER	CAST ALLOY 20 (ASTM A 351, GRADE CN7M)
5	PIPE PLUG	STAINLESS STEEL (316)
6	HEX HEAD CAP SCREW	STAINLESS STEEL (316)
7*	KNOB	STAINLESS STEEL
8*	GASKET	VITON (MAX TEMPERATURE 400°F)

*Denotes parts for the Style SSGFV-K 150 lb. Class only.
†Optional Body Materials Available in 304 and 400 Series SS, Hastelloy, Inconel, Monel and Stellite.

STANDARD SCREENS SUPPLIED

SIZE		SCREEN GAGE	SCREEN PERFORATION					
			FOR STEAM		OPEN AREA	FOR LIQUID		OPEN AREA
in	mm		in	mm		in	mm	
1-1/2 to 3	40 to 80	22	3/64	1.2	33%	1/16	1.6	30%
4 to 14	100 to 350	22	1/16	1.6	30%	1/8	3.2	43%

Standard screens supplied are for **liquid service**, unless otherwise specified.
Options: Other perforations, meshes, and screen materials are available.

SIZE		DIMENSIONS															
		A				B				C				E			
		150#		300#		150#		300#		150#		300#		150#		300#	
in	mm	in	mm	in	mm	in	mm	in	mm	in	mm	in	mm	in	mm	in	mm
1-1/2	40	6-1/2	165	7	178	4-1/2	114	4	102	4	102	3-3/4	95	1/2	15	1/2	15
2	50	8-1/2	216	8-13/16	224	5-7/8	149	4-3/4	121	4-3/4	121	3-3/4	95	1/2	15	1	25
2-1/2	65	8	203	9	229	5-7/16	138	5-5/8	143	4-1/4	108	4-5/8	117	3/4	20	1	25
3	80	8-3/4	222	10-1/16	256	5-11/16	144	5-11/16	144	5-5/8	143	5-5/8	143	3/4	20	3/4	20
4	100	11-3/16	284	12	305	8-1/4	210	8-1/4	210	6-1/16	154	6-1/16	154	1	25	1	25
5	125	12-1/4	311	13-1/8	333	10-1/4	260	10-1/4	260	5-5/8	143	5-5/8	143	1	25	1	25
6	150	13-7/8	352	15-9/16	395	12-13/64	310	12-13/64	310	6-5/16	160	6-5/16	160	1-1/4	32	1-1/4	32
8	200	17-3/8	441	18-7/8	479	15-9/16	395	15-9/16	395	8-3/16	208	8-3/16	208	1-1/2	40	1-1/2	40
10	250	22	559	21-5/16	541	16	406	14-3/8	365	10-3/8	264	9-7/8	251	1-1/2	40	2	50
12	300	25	635	25-3/8	645	23-3/4	603	23-3/4	603	12-3/8	314	12-3/8	314	2	50	2	50
14	350	34-5/16	871	34-5/16	871	28	711	34-3/8	873	16-1/2	419	20-3/16	513	2	50	2	50

Larger sizes available upon request.
Certified dimensional drawings are available upon request.

WEIGHTS												
Size		1-1/2"	2"	2-1/2"	3"	4"	5"	6"	8"	10"	12"	14"
150	lbs	22	30	35	39	69	110	125	270	360	450	1550
	kgs	10	14	16	18	31	50	57	122	163	204	703
300	Lbs	24	32	42	56	88	126	150	295	420	500	1650
	kgs	11	15	19	25	40	57	68	134	191	227	748

FLOW COEFFICIENTS

Size	C_v	Size	C_v	Size	C_v	Size	C_v
1-1/2"	32	3"	120.2	6"	743.1	12"	4980.6
2"	42.7	4"	276.7	8"	1486.3	14"	7600.0
2-1/2"	84	5"	442.7	10"	3051.6		

TOTAL SCREEN AREA (150 LB.)

Size	(in^2)	Size	(in^2)	Size	(in^2)	Size	(in^2)
1-1/2"	20.10	3"	54.53	6"	215.65	12"	1040.63
2"	53.42	4"	117.94	8"	401.76	14"	1200.0
2-1/2"	45.72	5"	129.0	10"	591.73		

*See DETERMINING RATIOS on page S5 of the Strainer Information Section for calculating NET FREE AREA of the screen to inside pipe area.

KECKLEY

TECHNICAL DATA
DIMENSIONS AND WEIGHTS

Style SSD-HC & SSD-KHC

Basket Strainer, Threaded
Cast Hastelloy C276 (ASTM A 494, Grade CW12MW)

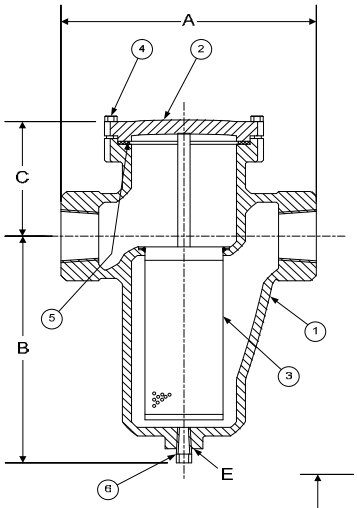

Style SSD -Bolted Cover
(Shown Above)
300 lb. Class

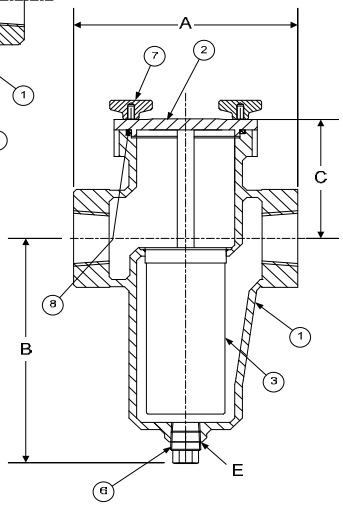

Style SSD-K -Knob Type Cover
(Shown Above)
Only Available in 150 lb. Class

PARTS LIST		
ITEM	DESCRIPTION	MATERIAL
1†	BODY	HASTELLOY C276 (ASTM A 494, GRADE CW12MW)
2	COVER	HASTELLOY C276 (ASTM A 494, GRADE CW12MW)
3	BASKET	STAINLESS STEEL (304)
4	HEX HEAD CAP SCREW	STAINLESS STEEL
5	GASKET	SPIRAL WOUND STAINLESS STEEL (304)
6	PLUG	STAINLESS STEEL (316)
7*	KNOB	STAINLESS STEEL (ASTM A 351, GRADE CF8M)
8*	O-RING	VITON (MAX TEMPERATURE 350°F)

*Denotes parts for the Style SSD-K 150 lb. class only.
†Optional Body Materials Available in 304 and 400 Series SS, Alloy 20, Inconel, Monel and Stellite.

STANDARD SCREENS SUPPLIED

SIZE		SCREEN GAGE	SCREEN PERFORATION					
			FOR STEAM		OPEN AREA	FOR LIQUID		OPEN AREA
in	mm		in	mm		in	mm	
3/8 to 2	10 to 50	28	1/32	.8	29%	1/16	1.6	30%
2-1/2 to 3	65 to 80	26	3/64	1.2	33%	1/16	1.6	30%

Standard screens supplied are for **liquid service**, unless otherwise specified.
Options: Other perforations, meshes, and screen materials are available.

SIZE		DIMENSIONS								WEIGHTS	
		A		B		C		E			
in	mm	in	mm	in	mm	in	mm	in	mm	lbs	kgs
3/8	10	4-9/16	116	4	102	3-1/8	79	3/8	10	6	3
1/2	15	4-9/16	116	4	102	3-1/8	79	3/8	10	6	3
3/4	20	4-9/16	116	4	102	3-1/8	79	3/8	10	6	3
1	25	5-5/16	135	4-7/8	124	3	76	3/8	10	9	4
1-1/4	32	6-5/16	160	6-1/2	165	4-1/8	105	1/2	15	14	6
1-1/2	40	6-5/16	160	6-1/2	165	4-1/8	105	1/2	15	14	6
2	50	8-1/4	210	7-7/8	200	4-3/4	121	3/4	20	27	12
2-1/2	65	9-5/8	245	8-3/4	222	4	102	1	25	34	15
3	80	11-1/4	286	11-3/8	289	5-7/8	149	1	25	60	27

Certified dimensional drawings are available upon request.
†This table reflects only the nearest metric equivalents.

FLOW COEFFICIENTS

Size	C_v	Size	C_v	Size	C_v
3/8"	19.9	1"	19.9	2"	55.7
1/2"	19.9	1-1/4"	35.4	2-1/2"	88.5
3/4"	19.9	1-1/2"	35.4	3"	123.3

TOTAL SCREEN AREA

Size	(in^2)	Size	(in^2)	Size	(in^2)
3/8"	11.72	1"	19.17	2"	64.36
1/2"	11.72	1-1/4"	41.65	2-1/2"	67.60
3/4"	11.72	1-1/2"	41.65	3"	128.17

*See DETERMINING RATIOS on page S5 of the Strainer Information Section for calculating NET FREE AREA of the screen to inside pipe area.

KECKLEY COMPANY • 3400 Cleveland Street • Skokie, Illinois 60076 1-800-KECKLEY

KECKLEY

TECHNICAL DATA
DIMENSIONS AND WEIGHTS

Styles SSGFV-HC & SSGFV-KHC

Basket Strainer, Flanged
Cast Hastelloy C276 (ASTM A 494, Grade CW12MW)

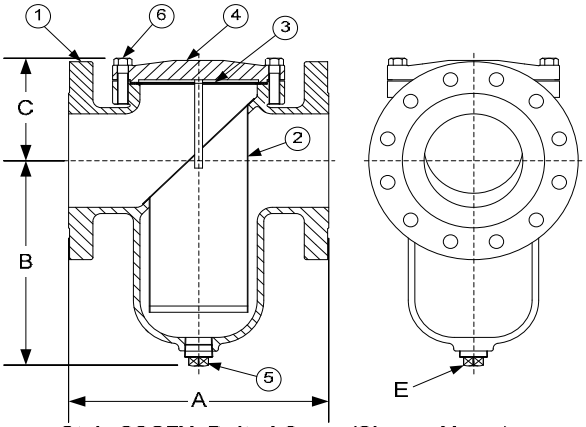

Style SSGFV -Bolted Cover (Shown Above)
Available in 150 lb. and 300 lb. Class

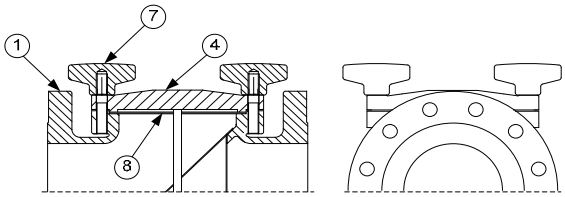

Style SSGFV-K -Knob Type Cover (Shown Above)
Only Available in 150 lb. Class

PARTS LIST		
ITEM	DESCRIPTION	MATERIAL
1†	BODY	HASTELLOY C276 (ASTM A 494, GRADE CW12MW)
2	BASKET	STAINLESS STEEL (304)
3	GASKET	SPIRAL WOUND STAINLESS STEEL (304)
4	COVER	HASTELLOY C276 (ASTM A 494, GRADE CW12MW)
5	PIPE PLUG	STAINLESS STEEL (316)
6	HEX HEAD CAP SCREW	STAINLESS STEEL (316)
7*	KNOB	STAINLESS STEEL
8*	GASKET	VITON (MAX TEMPERATURE 400°F)

*Denotes parts for the Style SSGFV-K 150 lb. Class only.
†Optional Body Materials Available in 304 and 400 Series SS, Alloy 20, Inconel, Monel and Stellite.

STANDARD SCREENS SUPPLIED

SIZE		SCREEN GAGE	SCREEN PERFORATION					
			FOR STEAM		OPEN AREA	FOR LIQUID		OPEN AREA
in	mm		in	mm		in	mm	
1-1/2 to 3	40 to 80	22	3/64	1.2	33%	1/16	1.6	30%
4 to 14	100 to 350	22	1/16	1.6	30%	1/8	3.2	43%

Standard screens supplied are for **liquid service**, unless otherwise specified.
Options: Other perforations, meshes, and screen materials are available.

SIZE		DIMENSIONS															
		A				B				C				E			
		150#		300#		150#		300#		150#		300#		150#		300#	
in	mm	in	mm	in	mm	in	mm	in	mm	in	mm	in	mm	in	mm	in	mm
1-1/2	40	6-1/2	165	7	178	4-1/2	114	4	102	4	102	3-3/4	95	1/2	15	1/2	15
2	50	8-1/2	216	8-13/16	224	5-7/8	149	4-3/4	121	4-3/4	121	3-3/4	95	1/2	15	1	25
2-1/2	65	8	203	9	229	5-7/16	138	5-5/8	143	4-1/4	108	4-5/8	117	3/4	20	1	25
3	80	8-3/4	222	10-1/16	256	5-11/16	144	5-11/16	144	5-5/8	143	5-5/8	143	3/4	20	3/4	20
4	100	11-3/16	284	12	305	8-1/4	210	8-1/4	210	6-1/16	154	6-1/16	154	1	25	1	25
5	125	12-1/4	311	13-1/8	333	10-1/4	260	10-1/4	260	5-5/8	143	5-5/8	143	1	25	1	25
6	150	13-7/8	352	15-9/16	395	12-13/64	310	12-13/64	310	6-5/16	160	6-5/16	160	1-1/4	32	1-1/4	32
8	200	17-3/8	441	18-7/8	479	15-9/16	395	15-9/16	395	8-3/16	208	8-3/16	208	1-1/2	40	1-1/2	40
10	250	22	559	21-5/16	541	16	406	14-3/8	365	10-3/8	264	9-7/8	251	1-1/2	40	2	50
12	300	25	635	25-3/8	645	23-3/4	603	23-3/4	603	12-3/8	314	12-3/8	314	2	50	2	50
14	350	34-5/16	871	34-5/16	871	28	711	34-3/8	873	16-1/2	419	20-3/16	513	2	50	2	50

Larger sizes available upon request.
Certified dimensional drawings are available upon request.

WEIGHTS												
Size		1-1/2"	2"	2-1/2"	3"	4"	5"	6"	8"	10"	12"	14"
150	lbs	22	30	35	39	69	110	125	270	360	450	1550
	kgs	10	14	16	18	31	50	57	122	163	204	703
300	Lbs	24	32	42	56	88	126	150	295	420	500	1650
	kgs	11	15	19	25	40	57	68	134	191	227	748

FLOW COEFFICIENTS

Size	C_v	Size	C_v	Size	C_v	Size	C_v
1-1/2"	32	3"	120.2	6"	743.1	12"	4980.6
2"	42.7	4"	276.7	8"	1486.3	14"	7600.0
2-1/2"	84	5"	442.7	10"	3051.6		

TOTAL SCREEN AREA (150 LB.)

Size	(in^2)	Size	(in^2)	Size	(in^2)	Size	(in^2)
1-1/2"	20.10	3"	54.53	6"	215.65	12"	1040.63
2"	53.42	4"	117.94	8"	401.76	14"	1200.0
2-1/2"	45.72	5"	129.0	10"	591.73		

*See DETERMINING RATIOS on page S5 of the Strainer Information Section for calculating NET FREE AREA of the screen to inside pipe area.

KECKLEY

TECHNICAL DATA
DIMENSIONS AND WEIGHTS

Style SSD-ML & SSD-ML

Basket Strainer, Threaded
Cast Monel (ASTM A 494, Grade M35-2)

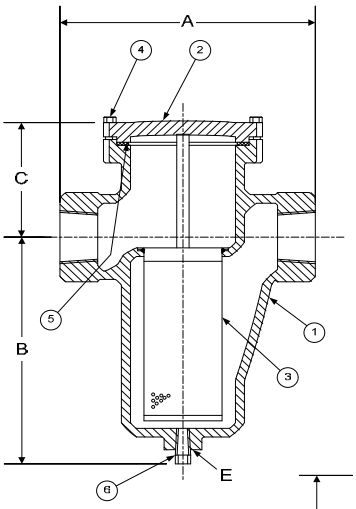

Style SSD -Bolted Cover
(Shown Above)
300 lb. Class

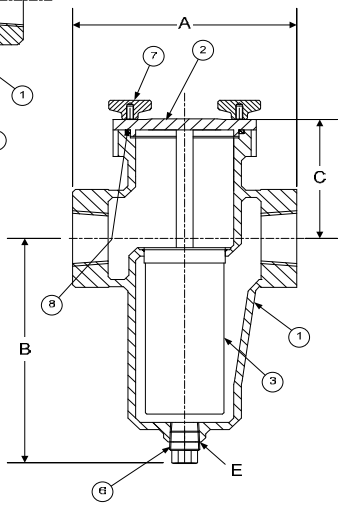

Style SSD-K -Knob Type Cover
(Shown Above)
Only Available in 150 lb. Class

PARTS LIST		
ITEM	DESCRIPTION	MATERIAL
1†	BODY	MONEL (ASTM A 494, GRADE M35-2)
2	COVER	MONEL (ASTM A 494, GRADE M35-2)
3	BASKET	STAINLESS STEEL (304)
4	HEX HEAD CAP SCREW	STAINLESS STEEL
5	GASKET	SPIRAL WOUND STAINLESS STEEL (304)
6	PLUG	STAINLESS STEEL (316)
7*	KNOB	STAINLESS STEEL (ASTM A 351, GRADE CF8M)
8*	O-RING	VITON (MAX TEMPERATURE 350°F)

*Denotes parts for the Style SSD-K 150 lb. class only.
†Optional Body Materials Available in 304 and 400 Series SS, Alloy 20, Inconel, Hastelloy C276, and Stellite.

STANDARD SCREENS SUPPLIED

SIZE		SCREEN GAGE	SCREEN PERFORATION					
			FOR STEAM		OPEN AREA	FOR LIQUID		OPEN AREA
in	mm		in	mm		in	mm	
3/8 to 2	10 to 50	28	1/32	.8	29%	1/16	1.6	30%
2-1/2 to 3	65 to 80	26	3/64	1.2	33%	1/16	1.6	30%

Standard screens supplied are for **liquid service**, unless otherwise specified.
Options: Other perforations, meshes, and screen materials are available.

SIZE		DIMENSIONS								WEIGHTS	
		A		B		C		E			
in	mm	in	mm	in	mm	in	mm	in	mm	lbs	kgs
3/8	10	4-9/16	116	4	102	3-1/8	79	3/8	10	6	3
1/2	15	4-9/16	116	4	102	3-1/8	79	3/8	10	6	3
3/4	20	4-9/16	116	4	102	3-1/8	79	3/8	10	6	3
1	25	5-5/16	135	4-7/8	124	3	76	3/8	10	9	4
1-1/4	32	6-5/16	160	6-1/2	165	4-1/8	105	1/2	15	14	6
1-1/2	40	6-5/16	160	6-1/2	165	4-1/8	105	1/2	15	14	6
2	50	8-1/4	210	7-7/8	200	4-3/4	121	3/4	20	27	12
2-1/2	65	9-5/8	245	8-3/4	222	4	102	1	25	34	15
3	80	11-1/4	286	11-3/8	289	5-7/8	149	1	25	60	27

Certified dimensional drawings are available upon request.
†This table reflects only the nearest metric equivalents.

FLOW COEFFICIENTS

Size	C_v	Size	C_v	Size	C_v
3/8"	19.9	1"	19.9	2"	55.7
1/2"	19.9	1-1/4"	35.4	2-1/2"	88.5
3/4"	19.9	1-1/2"	35.4	3"	123.3

TOTAL SCREEN AREA

Size	(in^2)	Size	(in^2)	Size	(in^2)
3/8"	11.72	1"	19.17	2"	64.36
1/2"	11.72	1-1/4"	41.65	2-1/2"	67.60
3/4"	11.72	1-1/2"	41.65	3"	128.17

*See DETERMINING RATIOS on page S5 of the Strainer Information Section for calculating NET FREE AREA of the screen to inside pipe area.

KECKLEY

TECHNICAL DATA
DIMENSIONS AND WEIGHTS

Styles SSGFV-ML & SSGFV-KML

Basket Strainer, Flanged
Cast Monel (ASTM A 494, Grade M35-2)

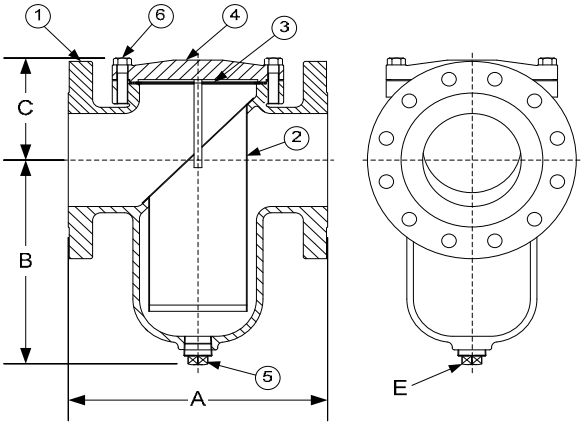

Style SSGFV -Bolted Cover (Shown Above)
Available in 150 lb. and 300 lb. Class

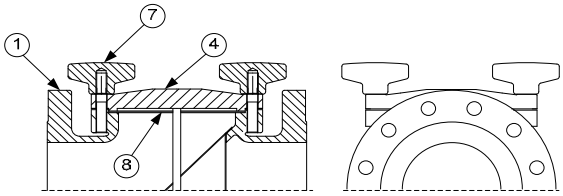

Style SSGFV-K -Knob Type Cover (Shown Above)
Only Available in 150 lb. Class

PARTS LIST		
ITEM	DESCRIPTION	MATERIAL
1†	BODY	MONEL (ASTM A 494, GRADE M35-2)
2	BASKET	STAINLESS STEEL (304)
3	GASKET	SPIRAL WOUND STAINLESS STEEL (304)
4	COVER	MONEL (ASTM A 494, GRADE M35-2)
5	PIPE PLUG	STAINLESS STEEL (316)
6	HEX HEAD CAP SCREW	STAINLESS STEEL (316)
7*	KNOB	STAINLESS STEEL
8*	GASKET	VITON (MAX TEMPERATURE 400°F)

*Denotes parts for the Style SSGFV-K 150 lb. Class only.
†Optional Body Materials Available in 304 and 400 Series SS, Hastelloy C276, Inconel, Alloy 20, and Stellite.

STANDARD SCREENS SUPPLIED

SIZE		SCREEN GAGE	SCREEN PERFORATION					
			FOR STEAM		OPEN AREA	FOR LIQUID		OPEN AREA
in	mm		in	mm		in	mm	
1-1/2 to 3	40 to 80	22	3/64	1.2	33%	1/16	1.6	30%
4 to 14	100 to 350	22	1/16	1.6	30%	1/8	3.2	43%

Standard screens supplied are for **liquid service**, unless otherwise specified.
Options: Other perforations, meshes, and screen materials are available.

SIZE		DIMENSIONS															
		A				B				C				E			
		150#		300#		150#		300#		150#		300#		150#		300#	
in	mm	in	mm	in	mm	in	mm	in	mm	in	mm	in	mm	in	mm	in	mm
1-1/2	40	6-1/2	165	7	178	4-1/2	114	4	102	4	102	3-3/4	95	1/2	15	1/2	15
2	50	8-1/2	216	8-13/16	224	5-7/8	149	4-3/4	121	4-3/4	121	3-3/4	95	1/2	15	1	25
2-1/2	65	8	203	9	229	5-7/16	138	5-5/8	143	4-1/4	108	4-5/8	117	3/4	20	1	25
3	80	8-3/4	222	10-1/16	256	5-11/16	144	5-11/16	144	5-5/8	143	5-5/8	143	3/4	20	3/4	20
4	100	11-3/16	284	12	305	8-1/4	210	8-1/4	210	6-1/16	154	6-1/16	154	1	25	1	25
5	125	12-1/4	311	13-1/8	333	10-1/4	260	10-1/4	260	5-5/8	143	5-5/8	143	1	25	1	25
6	150	13-7/8	352	15-9/16	395	12-13/64	310	12-13/64	310	6-5/16	160	6-5/16	160	1-1/4	32	1-1/4	32
8	200	17-3/8	441	18-7/8	479	15-9/16	395	15-9/16	395	8-3/16	208	8-3/16	208	1-1/2	40	1-1/2	40
10	250	22	559	21-5/16	541	16	406	14-3/8	365	10-3/8	264	9-7/8	251	1-1/2	40	2	50
12	300	25	635	25-3/8	645	23-3/4	603	23-3/4	603	12-3/8	314	12-3/8	314	2	50	2	50
14	350	34-5/16	871	34-5/16	871	28	711	34-3/8	873	16-1/2	419	20-3/16	513	2	50	2	50

Larger sizes available upon request.
Certified dimensional drawings are available upon request.

WEIGHTS												
Size		1-1/2"	2"	2-1/2"	3"	4"	5"	6"	8"	10"	12"	14"
150	lbs	22	30	35	39	69	110	125	270	360	450	1550
	kgs	10	14	16	18	31	50	57	122	163	204	703
300	Lbs	24	32	42	56	88	126	150	295	420	500	1650
	kgs	11	15	19	25	40	57	68	134	191	227	748

FLOW COEFFICIENTS

Size	C_v	Size	C_v	Size	C_v	Size	C_v
1-1/2"	32	3"	120.2	6"	743.1	12"	4980.6
2"	42.7	4"	276.7	8"	1486.3	14"	7600.0
2-1/2"	84	5"	442.7	10"	3051.6		

TOTAL SCREEN AREA (150 LB.)

Size	(in^2)	Size	(in^2)	Size	(in^2)	Size	(in^2)
1-1/2"	20.10	3"	54.53	6"	215.65	12"	1040.63
2"	53.42	4"	117.94	8"	401.76	14"	1200.0
2-1/2"	45.72	5"	129.0	10"	591.73		

*See DETERMINING RATIOS on page S5 of the Strainer Information Section for calculating NET FREE AREA of the screen to inside pipe area.

KECKLEY

TECHNICAL DATA
DIMENSIONS AND WEIGHTS

Style SD-C6 & SD-KC6

Basket Strainer, Threaded
Cast Chrome-Moly (ASTM A 217, Grade WC6)

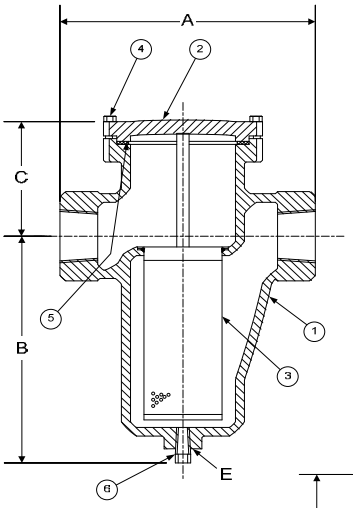

Style SSD -Bolted Cover
(Shown Above)
300 lb. Class

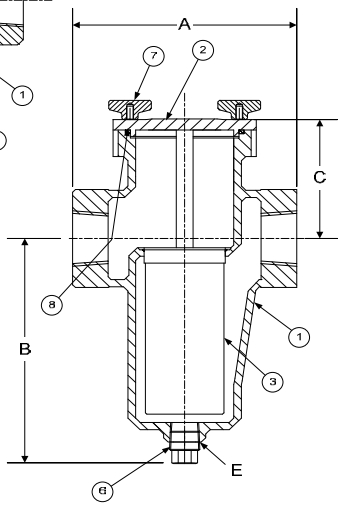

Style SSD-K -Knob Type Cover
(Shown Above)
Only Available in 150 lb. Class

PARTS LIST		
ITEM	DESCRIPTION	MATERIAL
1†	BODY	CHROME-MOLY (ASTM A 217, GRADE WC6)
2	COVER	CHROME-MOLY (ASTM A 217, GRADE WC6)
3	BASKET	STAINLESS STEEL (304)
4	HEX HEAD CAP SCREW	STAINLESS STEEL
5	GASKET	SPIRAL WOUND STAINLESS STEEL (304)
6	PLUG	STAINLESS STEEL (316)
7*	KNOB	STAINLESS STEEL (ASTM A 351, GRADE CF8M)
8*	O-RING	VITON (MAX TEMPERATURE 350°F)

*Denotes parts for the Style SSD-K 150 lb. class only.
†Optional Body Materials Available in 304 and 400 Series SS, Alloy 20, Inconel, Hastelloy C276, and Stellite.

STANDARD SCREENS SUPPLIED

SIZE		SCREEN GAGE	SCREEN PERFORATION					
			FOR STEAM		OPEN AREA	FOR LIQUID		OPEN AREA
in	mm		in	mm		in	mm	
3/8 to 2	10 to 50	28	1/32	.8	29%	1/16	1.6	30%
2-1/2 to 3	65 to 80	26	3/64	1.2	33%	1/16	1.6	30%

Standard screens supplied are for **liquid service**, unless otherwise specified.
Options: Other perforations, meshes, and screen materials are available.

SIZE		DIMENSIONS								WEIGHTS	
		A		B		C		E			
in	mm	in	mm	in	mm	in	mm	in	mm	lbs	kgs
3/8	10	4-9/16	116	4	102	3-1/8	79	3/8	10	6	3
1/2	15	4-9/16	116	4	102	3-1/8	79	3/8	10	6	3
3/4	20	4-9/16	116	4	102	3-1/8	79	3/8	10	6	3
1	25	5-5/16	135	4-7/8	124	3	76	3/8	10	9	4
1-1/4	32	6-5/16	160	6-1/2	165	4-1/8	105	1/2	15	14	6
1-1/2	40	6-5/16	160	6-1/2	165	4-1/8	105	1/2	15	14	6
2	50	8-1/4	210	7-7/8	200	4-3/4	121	3/4	20	27	12
2-1/2	65	9-5/8	245	8-3/4	222	4	102	1	25	34	15
3	80	11-1/4	286	11-3/8	289	5-7/8	149	1	25	60	27

Certified dimensional drawings are available upon request.
†This table reflects only the nearest metric equivalents.

FLOW COEFFICIENTS

Size	C_v	Size	C_v	Size	C_v
3/8"	19.9	1"	19.9	2"	55.7
1/2"	19.9	1-1/4"	35.4	2-1/2"	88.5
3/4"	19.9	1-1/2"	35.4	3"	123.3

TOTAL SCREEN AREA

Size	(in^2)	Size	(in^2)	Size	(in^2)
3/8"	11.72	1"	19.17	2"	64.36
1/2"	11.72	1-1/4"	41.65	2-1/2"	67.60
3/4"	11.72	1-1/2"	41.65	3"	128.17

*See DETERMINING RATIOS on page S5 of the Strainer Information Section for calculating NET FREE AREA of the screen to inside pipe area.

KECKLEY

TECHNICAL DATA
DIMENSIONS AND WEIGHTS

Styles SGFV-C6 & SGFV-KC6

Basket Strainer, Flanged
Cast Chrome-Moly (ASTM A 217, Grade WC6)

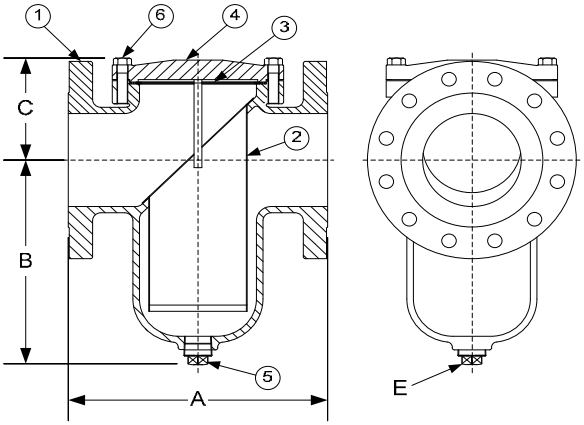

Style SSGFV -Bolted Cover (Shown Above)
Available in 150 lb. and 300 lb. Class

PARTS LIST		
ITEM	DESCRIPTION	MATERIAL
1†	BODY	CHROME-MOLY (ASTM A 217, GRADE WC6)
2	BASKET	STAINLESS STEEL (304)
3	GASKET	SPIRAL WOUND STAINLESS STEEL (304)
4	COVER	CHROME-MOLY (ASTM A 217, GRADE WC6)
5	PIPE PLUG	STAINLESS STEEL (316)
6	HEX HEAD CAP SCREW	STAINLESS STEEL (316)
7*	KNOB	STAINLESS STEEL
8*	GASKET	VITON (MAX TEMPERATURE 400°F)

*Denotes parts for the Style SSGFV-K 150 lb. Class only.
†Optional Body Materials Available in 304 and 400 Series SS, Hastelloy C276, Inconel, Alloy 20, and Stellite.

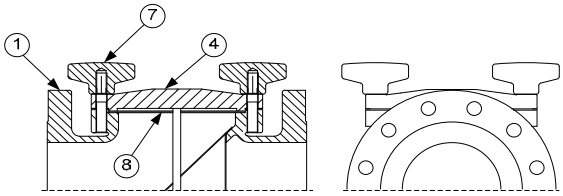

Style SSGFV-K -Knob Type Cover (Shown Above)
Only Available in 150 lb. Class

STANDARD SCREENS SUPPLIED

SIZE		SCREEN GAGE	SCREEN PERFORATION					
			FOR STEAM		OPEN AREA	FOR LIQUID		OPEN AREA
in	mm		in	mm		in	mm	
1-1/2 to 3	40 to 80	22	3/64	1.2	33%	1/16	1.6	30%
4 to 14	100 to 350	22	1/16	1.6	30%	1/8	3.2	43%

Standard screens supplied are for **liquid service**, unless otherwise specified.
Options: Other perforations, meshes, and screen materials are available.

SIZE		DIMENSIONS															
		A				B				C				E			
		150#		300#		150#		300#		150#		300#		150#		300#	
in	mm	in	mm	in	mm	in	mm	in	mm	in	mm	in	mm	in	mm	in	mm
1-1/2	40	6-1/2	165	7	178	4-1/2	114	4	102	4	102	3-3/4	95	1/2	15	1/2	15
2	50	8-1/2	216	8-13/16	224	5-7/8	149	4-3/4	121	4-3/4	121	3-3/4	95	1/2	15	1	25
2-1/2	65	8	203	9	229	5-7/16	138	5-5/8	143	4-1/4	108	4-5/8	117	3/4	20	1	25
3	80	8-3/4	222	10-1/16	256	5-11/16	144	5-11/16	144	5-5/8	143	5-5/8	143	3/4	20	3/4	20
4	100	11-3/16	284	12	305	8-1/4	210	8-1/4	210	6-1/16	154	6-1/16	154	1	25	1	25
5	125	12-1/4	311	13-1/8	333	10-1/4	260	10-1/4	260	5-5/8	143	5-5/8	143	1	25	1	25
6	150	13-7/8	352	15-9/16	395	12-13/64	310	12-13/64	310	6-5/16	160	6-5/16	160	1-1/4	32	1-1/4	32
8	200	17-3/8	441	18-7/8	479	15-9/16	395	15-9/16	395	8-3/16	208	8-3/16	208	1-1/2	40	1-1/2	40
10	250	22	559	21-5/16	541	16	406	14-3/8	365	10-3/8	264	9-7/8	251	1-1/2	40	2	50
12	300	25	635	25-3/8	645	23-3/4	603	23-3/4	603	12-3/8	314	12-3/8	314	2	50	2	50
14	350	34-5/16	871	34-5/16	871	28	711	34-3/8	873	16-1/2	419	20-3/16	513	2	50	2	50

Larger sizes available upon request.
Certified dimensional drawings are available upon request.

WEIGHTS												
Size		1-1/2"	2"	2-1/2"	3"	4"	5"	6"	8"	10"	12"	14"
150	lbs	22	30	35	39	69	110	125	270	360	450	1550
	kgs	10	14	16	18	31	50	57	122	163	204	703
300	Lbs	24	32	42	56	88	126	150	295	420	500	1650
	kgs	11	15	19	25	40	57	68	134	191	227	748

FLOW COEFFICIENTS

Size	C_v	Size	C_v	Size	C_v	Size	C_v
1-1/2"	32	3"	120.2	6"	743.1	12"	4980.6
2"	42.7	4"	276.7	8"	1486.3	14"	7600.0
2-1/2"	84	5"	442.7	10"	3051.6		

TOTAL SCREEN AREA (150 LB.)

Size	(in^2)	Size	(in^2)	Size	(in^2)	Size	(in^2)
1-1/2"	20.10	3"	54.53	6"	215.65	12"	1040.63
2"	53.42	4"	117.94	8"	401.76	14"	1200.0
2-1/2"	45.72	5"	129.0	10"	591.73		

*See DETERMINING RATIOS on page S5 of the Strainer Information Section for calculating NET FREE AREA of the screen to inside pipe area.

KECKLEY

TECHNICAL DATA
DIMENSIONS AND WEIGHTS

Style SD-C9 & SD-KC9

Basket Strainer, Threaded
Cast Chrome-Moly (ASTM A 217, Grade WC9)

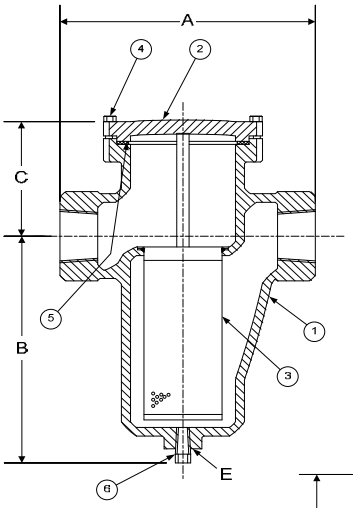

Style SSD -Bolted Cover
(Shown Above)
300 lb. Class

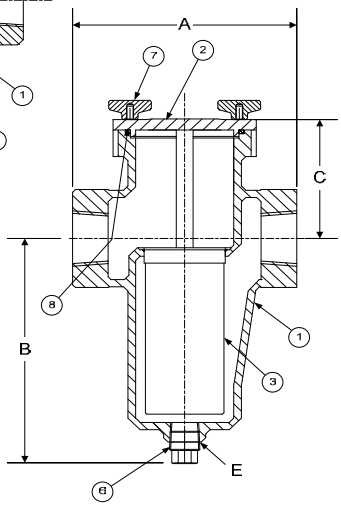

Style SSD-K -Knob Type Cover
(Shown Above)
Only Available in 150 lb. Class

PARTS LIST		
ITEM	DESCRIPTION	MATERIAL
1†	BODY	CHROME-MOLY (ASTM A 217, GRADE WC9)
2	COVER	CHROME-MOLY (ASTM A 217, GRADE WC9)
3	BASKET	STAINLESS STEEL (304)
4	HEX HEAD CAP SCREW	STAINLESS STEEL
5	GASKET	SPIRAL WOUND STAINLESS STEEL (304)
6	PLUG	STAINLESS STEEL (316)
7*	KNOB	STAINLESS STEEL (ASTM A 351, GRADE CF8M)
8*	O-RING	VITON (MAX TEMPERATURE 350°F)

*Denotes parts for the Style SSD-K 150 lb. class only.
†Optional Body Materials Available in 304 and 400 Series SS, Alloy 20, Inconel, Hastelloy C276, and Stellite.

STANDARD SCREENS SUPPLIED

SIZE		SCREEN GAGE	SCREEN PERFORATION					
			FOR STEAM		OPEN AREA	FOR LIQUID		OPEN AREA
in	mm		in	mm		in	mm	
3/8 to 2	10 to 50	28	1/32	.8	29%	1/16	1.6	30%
2-1/2 to 3	65 to 80	26	3/64	1.2	33%	1/16	1.6	30%

Standard screens supplied are for **liquid service**, unless otherwise specified.
Options: Other perforations, meshes, and screen materials are available.

SIZE		DIMENSIONS								WEIGHTS	
		A		B		C		E			
in	mm	in	mm	in	mm	in	mm	in	mm	lbs	kgs
3/8	10	4-9/16	116	4	102	3-1/8	79	3/8	10	6	3
1/2	15	4-9/16	116	4	102	3-1/8	79	3/8	10	6	3
3/4	20	4-9/16	116	4	102	3-1/8	79	3/8	10	6	3
1	25	5-5/16	135	4-7/8	124	3	76	3/8	10	9	4
1-1/4	32	6-5/16	160	6-1/2	165	4-1/8	105	1/2	15	14	6
1-1/2	40	6-5/16	160	6-1/2	165	4-1/8	105	1/2	15	14	6
2	50	8-1/4	210	7-7/8	200	4-3/4	121	3/4	20	27	12
2-1/2	65	9-5/8	245	8-3/4	222	4	102	1	25	34	15
3	80	11-1/4	286	11-3/8	289	5-7/8	149	1	25	60	27

Certified dimensional drawings are available upon request.
†This table reflects only the nearest metric equivalents.

FLOW COEFFICIENTS

Size	C_v	Size	C_v	Size	C_v
3/8"	19.9	1"	19.9	2"	55.7
1/2"	19.9	1-1/4"	35.4	2-1/2"	88.5
3/4"	19.9	1-1/2"	35.4	3"	123.3

TOTAL SCREEN AREA

Size	(in^2)	Size	(in^2)	Size	(in^2)
3/8"	11.72	1"	19.17	2"	64.36
1/2"	11.72	1-1/4"	41.65	2-1/2"	67.60
3/4"	11.72	1-1/2"	41.65	3"	128.17

*See DETERMINING RATIOS on page S5 of the Strainer Information Section for calculating NET FREE AREA of the screen to inside pipe area.

KECKLEY

TECHNICAL DATA
DIMENSIONS AND WEIGHTS

Styles SGFV-C9 & SGFV-KC9

Basket Strainer, Flanged
Cast Chrome-Moly (ASTM A 217, Grade WC9)

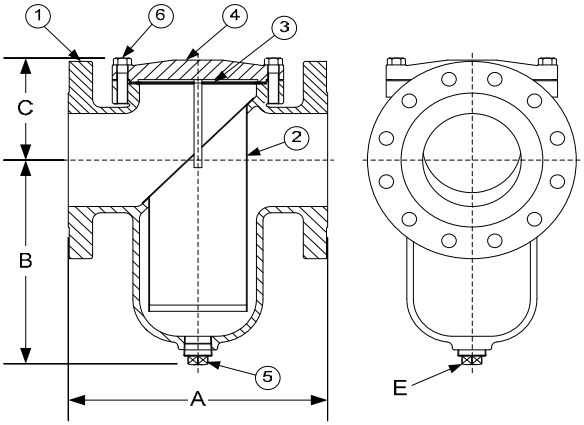

Style SSGFV -Bolted Cover (Shown Above)
Available in 150 lb. and 300 lb. Class

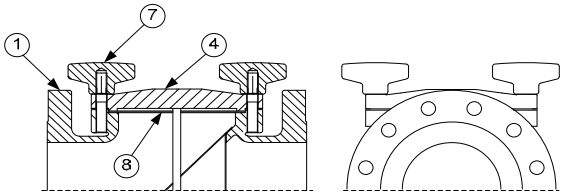

Style SSGFV-K -Knob Type Cover (Shown Above)
Only Available in 150 lb. Class

PARTS LIST		
ITEM	DESCRIPTION	MATERIAL
1†	BODY	CHROME-MOLY (ASTM A 217, GRADE WC9)
2	BASKET	STAINLESS STEEL (304)
3	GASKET	SPIRAL WOUND STAINLESS STEEL (304)
4	COVER	CHROME-MOLY (ASTM A 217, GRADE WC9)
5	PIPE PLUG	STAINLESS STEEL (316)
6	HEX HEAD CAP SCREW	STAINLESS STEEL (316)
7*	KNOB	STAINLESS STEEL
8*	GASKET	VITON (MAX TEMPERATURE 400°F)

*Denotes parts for the Style SSGFV-K 150 lb. Class only.
†Optional Body Materials Available in 304 and 400 Series SS, Hastelloy C276, Inconel, Alloy 20, and Stellite.

STANDARD SCREENS SUPPLIED

SIZE		SCREEN GAGE	SCREEN PERFORATION					
			FOR STEAM		OPEN AREA	FOR LIQUID		OPEN AREA
in	mm		in	mm		in	mm	
1-1/2 to 3	40 to 80	22	3/64	1.2	33%	1/16	1.6	30%
4 to 14	100 to 350	22	1/16	1.6	30%	1/8	3.2	43%

Standard screens supplied are for **liquid service**, unless otherwise specified.
Options: Other perforations, meshes, and screen materials are available.

SIZE		DIMENSIONS															
		A				B				C				E			
		150#		300#		150#		300#		150#		300#		150#		300#	
in	mm	in	mm	in	mm	in	mm	in	mm	in	mm	in	mm	in	mm	in	mm
1-1/2	40	6-1/2	165	7	178	4-1/2	114	4	102	4	102	3-3/4	95	1/2	15	1/2	15
2	50	8-1/2	216	8-13/16	224	5-7/8	149	4-3/4	121	4-3/4	121	3-3/4	95	1/2	15	1	25
2-1/2	65	8	203	9	229	5-7/16	138	5-5/8	143	4-1/4	108	4-5/8	117	3/4	20	1	25
3	80	8-3/4	222	10-1/16	256	5-11/16	144	5-11/16	144	5-5/8	143	5-5/8	143	3/4	20	3/4	20
4	100	11-3/16	284	12	305	8-1/4	210	8-1/4	210	6-1/16	154	6-1/16	154	1	25	1	25
5	125	12-1/4	311	13-1/8	333	10-1/4	260	10-1/4	260	5-5/8	143	5-5/8	143	1	25	1	25
6	150	13-7/8	352	15-9/16	395	12-13/64	310	12-13/64	310	6-5/16	160	6-5/16	160	1-1/4	32	1-1/4	32
8	200	17-3/8	441	18-7/8	479	15-9/16	395	15-9/16	395	8-3/16	208	8-3/16	208	1-1/2	40	1-1/2	40
10	250	22	559	21-5/16	541	16	406	14-3/8	365	10-3/8	264	9-7/8	251	1-1/2	40	2	50
12	300	25	635	25-3/8	645	23-3/4	603	23-3/4	603	12-3/8	314	12-3/8	314	2	50	2	50
14	350	34-5/16	871	34-5/16	871	28	711	34-3/8	873	16-1/2	419	20-3/16	513	2	50	2	50

Larger sizes available upon request.
Certified dimensional drawings are available upon request.

WEIGHTS												
Size		1-1/2"	2"	2-1/2"	3"	4"	5"	6"	8"	10"	12"	14"
150	lbs	22	30	35	39	69	110	125	270	360	450	1550
	kgs	10	14	16	18	31	50	57	122	163	204	703
300	Lbs	24	32	42	56	88	126	150	295	420	500	1650
	kgs	11	15	19	25	40	57	68	134	191	227	748

FLOW COEFFICIENTS

Size	C_v	Size	C_v	Size	C_v	Size	C_v
1-1/2"	32	3"	120.2	6"	743.1	12"	4980.6
2"	42.7	4"	276.7	8"	1486.3	14"	7600.0
2-1/2"	84	5"	442.7	10"	3051.6		

TOTAL SCREEN AREA (150 LB.)

Size	(in^2)	Size	(in^2)	Size	(in^2)	Size	(in^2)
1-1/2"	20.10	3"	54.53	6"	215.65	12"	1040.63
2"	53.42	4"	117.94	8"	401.76	14"	1200.0
2-1/2"	45.72	5"	129.0	10"	591.73		

*See DETERMINING RATIOS on page S5 of the Strainer Information Section for calculating NET FREE AREA of the screen to inside pipe area.

KECKLEY

TECHNICAL DATA
DIMENSIONS AND WEIGHTS

Style SSD-T7& SSD-KT7

Basket Strainer, Threaded
Cast Titanium (ASTM B 37, Grade PD7B)

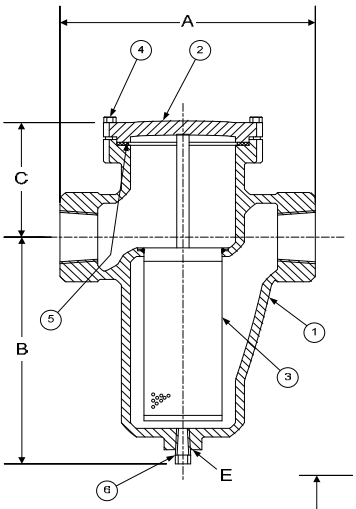

Style SSD -Bolted Cover
(Shown Above)
300 lb. Class

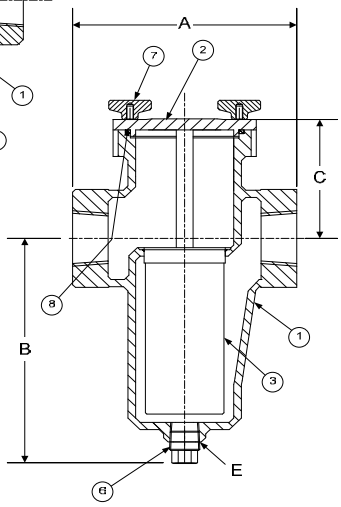

Style SSD-K -Knob Type Cover
(Shown Above)
Only Available in 150 lb. Class

PARTS LIST		
ITEM	DESCRIPTION	MATERIAL
1†	BODY	TITANIUM (ASTM B 37, GRADE PD7B)
2	COVER	TITANIUM (ASTM B 37, GRADE PD7B)
3	BASKET	STAINLESS STEEL (304)
4	HEX HEAD CAP SCREW	STAINLESS STEEL
5	GASKET	SPIRAL WOUND STAINLESS STEEL (304)
6	PLUG	STAINLESS STEEL (316)
7*	KNOB	STAINLESS STEEL (ASTM A 351, GRADE CF8M)
8*	O-RING	VITON (MAX TEMPERATURE 350°F)

*Denotes parts for the Style SSD-K 150 lb. class only.
†Optional Body Materials Available in 304 and 400 Series SS, Alloy 20, Inconel, Hastelloy C276, and Stellite.

STANDARD SCREENS SUPPLIED

SIZE		SCREEN GAGE	SCREEN PERFORATION					
			FOR STEAM		OPEN AREA	FOR LIQUID		OPEN AREA
in	mm		in	mm		in	mm	
3/8 to 2	10 to 50	28	1/32	.8	29%	1/16	1.6	30%
2-1/2 to 3	65 to 80	26	3/64	1.2	33%	1/16	1.6	30%

Standard screens supplied are for **liquid service**, unless otherwise specified.
Options: Other perforations, meshes, and screen materials are available.

SIZE		DIMENSIONS								WEIGHTS	
		A		B		C		E			
in	mm	in	mm	in	mm	in	mm	in	mm	lbs	kgs
3/8	10	4-9/16	116	4	102	3-1/8	79	3/8	10	6	3
1/2	15	4-9/16	116	4	102	3-1/8	79	3/8	10	6	3
3/4	20	4-9/16	116	4	102	3-1/8	79	3/8	10	6	3
1	25	5-5/16	135	4-7/8	124	3	76	3/8	10	9	4
1-1/4	32	6-5/16	160	6-1/2	165	4-1/8	105	1/2	15	14	6
1-1/2	40	6-5/16	160	6-1/2	165	4-1/8	105	1/2	15	14	6
2	50	8-1/4	210	7-7/8	200	4-3/4	121	3/4	20	27	12
2-1/2	65	9-5/8	245	8-3/4	222	4	102	1	25	34	15
3	80	11-1/4	286	11-3/8	289	5-7/8	149	1	25	60	27

Certified dimensional drawings are available upon request.
†This table reflects only the nearest metric equivalents.

FLOW COEFFICIENTS

Size	C_v	Size	C_v	Size	C_v
3/8"	19.9	1"	19.9	2"	55.7
1/2"	19.9	1-1/4"	35.4	2-1/2"	88.5
3/4"	19.9	1-1/2"	35.4	3"	123.3

TOTAL SCREEN AREA

Size	(in^2)	Size	(in^2)	Size	(in^2)
3/8"	11.72	1"	19.17	2"	64.36
1/2"	11.72	1-1/4"	41.65	2-1/2"	67.60
3/4"	11.72	1-1/2"	41.65	3"	128.17

*See DETERMINING RATIOS on page S5 of the Strainer Information Section for calculating NET FREE AREA of the screen to inside pipe area.

KECKLEY

TECHNICAL DATA
DIMENSIONS AND WEIGHTS

Styles SSGFV-T7 & SSGFV-KT7

Basket Strainer, Flanged
Cast Titanium (ASTM B 37, Grade PD7B)

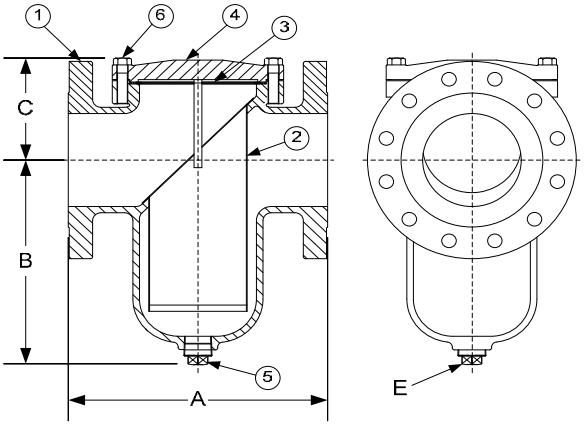

Style SSGFV -Bolted Cover (Shown Above)
Available in 150 lb. and 300 lb. Class

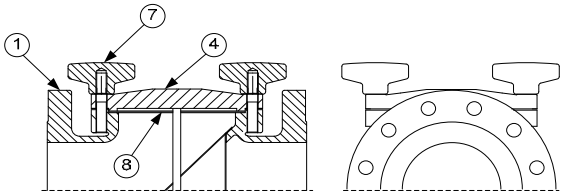

Style SSGFV-K -Knob Type Cover (Shown Above)
Only Available in 150 lb. Class

PARTS LIST		
ITEM	DESCRIPTION	MATERIAL
1†	BODY	TITANIUM (ASTM B 37, GRADE PD7B)
2	BASKET	STAINLESS STEEL (304)
3	GASKET	SPIRAL WOUND STAINLESS STEEL (304)
4	COVER	TITANIUM (ASTM B 37, GRADE PD7B)
5	PIPE PLUG	STAINLESS STEEL (316)
6	HEX HEAD CAP SCREW	STAINLESS STEEL (316)
7*	KNOB	STAINLESS STEEL
8*	GASKET	VITON (MAX TEMPERATURE 400°F)

*Denotes parts for the Style SSGFV-K 150 lb. Class only.
†Optional Body Materials Available in 304 and 400 Series SS, Hastelloy C276, Inconel, Alloy 20, and Stellite.

STANDARD SCREENS SUPPLIED

SIZE		SCREEN GAGE	SCREEN PERFORATION					
			FOR STEAM		OPEN AREA	FOR LIQUID		OPEN AREA
in	mm		in	mm		in	mm	
1-1/2 to 3	40 to 80	22	3/64	1.2	33%	1/16	1.6	30%
4 to 14	100 to 350	22	1/16	1.6	30%	1/8	3.2	43%

Standard screens supplied are for **liquid service**, unless otherwise specified.
Options: Other perforations, meshes, and screen materials are available.

SIZE		DIMENSIONS															
		A				B				C				E			
		150#		300#		150#		300#		150#		300#		150#		300#	
in	mm	in	mm	in	mm	in	mm	in	mm	in	mm	in	mm	in	mm	in	mm
1-1/2	40	6-1/2	165	7	178	4-1/2	114	4	102	4	102	3-3/4	95	1/2	15	1/2	15
2	50	8-1/2	216	8-13/16	224	5-7/8	149	4-3/4	121	4-3/4	121	3-3/4	95	1/2	15	1	25
2-1/2	65	8	203	9	229	5-7/16	138	5-5/8	143	4-1/4	108	4-5/8	117	3/4	20	1	25
3	80	8-3/4	222	10-1/16	256	5-11/16	144	5-11/16	144	5-5/8	143	5-5/8	143	3/4	20	3/4	20
4	100	11-3/16	284	12	305	8-1/4	210	8-1/4	210	6-1/16	154	6-1/16	154	1	25	1	25
5	125	12-1/4	311	13-1/8	333	10-1/4	260	10-1/4	260	5-5/8	143	5-5/8	143	1	25	1	25
6	150	13-7/8	352	15-9/16	395	12-13/64	310	12-13/64	310	6-5/16	160	6-5/16	160	1-1/4	32	1-1/4	32
8	200	17-3/8	441	18-7/8	479	15-9/16	395	15-9/16	395	8-3/16	208	8-3/16	208	1-1/2	40	1-1/2	40
10	250	22	559	21-5/16	541	16	406	14-3/8	365	10-3/8	264	9-7/8	251	1-1/2	40	2	50
12	300	25	635	25-3/8	645	23-3/4	603	23-3/4	603	12-3/8	314	12-3/8	314	2	50	2	50
14	350	34-5/16	871	34-5/16	871	28	711	34-3/8	873	16-1/2	419	20-3/16	513	2	50	2	50

Larger sizes available upon request.
Certified dimensional drawings are available upon request.

WEIGHTS												
Size		1-1/2"	2"	2-1/2"	3"	4"	5"	6"	8"	10"	12"	14"
150	lbs	22	30	35	39	69	110	125	270	360	450	1550
	kgs	10	14	16	18	31	50	57	122	163	204	703
300	Lbs	24	32	42	56	88	126	150	295	420	500	1650
	kgs	11	15	19	25	40	57	68	134	191	227	748

FLOW COEFFICIENTS

Size	C_v	Size	C_v	Size	C_v	Size	C_v
1-1/2"	32	3"	120.2	6"	743.1	12"	4980.6
2"	42.7	4"	276.7	8"	1486.3	14"	7600.0
2-1/2"	84	5"	442.7	10"	3051.6		

TOTAL SCREEN AREA (150 LB.)

Size	(in^2)	Size	(in^2)	Size	(in^2)	Size	(in^2)
1-1/2"	20.10	3"	54.53	6"	215.65	12"	1040.63
2"	53.42	4"	117.94	8"	401.76	14"	1200.0
2-1/2"	45.72	5"	129.0	10"	591.73		

*See DETERMINING RATIOS on page S5 of the Strainer Information Section for calculating NET FREE AREA of the screen to inside pipe area.

KECKLEY

TECHNICAL DATA
DIMENSIONS AND WEIGHTS

Style SSD-DP & SSD-KDP

Basket Strainer, Threaded
Duplex (ASTM A 351, Grade CD4MCu)

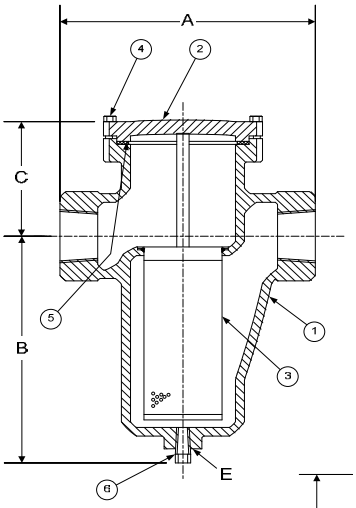

Style SSD -Bolted Cover
(Shown Above)
300 lb. Class

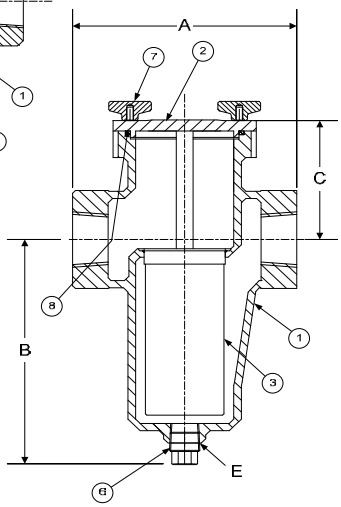

Style SSD-K -Knob Type Cover
(Shown Above)
Only Available in 150 lb. Class

PARTS LIST		
ITEM	DESCRIPTION	MATERIAL
1†	BODY	DUPLEX (ASTM A 351, GRADE CD4MCu)
2	COVER	DUPLEX (ASTM A 351, GRADE CD4MCu)
3	BASKET	STAINLESS STEEL (304)
4	HEX HEAD CAP SCREW	STAINLESS STEEL
5	GASKET	SPIRAL WOUND STAINLESS STEEL (304)
6	PLUG	STAINLESS STEEL (316)
7*	KNOB	STAINLESS STEEL (ASTM A 351, GRADE CF8M)
8*	O-RING	VITON (MAX TEMPERATURE 350°F)

*Denotes parts for the Style SSD-K 150 lb. class only.
†Optional Body Materials Available in 304 and 400 Series SS, Hastelloy C276, Inconel, Monel and Stellite.

STANDARD SCREENS SUPPLIED

SIZE		SCREEN GAGE	SCREEN PERFORATION					
			FOR STEAM		OPEN AREA	FOR LIQUID		OPEN AREA
in	mm		in	mm		in	mm	
3/8 to 2	10 to 50	28	1/32	.8	29%	1/16	1.6	30%
2-1/2 to 3	65 to 80	26	3/64	1.2	33%	1/16	1.6	30%

Standard screens supplied are for **liquid service**, unless otherwise specified.
Options: Other perforations, meshes, and screen materials are available.

SIZE		DIMENSIONS								WEIGHTS	
		A		B		C		E			
in	mm	in	mm	in	mm	in	mm	in	mm	lbs	kgs
3/8	10	4-9/16	116	4	102	3-1/8	79	3/8	10	6	3
1/2	15	4-9/16	116	4	102	3-1/8	79	3/8	10	6	3
3/4	20	4-9/16	116	4	102	3-1/8	79	3/8	10	6	3
1	25	5-5/16	135	4-7/8	124	3	76	3/8	10	9	4
1-1/4	32	6-5/16	160	6-1/2	165	4-1/8	105	1/2	15	14	6
1-1/2	40	6-5/16	160	6-1/2	165	4-1/8	105	1/2	15	14	6
2	50	8-1/4	210	7-7/8	200	4-3/4	121	3/4	20	27	12
2-1/2	65	9-5/8	245	8-3/4	222	4	102	1	25	34	15
3	80	11-1/4	286	11-3/8	289	5-7/8	149	1	25	60	27

Certified dimensional drawings are available upon request.
†This table reflects only the nearest metric equivalents.

FLOW COEFFICIENTS

Size	C_v	Size	C_v	Size	C_v
3/8"	19.9	1"	19.9	2"	55.7
1/2"	19.9	1-1/4"	35.4	2-1/2"	88.5
3/4"	19.9	1-1/2"	35.4	3"	123.3

TOTAL SCREEN AREA

Size	(in^2)	Size	(in^2)	Size	(in^2)
3/8"	11.72	1"	19.17	2"	64.36
1/2"	11.72	1-1/4"	41.65	2-1/2"	67.60
3/4"	11.72	1-1/2"	41.65	3"	128.17

*See DETERMINING RATIOS on page S5 of the Strainer Information Section for calculating NET FREE AREA of the screen to inside pipe area.

KECKLEY

TECHNICAL DATA
DIMENSIONS AND WEIGHTS

Styles SSGFV-DP & SSGFV-KDP

Basket Strainer, Flanged
Duplex (ASTM A 351, Grade CD4MCu)

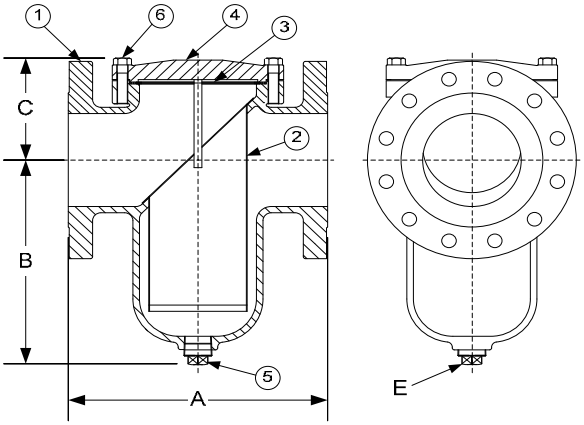

Style SSGFV -Bolted Cover (Shown Above)
Available in 150 lb. and 300 lb. Class

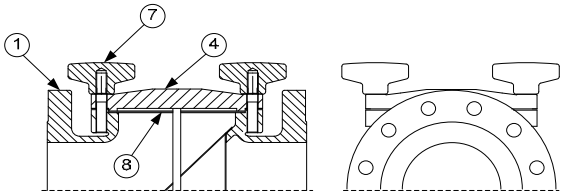

Style SSGFV-K -Knob Type Cover (Shown Above)
Only Available in 150 lb. Class

PARTS LIST		
ITEM	DESCRIPTION	MATERIAL
1†	BODY	DUPLEX (ASTM A 351, GRADE CD4MCu)
2	BASKET	STAINLESS STEEL (304)
3	GASKET	SPIRAL WOUND STAINLESS STEEL (304)
4	COVER	DUPLEX (ASTM A 351, GRADE CD4MCu)
5	PIPE PLUG	STAINLESS STEEL (316)
6	HEX HEAD CAP SCREW	STAINLESS STEEL (316)
7*	KNOB	STAINLESS STEEL
8*	GASKET	VITON (MAX TEMPERATURE 400°F)

*Denotes parts for the Style SSGFV-K 150 lb. Class only.
†Optional Body Materials Available in 304 and 400 Series SS, Hastelloy, Inconel, Monel and Stellite.

STANDARD SCREENS SUPPLIED

SIZE		SCREEN GAGE	SCREEN PERFORATION					
			FOR STEAM		OPEN AREA	FOR LIQUID		OPEN AREA
in	mm		in	mm		in	mm	
1-1/2 to 3	40 to 80	22	3/64	1.2	33%	1/16	1.6	30%
4 to 14	100 to 350	22	1/16	1.6	30%	1/8	3.2	43%

Standard screens supplied are for **liquid service**, unless otherwise specified.
Options: Other perforations, meshes, and screen materials are available.

SIZE		DIMENSIONS															
		A				B				C				E			
		150#		300#		150#		300#		150#		300#		150#		300#	
in	mm	in	mm	in	mm	in	mm	in	mm	in	mm	in	mm	in	mm	in	mm
1-1/2	40	6-1/2	165	7	178	4-1/2	114	4	102	4	102	3-3/4	95	1/2	15	1/2	15
2	50	8-1/2	216	8-13/16	224	5-7/8	149	4-3/4	121	4-3/4	121	3-3/4	95	1/2	15	1	25
2-1/2	65	8	203	9	229	5-7/16	138	5-5/8	143	4-1/4	108	4-5/8	117	3/4	20	1	25
3	80	8-3/4	222	10-1/16	256	5-11/16	144	5-11/16	144	5-5/8	143	5-5/8	143	3/4	20	3/4	20
4	100	11-3/16	284	12	305	8-1/4	210	8-1/4	210	6-1/16	154	6-1/16	154	1	25	1	25
5	125	12-1/4	311	13-1/8	333	10-1/4	260	10-1/4	260	5-5/8	143	5-5/8	143	1	25	1	25
6	150	13-7/8	352	15-9/16	395	12-13/64	310	12-13/64	310	6-5/16	160	6-5/16	160	1-1/4	32	1-1/4	32
8	200	17-3/8	441	18-7/8	479	15-9/16	395	15-9/16	395	8-3/16	208	8-3/16	208	1-1/2	40	1-1/2	40
10	250	22	559	21-5/16	541	16	406	14-3/8	365	10-3/8	264	9-7/8	251	1-1/2	40	2	50
12	300	25	635	25-3/8	645	23-3/4	603	23-3/4	603	12-3/8	314	12-3/8	314	2	50	2	50
14	350	34-5/16	871	34-5/16	871	28	711	34-3/8	873	16-1/2	419	20-3/16	513	2	50	2	50

Larger sizes available upon request.
Certified dimensional drawings are available upon request.

WEIGHTS												
Size		1-1/2"	2"	2-1/2"	3"	4"	5"	6"	8"	10"	12"	14"
150	lbs	22	30	35	39	69	110	125	270	360	450	1550
	kgs	10	14	16	18	31	50	57	122	163	204	703
300	Lbs	24	32	42	56	88	126	150	295	420	500	1650
	kgs	11	15	19	25	40	57	68	134	191	227	748

FLOW COEFFICIENTS

Size	C_v	Size	C_v	Size	C_v	Size	C_v
1-1/2"	32	3"	120.2	6"	743.1	12"	4980.6
2"	42.7	4"	276.7	8"	1486.3	14"	7600.0
2-1/2"	84	5"	442.7	10"	3051.6		

TOTAL SCREEN AREA (150 LB.)

Size	(in^2)	Size	(in^2)	Size	(in^2)	Size	(in^2)
1-1/2"	20.10	3"	54.53	6"	215.65	12"	1040.63
2"	53.42	4"	117.94	8"	401.76	14"	1200.0
2-1/2"	45.72	5"	129.0	10"	591.73		

*See DETERMINING RATIOS on page S5 of the Strainer Information Section for calculating NET FREE AREA of the screen to inside pipe area.

KECKLEY

PRESSURE DROP CHART

Basket Strainers (Styles SD, SD-K, SSD, and SSD-K)

This pressure drop chart is based on the flow of clean water through the Keckley Strainer Styles listed above with screen perforations ranging from 3/64" through 1/8".

TO USE CHARTS:

Find your desired rate of flow (GPM) on the left hand side of the chart. Follow its corresponding horizontal line to the point where it intersects the diagonal line indicating the strainer pipe size. From this point of intersection, follow the vertical line down to the bottom of the chart to determine the approximate pressure drop.

CORRECTION FACTORS:

For finer mesh screens that are backed with a perforated sheet, multiply the pressure drops shown at right by the following:

40 mesh	x 1.2
60 mesh	x 1.4
80 mesh	x 1.6
100 mesh	x 1.7

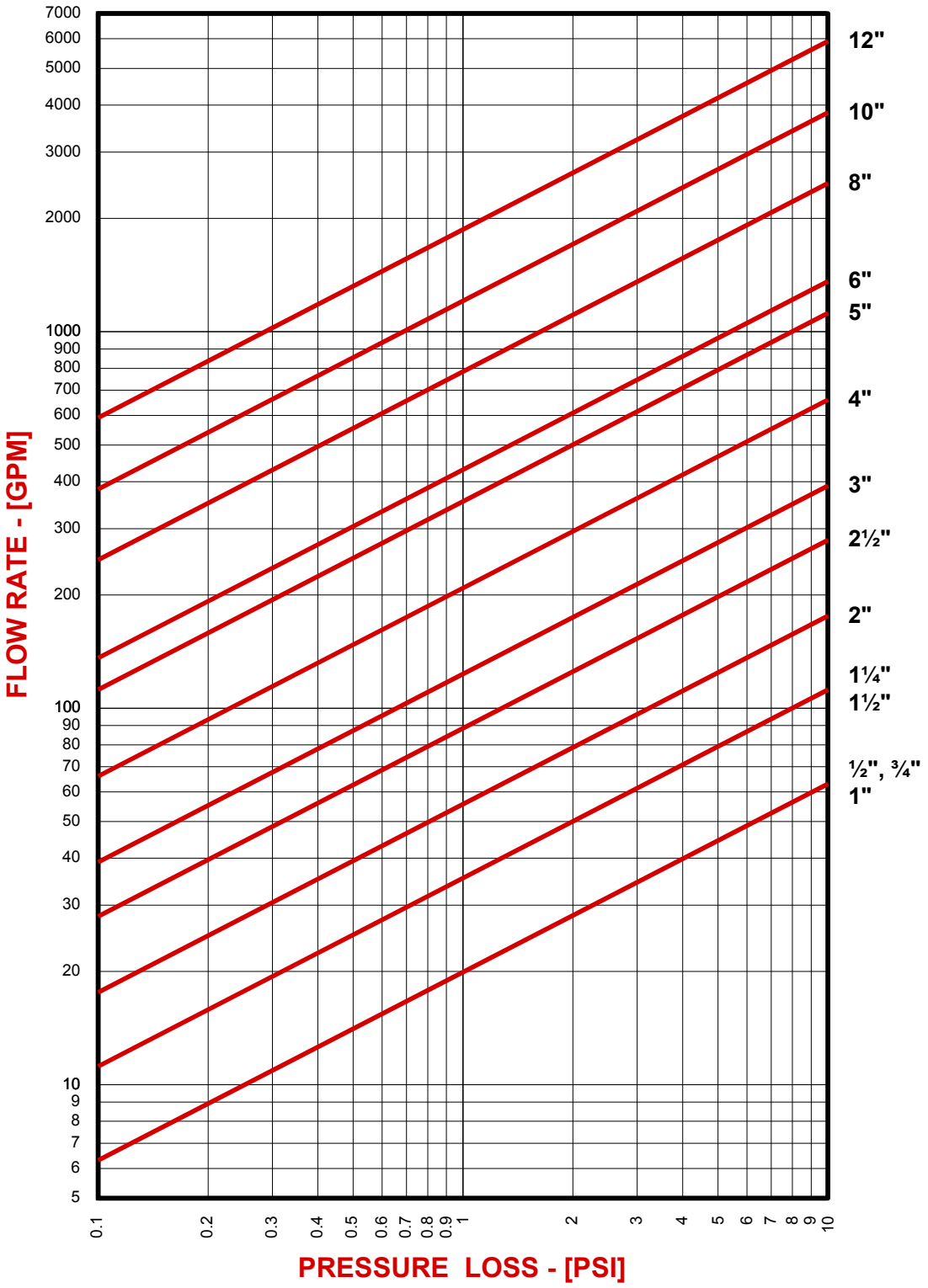

KECKLEY

PRESSURE DROP CHART

Basket Strainers (Styles SGFV, SGFV-K, SSGFV, and SSGFV-K)

This pressure drop chart is based on the flow of clean water through the Keckley Strainer Styles listed above with screen perforations ranging from 1/16" through 1/8".

TO USE CHARTS:

Find your desired rate of flow (GPM) on the left hand side of the chart. Follow its corresponding horizontal line to the point where it intersects the diagonal line indicating the strainer pipe size. From this point of intersection, follow the vertical line down to the bottom of the chart to determine the approximate pressure drop.

CORRECTION FACTORS:

For finer mesh screens that are backed with a perforated sheet, multiply the pressure drops shown at right by the following:

40 mesh	x 1.2
60 mesh	x 1.4
80 mesh	x 1.6
100 mesh	x 1.7

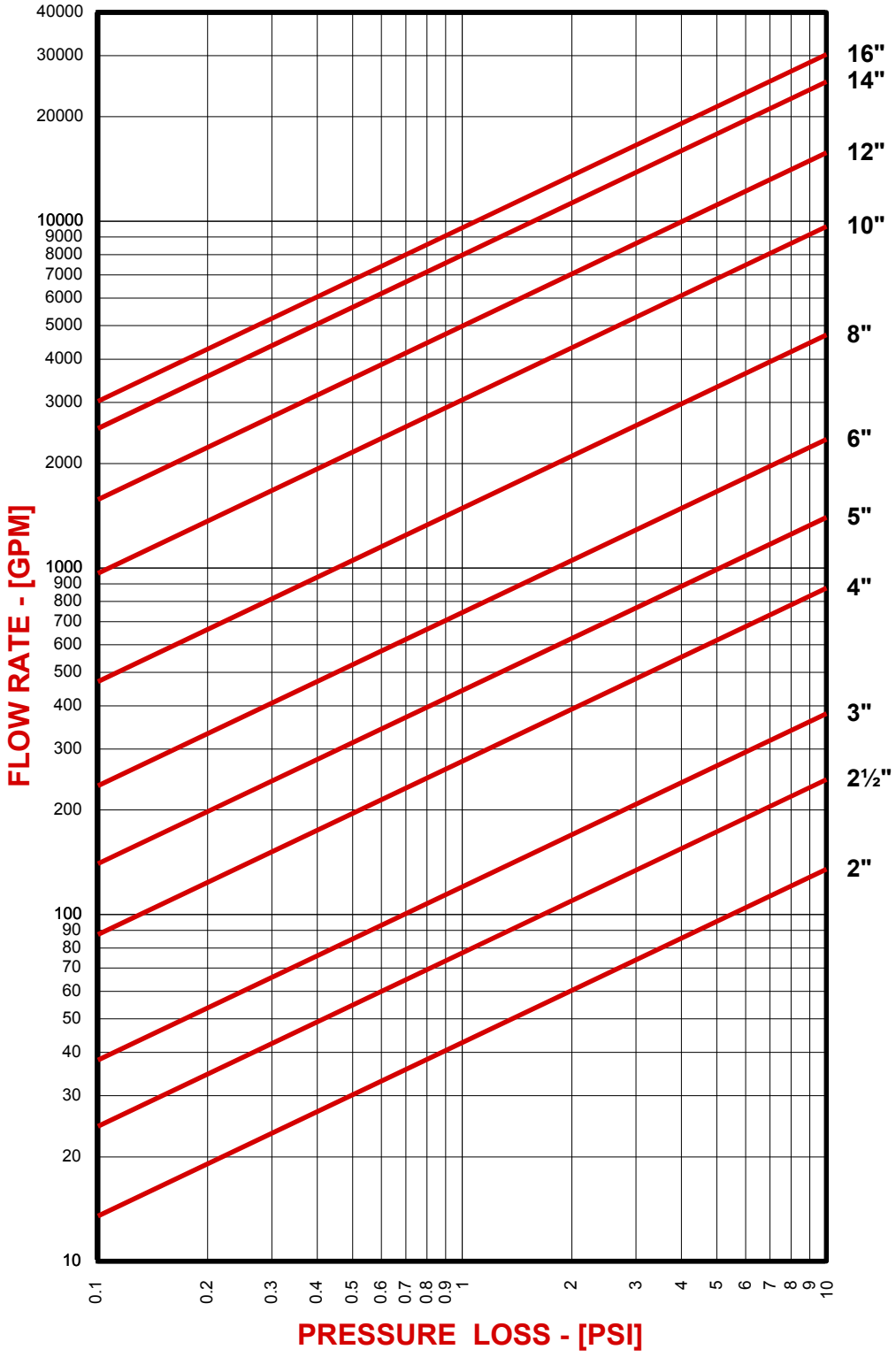

KECKLEY

BULLETIN NO. 9400-5

DUPLEX STRAINERS

800-KECKLEY (800-532-5539)

847/674-8422
FAX: 847/674-2106
E-MAIL: SALES@KECKLEY.COM
WEB SITE: WWW.KECKLEY.COM

NO QUESTION. WE HAVE THE ANSWERS.

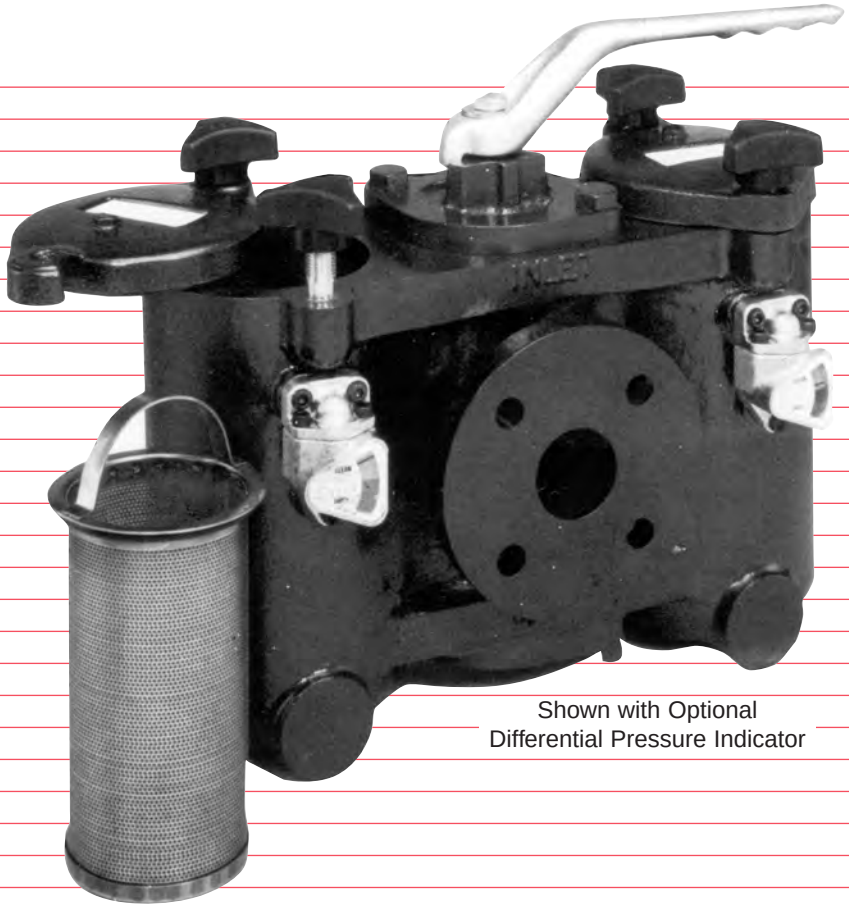

Shown with Optional
Differential Pressure Indicator

KECKLEY COMPANY • 3400 Cleveland Street • P.O. Box 67 • Skokie, Illinois 60076

DUPLEX STRAINERS

STYLE Screwed (NPT) ¾" to 2½"	**DPXS**	**WDPXS**	**CDPXS**
STYLE Flanged (ANSI) 1" to 8"	**DPXF 125lb.**	**WDPXF 125lb.**	**CDPXF 125lb.**
Body & Cover	Cast Iron	Cast Iron	Cast Iron
	ASTM A 126 Class B	ASTM A 126 Class B	ASTM A 126 Class B
Diverter Valve	Bronze	Iron	Stainless Steel*
Sleeve	Bronze	No Sleeve	No Sleeve
Drive Shaft & Spindle	Stainless Steel	Mild Steel	Stainless Steel
Basket Screens	Stainless Steel	Stainless Steel	Stainless Steel
Drain Plugs	Brass	Brass	Stainless Steel
Seals, Standard	Nitrile	Nitrile	Nitrile
	-31°F to +248°F	-31°F to +248°F	-31°F to +248°F
Maximum Non-Shock	200 PSIG at 150°F	200 PSIG at 150°F	200 PSIG at 120°F
Water, Oil, Gas			
Not Recommended For Steam			
Maximum Temperature	+302°F	+392°F	+120°F
with Optional Seal			

Larger sizes available upon request.

*Nickel / Teflon (PTFE) Coated

AVAILABLE OPTIONS FOR ALL STYLES

DIFFERENTIAL PRESSURE INDICATORS - Mounts directly to the strainer body and visually indicates when the baskets require cleaning. Preset at a differential pressure of 10 PSI with an option for settings of 5 and 15 PSI.

DIN ELECTRICAL PROBES - For use with the above differential pressure indicator. Provides an electrical signal when the pre-set maximum differential pressure is reached.

BASKETS - Screens available in sizes ranging from 300 mesh to 1/4" perforations.

MAGNETIC INSERTS - Mounted to the strainer baskets to collect metallic particles.

100% SHUT-OFF - Achieved through the use of special seals within the change-over mechanism to eliminate leakage between chambers.

AIR ELIMINATORS - Automatically vents air from basket chambers. (ex. After basket cleaning).

DUPLEX STRAINERS

STYLE Screwed (NPT) ¾" to 2½"	**BDPXS**	**SDPXS**	**SCDPXS**	**SSDPXS**
STYLE Flanged (ANSI) 1" to 8"	**BDPXS 150lb.**	**SDPXS 150lb.**	**SCDPXS 150lb.**	**SSDPXS 150lb.**
Body & Cover	Cast Bronze	Cast Carbon Steel	Cast Carbon Steel	Cast Stainless Steel
	ASTM B62	ASTM A 216 WCB	ASTM A 216 WCB	316 ASTM A 351 CF8M
Diverter Valve	Bronze	Bronze	Stainless Steel*	Stainless Steel*
Sleeve	No Sleeve	Bronze	No Sleeve	No Sleeve
Drive Shaft & Spindle	Phosphor Bronze	Stainless Steel	Stainless Steel	Stainless Steel
Basket Screens	Stainless Steel	Stainless Steel	Stainless Steel	Stainless Steel
Drain Plugs	Phosphor Bronze	Brass	Stainless Steel	Stainless Steel
Seals, Standard	Nitrile	Nitrile	Nitrile	Viton
	-31°F to +248°F	-31°F to +248°F	-31°F to +248°F	-4°F to +392°F
Maximum Non-Shock	225 PSIG at 150°F	285 PSIG at 100°F	285 PSIG at 100°F	275 PSIG at 100°F
Water, Oil, Gas				
Not Recommended For Steam				
Maximum Temperature	+392°F	+302°F	+120°F	+392°F
with Optional Seal				

Larger sizes available upon request.

*Nickel / Teflon (PTFE) Coated

AVAILABLE OPTIONS FOR ALL STYLES

MOUNTING STUDS / BRACKETS - Allowing the strainer to be independently supported.

HEATING JACKETS - Used to maintain the temperature of the process fluid inside the strainer. Mounted permanently to the strainer body allowing a supply of steam or hot water to pass around the body.

PRESSURE EQUALIZING VALVES - Standard on the 5, 6 and 8" strainers, these may be fitted to other sizes upon request.

SPECIAL SEALING MATERIALS - EPDM, Viton. Others upon request.

BODY AND INTERNALS - Available in other material combinations, consult factory.

DUPLEX STRAINERS
Screwed

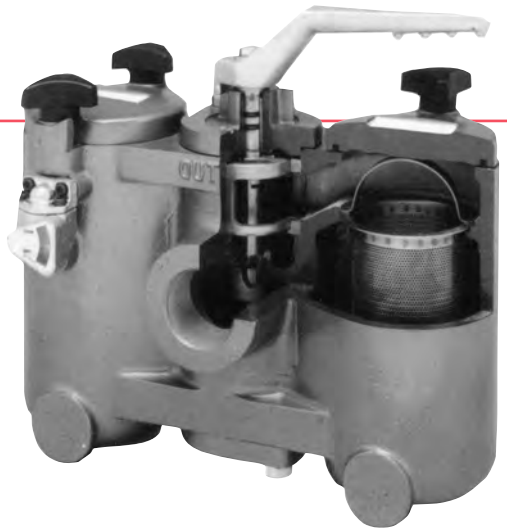

STYLE	BODY	DIVERTER
DPXS	CAST IRON	BRONZE
WDPXS	CAST IRON	IRON
CDPXS	CAST IRON	STAINLESS STEEL
BDPXS	CAST BRONZE	BRONZE
SDPXS	CAST CARBON STEEL	BRONZE
SCDPXS	CAST CARBON STEEL	STAINLESS STEEL
SSDPXS	CAST STAINLESS STEEL	STAINLESS STEEL

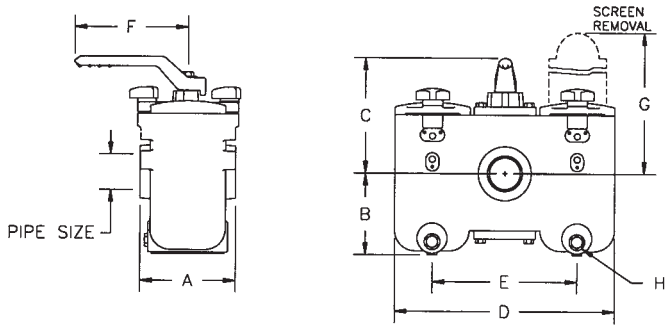

STANDARD SCREENS SUPPLIED

PIPE SIZE	SCREEN PERFORATION	OPEN AREA
¾" to 1½"	1/16"	30%
2", 2½"	⅛"	43%

Options: Other perforations, meshes, and screen materials are available.

WORKING PRESSURE—NON SHOCK

Not recommended for steam service

STYLE DPXS, WDPXS
WATER, OIL, GAS...200 PSI-150°F
BODY AND COVERS: ASTM A 126, CLASS B

STYLE CDPXS
WATER, OIL, GAS...200 PSI-120°F
BODY AND COVERS: ASTM A 126, CLASS B

STYLE BDPXS
WATER, OIL, GAS...225 PSI-150°F
BODY AND COVERS: ASTM B62

STYLE SDPXS, SCDPXS
WATER, OIL, GAS...285 PSI-100°F
BODY AND COVERS: ASTM A 216, GRADE WCB

STYLE SSDPXS
WATER, OIL, GAS...275 PSI-100°F
BODY AND COVERS: Type 316 A 351, GRADE CF8M

APPLICATIONS

Duplex strainers are used in continuous flow applications where the process can not be shut down for cleaning. Examples: lubrication systems, industrial or marine oil burners, chemical plants, cooling lines in power plants, compressors, condensers, and ink supply lines to printing presses. Duplex strainers are also specified for water lines to cooling towers and pumping stations where water is taken from lakes or rivers.

DIMENSIONS & SHIPPING WEIGHTS (APPROXIMATE)

PIPE SIZE	A	B	C	D	E	F	G	H	WEIGHT LBS.	
									IRON BODY	OTHERS
¾"	4¾	4⅛	5⅞	10⅝	6 11/16	6⅞	8 11/16	½	29	35
1"	4¾	4⅛	5⅞	10⅝	6 11/16	6⅞	8 11/16	½	29	35
1¼"	5⅜	5¾	6⅞	11 3/16	7¼	6⅞	12	½	42	51
1½"	5⅜	5¾	6⅞	11 3/16	7¼	6⅞	12	½	42	51
2"	7¼	6⅛	8¾	16¾	11	8¼	13 13/16	½	108	132
2½"	7¼	6⅛	8¾	16¾	11	8¼	13 13/16	½	108	132

Certified Dimensional Sheets Available.

DUPLEX STRAINERS
Flanged

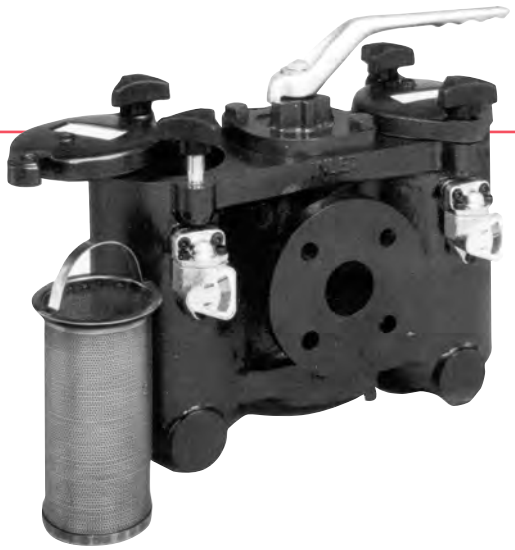

STYLE	BODY	DIVERTER
DPXF	CAST IRON-125 lb.	BRONZE
WDPXF	CAST IRON-125 lb.	IRON
CDPXF	CAST IRON-125 lb.	STAINLESS STEEL
BDPXF	CAST BRONZE-150 lb.	BRONZE
SDPXF	CAST CARBON STEEL-150 lb.	BRONZE
SCDPXF	CAST CARBON STEEL-150 lb.	STAINLESS STEEL
SSDPXF	CAST STAINLESS STEEL-150 lb.	STAINLESS STEEL

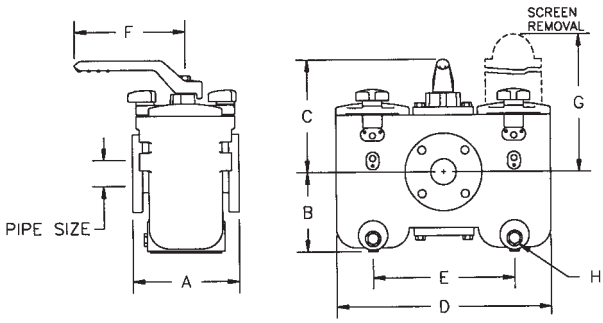

STANDARD SCREENS SUPPLIED

PIPE SIZE	SCREEN PERFORATION	OPEN AREA
1" to 1½"	1/16"	30%
2" to 8"	⅛"	43%

Options: Other perforations, meshes, and screen materials are available.

WORKING PRESSURE—NON SHOCK

Not recommended for steam service

STYLE DPXF, WDPXF
WATER, OIL, GAS...200 PSI-150°F
BODY AND COVERS: ASTM A 126, CLASS B

STYLE CDPXF
WATER, OIL, GAS...200 PSI-120°F
BODY AND COVERS: ASTM A 126, CLASS B

STYLE BDPXF
WATER, OIL, GAS...225 PSI-150°F
BODY AND COVERS: ASTM B62

STYLE SDPXF, SCDPXF
WATER, OIL, GAS...285 PSI-100°F
BODY AND COVERS: ASTM A 216, GRADE WCB

STYLE SSDPXF
WATER, OIL, GAS...275 PSI-100°F
BODY AND COVERS: Type 316 A 351, GRADE CF8M

APPLICATIONS

Duplex strainers are used in continuous flow applications where the process can not be shut down for cleaning. Examples: lubrication systems, industrial or marine oil burners, chemical plants, cooling lines in power plants, compressors, condensers, and ink supply lines to printing presses. Duplex strainers are also specified for water lines to cooling towers, and pumping stations where water is taken from lakes or rivers.

DIMENSIONS & SHIPPING WEIGHTS (APPROXIMATE)

PIPE SIZE	A	B	C	D	E	F	G	H	WEIGHT LBS. IRON BODY	WEIGHT LBS. OTHERS
1"	6	4⅛	5⅞	10⅝	6 11/16	6⅞	8 11/16	½	38	44
1½"	6⅞	5¾	6⅞	11 3/16	7¼	6⅞	12	½	53	62
2"	8¼	6⅛	8¾	16¾	11	8¼	13 13/16	½	117	139
2½"	8¼	6⅛	8¾	16¾	11	8¼	13 13/16	½	119	141
3"	10½	8¼	10 1/16	19¼	13	9⅞	17¾	½	190	225
4"	12½	10 7/16	11 9/16	21¼	15	9⅞	22⅝	½	282	302
* 5"	18⅝	10 9/16	13	23½	16	15	22⅝	½	619	663
* 6"	18⅝	10 9/16	13	23½	16	15	22⅝	½	629	673
8"	22	20½	21 11/16	40⅛	27 9/16	19 11/16	47⅝	½	1632	1985

* 5" AND 6" DUPLEX STRAINERS HAVE A FOUR BASKET DESIGN.

Certified Dimensional Sheets Available.

BASKETS

PERFORATED SHEET METAL

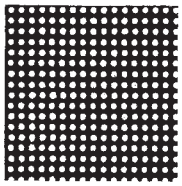

.033 DIA.
1/32" prox.
331 Holes Per Sq. In.

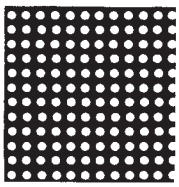

.045 DIA.
3/64" prox.
225 Holes Per Sq. In.

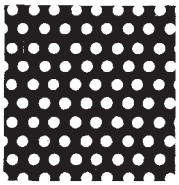

.062 DIA.
1/16" prox.
98 Holes Per Sq. In.

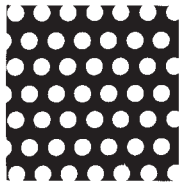

.094 DIA.
3/32" prox.
51 Holes Per Sq. In.

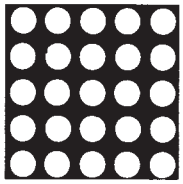

.125 DIA.
1/8" prox.
29 Holes Per Sq. In.

.1875 DIA.
3/16" prox.
18 Holes Per Sq. In.

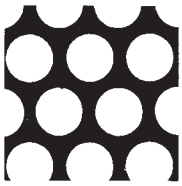

.25 DIA.
1/4" prox.
12 Holes Per Sq. In.

WOVEN METAL WIRE MESH

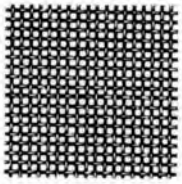

20 MESH
Wire Dia. .016
Opening .0340

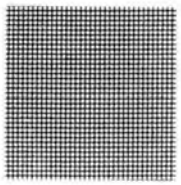

40 MESH
Wire Dia. .010
Opening .0150

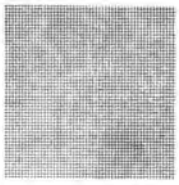

60 MESH
Wire Dia. .0075
Opening .0092

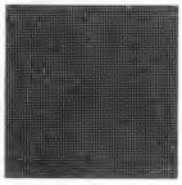

80 MESH
Wire Dia. .0055
Opening .0070

100 MESH
Wire Dia. .0045
Opening .0055

Mesh Size	Microns
20	840
40	420
60	250
80	177
100	149
200	74
300	50

Also available in 30, 50, 150, 200 and 300 Mesh.

WIRE MESH BASKETS REINFORCED WITH PERFORATED MATERIAL AVAILABLE.

MAGNETS

Magnets can be provided as an option which, when placed inside the strainer basket, will remove very fine iron or steel particles present in fluid.

MATERIAL

Stainless steel baskets are standard in all strainers.

DIFFERENTIAL PRESSURE INDICATORS

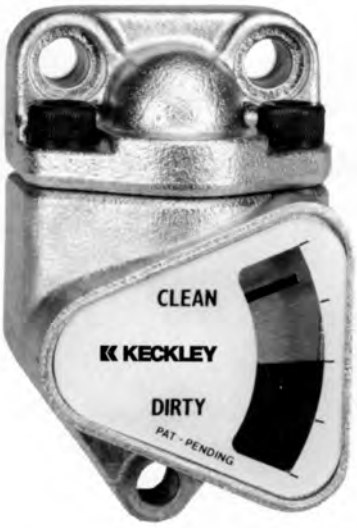

As strainer baskets become clogged with debris, the pressure drop increases. In order to maintain efficient straining and line pressure, it is important that the baskets are cleaned regularly.

The Keckley Differential Pressure Indicator is designed to monitor basket conditions and provide visual warning that cleaning is required.

Available as an option on all duplex strainers, the indicator is mounted directly to the strainer body and indicates the differential pressure across each basket, taking the guesswork out of strainer maintenance.

FEATURES

- Easy to read
- Compact design
- No piping to become clogged
- Positive seal separates clean and dirty liquids
- Remote operation via electrical signal available if required
- Purpose designed for Keckley duplex basket strainers

SPECIFICATIONS

- Anodized aluminum casing and nitrile diaphragm for water and oil applications
- Stainless steel casing, stainless steel internals and viton diaphragm for other liquids
- Indicator preset at 10 PSI. Other spring ratings available on request
- Pointer operated by internal magnet avoiding leakage through seals

RATIOS:
Net Free Area To Pipe Area

STANDARD PERFORATIONS AND WIRE MESH*

STRAINER SIZE (ALL STYLES)	TOTAL SCREEN AREA (SQ. IN.)	INSIDE AREA PIPE (SQ. IN.)	.033	.045	.0625	.094	.125	.1875	.250	20 Mesh	40 Mesh	60 Mesh	80 Mesh	100 Mesh	SIZE
			1/32	3/64	1/16	3/32	1/8	3/16	1/4						
3/4	29	.533	15.78	17.96	16.32	19.59	23.40	27.75	31.56	12.12	8.42	7.14	7.37	8.42	3/4
1	29	.864	9.73	11.08	10.07	12.08	14.43	17.12	19.47	7.48	5.19	4.40	4.55	5.19	1
1 1/4	42	1.496	8.14	9.27	8.42	10.11	12.07	14.32	16.28	6.25	4.35	3.68	3.80	4.35	1 1/4
1 1/2	42	2.036	5.98	6.81	6.19	7.43	8.87	10.52	11.97	4.60	3.20	2.71	2.80	3.14	1 1/2
2	75	3.355	6.48	7.38	6.71	8.05	9.61	11.40	12.97	4.98	3.46	2.93	3.03	3.46	2
2 1/2	75	4.788	4.54	5.17	4.70	5.64	6.74	7.99	9.09	3.49	2.43	2.06	2.12	2.43	2 1/2
3	111	7.393	4.35	4.96	4.50	5.41	6.46	7.66	8.71	3.35	2.33	1.97	2.03	2.33	3
4	150	12.73	3.42	3.89	3.54	4.24	5.07	6.01	6.83	2.62	1.82	1.54	1.60	1.82	4
6	350	28.89	3.51	4.00	3.63	4.36	5.21	6.18	7.03	2.70	1.88	1.59	1.64	1.88	6
8	618	50.00	3.58	4.08	3.71	4.45	5.32	6.30	7.17	2.75	1.91	1.62	1.67	1.91	8
% OPEN AREA			29%	33%	30%	36%	43%	51%	58%	51.8%	36%	30.5%	31.5%	36%	

*Wire mesh screens are reinforced with a 1/8" perforated sheet.

PRESSURE DROP CHART

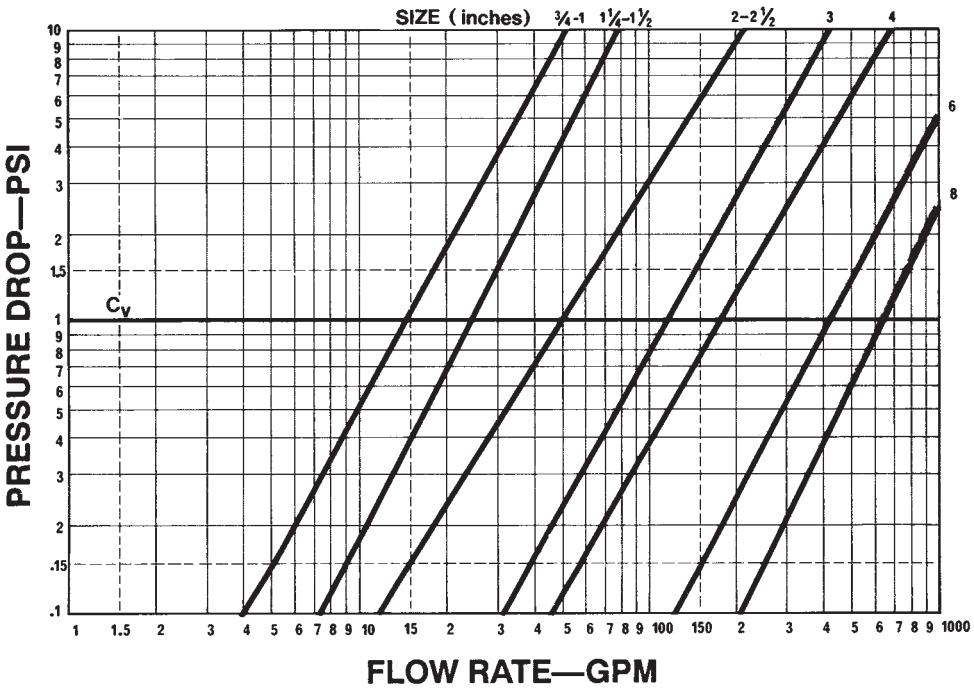

NOTE:

These charts are based on flow of clean water through .125" perforated baskets. For multiplying factors for clogged screens, see page 8.

CORRECTION FACTORS (for mesh lined baskets): Multiply pressure drops shown in chart at left by the following:

40 mesh x 1.2
60 mesh x 1.4
80 mesh x 1.6
100 mesh x 1.7

FLOW DIAGRAM

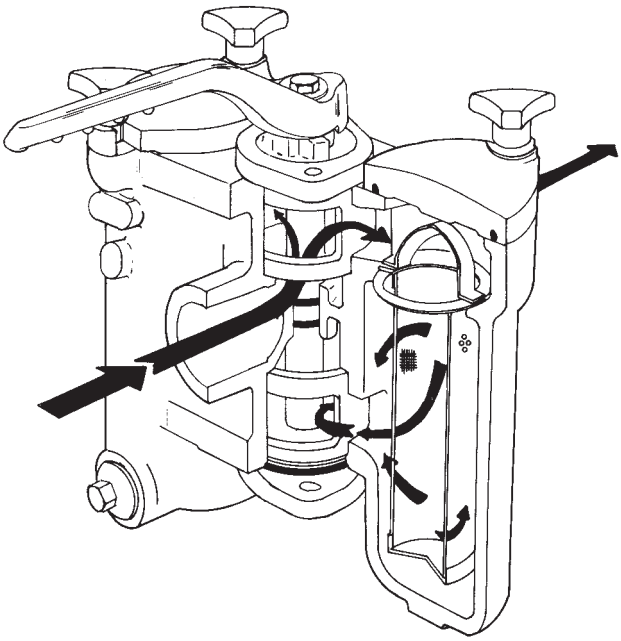

Center position of handle (as shown) allows flow to both chambers

Moving handle to far right or left diverts flow to the chamber UNDER the handle. This allows for removal and cleaning of the basket not in use.

PRESSURE DROP CHART
(CLOGGED SCREENS)

TO USE CHART:

Anticipate the allowable percentage of clogged screen to the left of the chart. Follow that value to the right where it intersects the curve. From that point, extend a line straight down to determine the pressure drop multiplier. For example: If it is anticipated that the screens will become 50% clogged before cleaning, then the pressure drop multiplier would be 2.

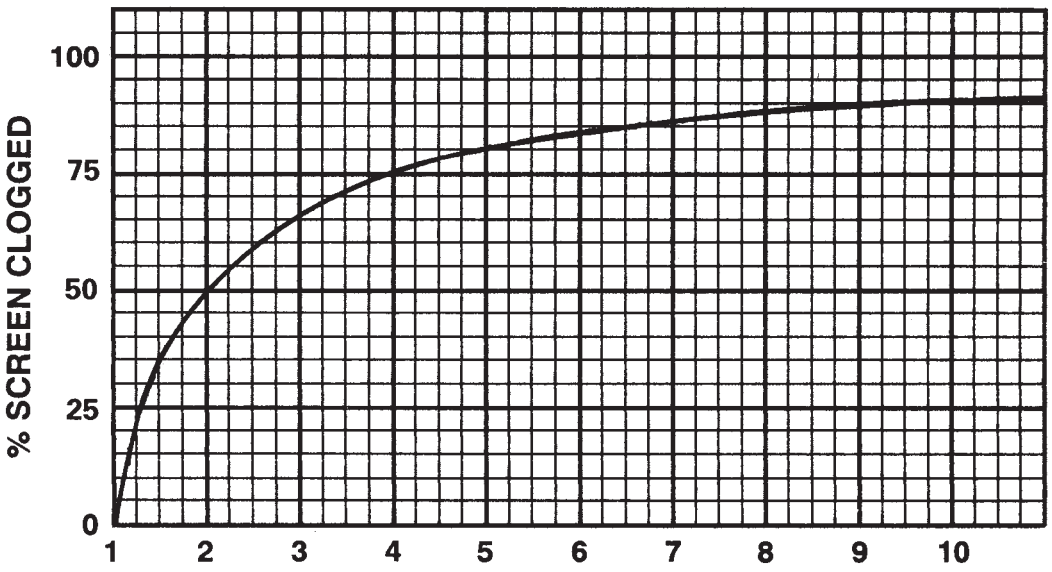

Example:
To determine the pressure drop for a flow rate of 150 GPM through a 4" duplex strainer with 1/8" perforated stainless steel screens that are 50% clogged: First determine the pressure drop for a clean screen from the chart on page 7.

PRESSURE DROP MULTIPLIER:

As described above, the multiplying factor for a 50% clogged screen is 2. It can now be determined that the pressure drop would be .8 PSI x 2 = 1.6 PSI.

PARTS LIST

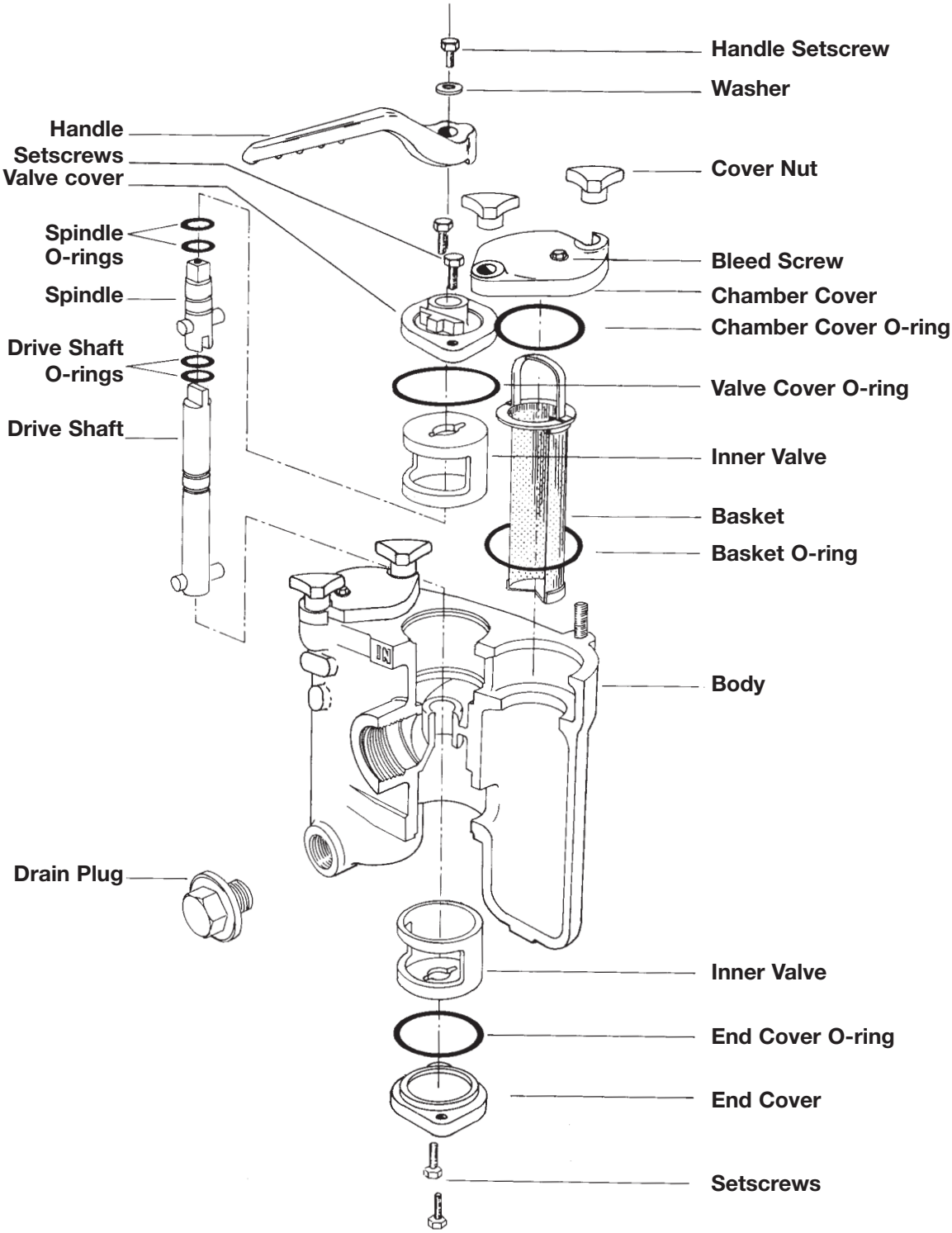

5" & 6" Size - Four basket design not shown.
8" Size - Bolted cover.

ANSI STANDARDS

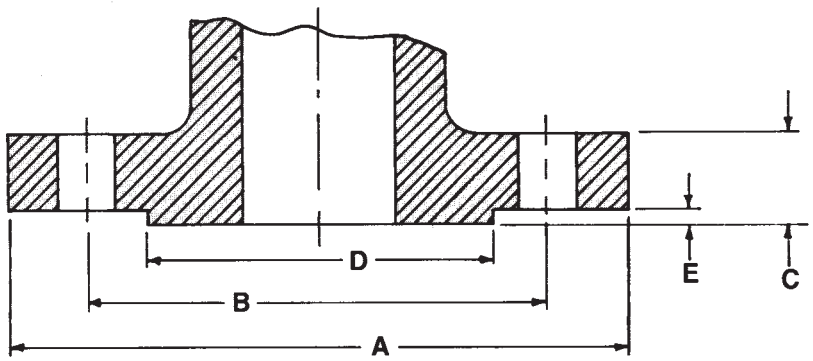

CAST IRON FLANGES

125 lb	PIPE SIZE, INCHES		1	1½	2	2½	3	4	5	6	8
	Flange Dia.	A	4¼	5	6	7	7½	9	10	11	13½
	Bolt Circle Dia.	B	3⅛	3⅞	4¾	5½	6	7½	8½	9½	11¾
	Flange Thk.	C	7/16	9/16	⅝	11/16	¾	15/16	1	1	1⅛
	No. Bolts		4	4	4	4	4	8	8	8	8
	Bolt Dia.		½	½	⅝	⅝	⅝	⅝	¾	¾	¾

BRONZE FLANGES

150 lb	PIPE SIZE, INCHES		1	1½	2	2½	3	4	5	6	8
	Flange Dia.	A	4¼	5	6	7	7½	9	10	11	13½
	Bolt Circle Dia.	B	3⅛	3⅞	4¾	5½	6	7½	8½	9½	11¾
	Flange Thk.	C	⅜	7/16	½	9/16	⅝	11/16	¾	13/16	15/16
	No. Bolts		4	4	4	4	4	8	8	8	8
	Bolt Dia.		½	½	⅝	⅝	⅝	⅝	¾	¾	¾

STEEL FLANGES

150 lb	PIPE SIZE, INCHES		1	1½	2	2½	3	4	5	6	8
	Flange Dia.	A	4¼	5	6	7	7½	9	10	11	13½
	Bolt Circle Dia.	B	3⅛	3⅞	4¾	5½	6	7½	8½	9½	11¾
	Flange Thk.	C	7/16	9/16	⅝	11/16	¾	15/16	15/16	1	1⅛
	Raised Face Dia.	D	2	2⅞	3⅝	4⅛	5	6 3/16	7 5/16	8½	10⅝
	No. Bolts		4	4	4	4	4	8	8	8	8
	Bolt Dia.		½	½	⅝	⅝	⅝	⅝	¾	¾	¾

* Flange thickness (dimension C) includes the 1/16 inch high raised face (Shown above as dimension E)

Other Products

Since 1914, Keckley engineering and manufacturing has been working for industry and commercial building installations worldwide. Keckley products excel in their construction, durability and performance.

It's no wonder so many engineers specify Keckley. If you need Control Valves, Float and Lever Valves, 'Y', Basket and Duplex Strainers...ask for Keckley.

For product information: Phone or FAX today.

Call 800-KECKLEY

FAX: 847-674-2106
E-MAIL: SALES@KECKLEY.COM
WEB SITE: WWW.KECKLEY.COM

We'll send you our catalogs by return mail. If you have special requirements or questions, please contact our expert staff of sales people and engineers. They will be happy to assist you.

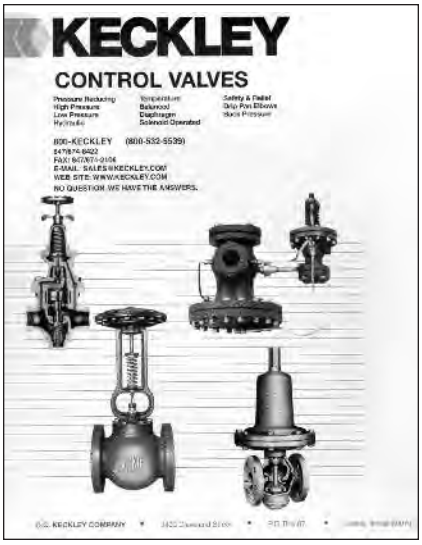

KECKLEY CONTROL VALVES

Bulletin 8900

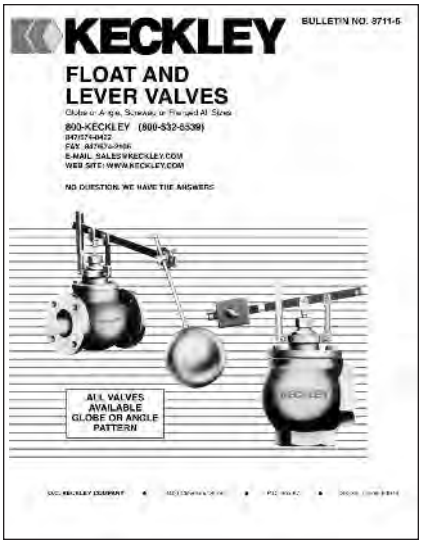

KECKLEY FLOAT & LEVER VALVES

Bulletin 8711

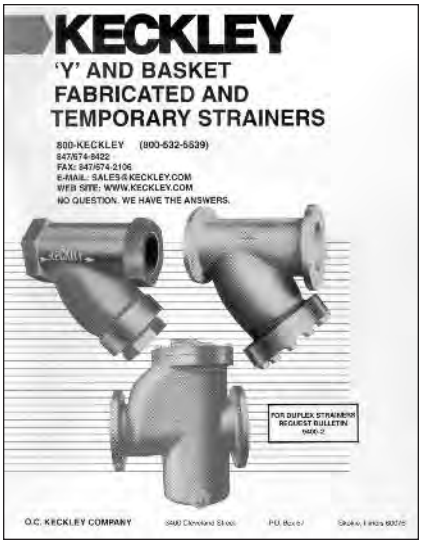

KECKLEY 'Y' AND BASKET, FABRICATED, TEE, TEMPORARY AND SUCTION DIFFUSERS

Bulletin 8815 (Now 3-ring binder)

O. C. KECKLEY COMPANY • 3400 Cleveland Street • P.O. Box 67 • Skokie, Illinois 60076

Printed in U.S.A.

Fabricated "Y" Strainers
Style FSA & FSSA; 150#, 300# and 600# Flanged or Butt Weld Connections 2
Technical Data 3

Style FSA & FSSA; 900#, 1500# and 2500# Flanged or Butt Weld Connections ..... *

Fabricated Basket Strainers
Style FB & FBQ; 150#, 300# and 600# Flanged or Butt Weld Connections 4
Technical Data 5

Fabricated "Tee" Strainers
Style T & TQ; 150#, 300# and 600# Flanged or Butt Weld Connections 6
Technical Data 7

Temporary Strainers - Cone, Basket, Plate
Style TC Temporary Cone Strainer, 150#, 300# and 600# 8
Technical Data 9

Style TB Temporary Basket Strainer, 150#, 300# and 600# 8
Technical Data 9

Style TP Temporary Plate Strainer, 150#, 300# and 600# 8
Technical Data 9

Fabricated Quick Acting Line Blind
Style FLB Fabricated Quick Acting Line Blind; 150# - 2500# 10
Technical Data 11

Fabricated Flanged Offset Basket Strainers 12

Optional Features 13

Pressure Drop Charts
Fabricated "Y" Strainers 14
Fabricated Basket Strainers 15
Fabricated "Tee" Strainers 16
Fabricated Temporary Cone/Basket Strainers 17-18

*For Additional Pressure Classes and Materials of Construction (Low Carbon Steel, Alloy 20, Hastelloy C276, Monel, and Duplex Stainless Steel) visit www.keckley.com

KECKLEY

Style FSA

Fabricated Y-Strainer
Carbon Steel

150 lb. Flanged & Butt Weld
300 lb. Flanged & Butt Weld
600 lb. Flanged & Butt Weld

Style FSSA

Fabricated Y-Strainer
Stainless Steel

150 lb. Flanged & Butt Weld
300 lb. Flanged & Butt Weld
600 lb. Flanged & Butt Weld

Fabricated Y-Strainer

APPLICATIONS

Steam, water, oil or gas where protection from foreign matter in a pipeline is required.

CONSTRUCTION

The Keckley Style FSA (carbon steel) & FSSA (stainless steel) fabricated Y-type strainers are normally supplied with a bolted (slip hinge) cover and are available with either flanged or butt weld connections. Flanges are raised face and drilled in accordance with ASME B16.5 and come standard with back-faced boltholes.

Special dimensions are available. For additional pressure classes, flanges, and materials of construction (Low Carbon Steel, Alloy 20, Hastelloy C276, Monel, and Duplex Stainless Steel) visit www.keckley.com.

FEATURES

The Keckley Style FSA and FSSA strainer screens are piloted through the use of machined grooves in both the body and cover to ensure proper alignment. The cover gasket is designed for specific pressure and temperature ratings. Keckley Style FSA and FSSA strainers have studs and nuts and are furnished with a blow down plug as standard.

Blind covers are available upon request.

SCREENS

Standard screens are perforated 304 stainless steel and are spot welded for maximum strength. Different size perforations and meshes are available in stainless steel, monel, and brass to meet specific media requirements. If media is not indicated, ⅛” perforated 304 stainless steel screens will be supplied.

SELF CLEANING

Self cleaning of the Style FSA and FSSA strainers are accomplished by opening the valve or drain plug connected to the blow off port. **Warning:** See Maintenance Instructions on page S6 of the Strainer Information Section for additional precautions and detailed information on servicing the strainer.

KECKLEY

TECHNICAL DATA
DIMENSIONS AND WEIGHTS

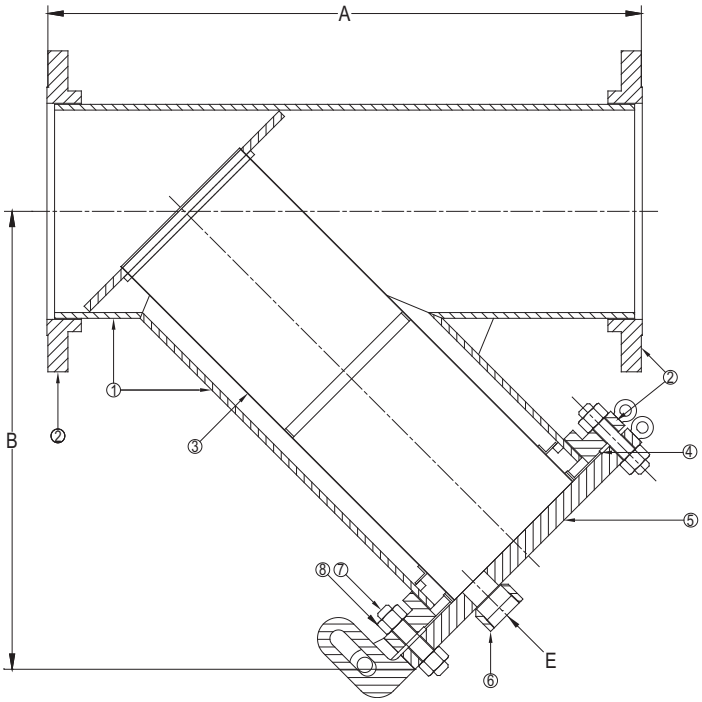

Style FSA

Fabricated Y- Strainer
Carbon Steel

PARTS LIST		
ITEM	DESCRIPTION	MATERIAL
1	Pipe	Carbon Steel Pipe (ASTM A 53)
2	RFSO Flange	Carbon Steel (ASTM A 105) B16.5
3	Screen	Stainless Steel (304) - 1/8" Perforations
4	Gasket	Fiber
5	Blind Flange (Cover)	Carbon Steel (ASTM A 105)
6	3000# NPT Half Coupling	Carbon Steel (ASTM A 105)
7	Stud	Carbon Steel (ASTM A 193, Grade B7)
8	Nut	Carbon Steel (ASTM A 194, Grade 2H)

Options: Other meshes, perforations, and screen materials are available.

Style FSSA

Fabricated Y- Strainer
Stainless Steel

PARTS LIST		
ITEM	DESCRIPTION	MATERIAL
1	Pipe	Stainless Steel (ASTM A 312, Grade TP-316)
2	RFSO Flange	Stainless Steel (ASTM A 182, Grade F-316)B16.5
3	Screen	Stainless Steel (304) - 1/8" Perforations
4	Gasket	Fiber
5	Blind Flange (Cover)	Stainless Steel (ASTM A 182, Grade F-316)
6	3000# NPT Half Coupling	Stainless Steel (ASTM A 182, Grade F-316)
7	Stud	Carbon Steel (ASTM A 193, Grade B7)
8	Nut	Carbon Steel (ASTM A 194, Grade 2H)

Options: Other meshes, perforations, and screen materials are available.

Notes:

Consult factory for additional pressure classes, flange types, pipe grades, and materials of construction.

SIZE		DIMENSIONS										WEIGHTS			
		A				B				E					
		150#		300#		150#		300#		150# & 300#		150#		300#	
in	mm	in	mm	in	mm	in	mm	in	mm	in	mm	lbs	kgs	lbs	kgs
4	100	16	406	18	457	12	305	13	330	1	25	100	45	140	64
5	125	19	483	21	533	14	356	15	381	1	25	130	59	200	91
6	150	22	559	24	610	16	406	19	483	1	25	175	79	265	120
8	200	26	660	28	711	19	483	22	559	1-1/2	40	280	127	410	186
10	250	30	762	31	787	24	610	24	610	1-1/2	40	390	177	600	272
12	300	35	889	36	914	26	660	27	686	1-1/2	40	560	254	840	381
14	350	39	991	41	1041	30	762	32	813	2	50	800	363	1100	499
16	400	45	1143	47	1194	34	864	36	914	2	50	1000	454	1500	680
18	450	46	1168	50	1270	34	864	36	914	2	50	1150	522	1775	805
20	500	52	1321	55	1397	38	965	40	1016	2	50	1400	635	2100	953
24	600	60	1524	62	1575	44	1118	46	1168	2	50	2000	907	3100	1406
30*	750	72	1829	74	1880	50	1270	53	1346	2	50	3000	1361	5150	2336

*30" Flanges are RFWN Series B.
Certified dimensional drawings are available upon request.
†This table reflects only the nearest metric equivalents.

FLOW COEFFICIENTS

Size	C_V	Size	C_V	Size	C_V
8"	759	14"	2182	20"	4902
10"	1233	16"	2878	24"	6641
12"	1740	18"	3479	30"	9487

COVER WEIGHTS

Size		4"	5"	6"	8"	10"	12"	14"	16"	18"	20"	24"	30"
150	lbs	13	15	19	30	43	64	90	106	130	165	220	150
	kgs	6	7	9	14	20	29	41	48	59	75	100	68
300	lbs	24	31	39	58	81	115	165	220	280	325	490	550
	kgs	11	14	18	26	37	52	75	100	127	147	222	249

KECKLEY

Style FB

Fabricated Basket Strainer
Bolted Cover
Carbon Steel & Stainless Steel

150 lb. Flanged & Butt Weld
300 lb. Flanged & Butt Weld
600 lb. Flanged & Butt Weld

Style FB-Q

Fabricated Basket Strainer
Quick Open Cover
Carbon Steel & Stainless Steel

150 lb. Flanged & Butt Weld
300 lb. Flanged & Butt Weld
600 lb. Flanged & Butt Weld

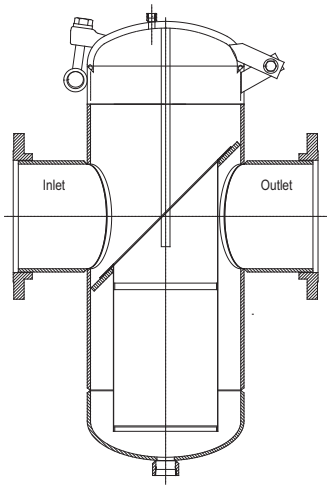

Fabricated Basket Strainer

APPLICATIONS

Steam, water, oil or gas where protection from foreign matter in a pipeline is required.

CONSTRUCTION

The Keckley Style FB family of fabricated basket strainers are available in carbon steel or stainless steel. Either flanged or butt weld connections are furnished. These basket strainers are available with a Quick Open Cover (FB-Q), Bolted Slip Hinge Cover (FB-H), or Integral Swing Arm Davit Assembly (Style FB-D). Flanges are raised face and drilled in accordance with ASME B16.5 and come standard with back-faced boltholes.

Special dimensions are available. For additional pressure classes, flanges, and materials of construction (Low Carbon Steel, Alloy 20, Hastelloy C276, Monel, and Duplex Stainless Steel) visit www.keckley.com.

BASKETS

Baskets are perforated 304 stainless steel and are spot welded for maximum strength. Different size perforations and meshes are available in stainless steel, monel, and brass to meet specific media requirements. If media is not indicated, ⅛" perforated 304 stainless steel baskets will be supplied.

CLEANING

Cleaning of the Style FB strainer is accomplished by removing the cover and pulling out the basket. **Warning:** See Maintenance Instructions on page S6 of the Strainer Information Section for additional precautions and detailed information on servicing the strainer.

KECKLEY

TECHNICAL DATA
DIMENSIONS AND WEIGHTS

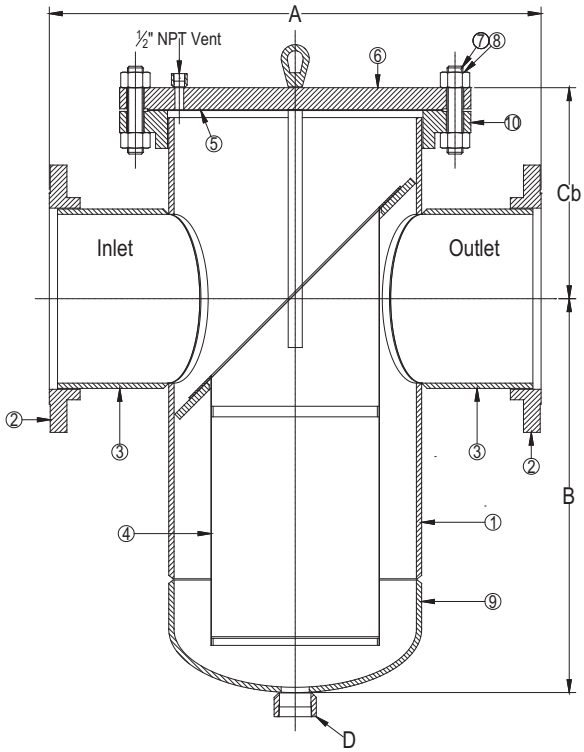

Style FB

Fabricated Basket Strainer

PARTS LIST				
ITEM	DESCRIPTION	MATERIAL		
1	Pipe	Carbon Steel	304 SS	316 SS
2*	RFSO Flange	Carbon Steel	304 SS	316 SS
3	Nozzle	Carbon Steel	304 SS	316 SS
4	Basket	Stainless Steel (304) - 1/8" Perforations		
5	Gasket	Fiber		
6	Blind Flange (Cover)	Carbon Steel	304 SS	316 SS
7	Studs	Carbon Steel (ASTM A 193, Grade B7)		
8	Nuts	Carbon Steel (ASTM A 194, Grade 2H)		
9	Weld Cap	Carbon Steel	304 SS	316 SS
10*	RFSO Flange	Carbon Steel	304 SS	316 SS

*30" & Larger Flanges are RFWN Series B.

Options: Other meshes, perforations, and screen materials are available.

Cover Options

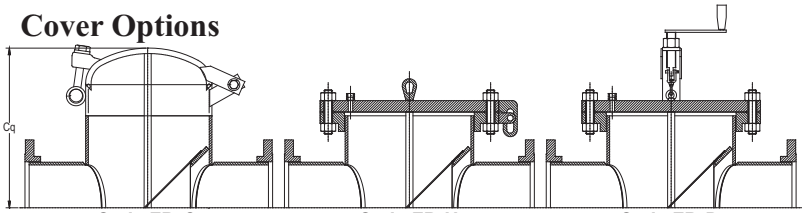

Style FB-Q
Quick Open Cover

Style FB-H
Bolted Slide Hinge Cover

Style FB-D
Integral Davit Swing Arm

Notes:

Consult factory for additional pressure classes, flange types, pipe grades, and materials of construction. Furnished standard with 1/2" NPT Vent.

SIZE		DIMENSIONS															
		A				B		Cb				Cq		D		Body Housing (Pipe Size)	
		150#		300#				150#		300#							
in	mm	in	mm	in	mm	in	mm	in	mm	in	mm	in	mm	in	mm	in	mm
4	100	16	406	17	432	14	356	10-1/2	267	12-1/2	318	11	279	1	25	8	200
5	125	16	406	17	432	15	381	11	279	13	330	13	330	1	25	8	200
6	150	20	508	21	533	17	432	11	279	13	330	13	330	1	25	10	250
8	200	22	559	23	584	21	533	12	305	14	356	15	381	1-1/2	40	12	300
10	250	32	813	33	838	25	635	13	330	15	381	17	432	1-1/2	40	16	400
12	300	35	889	36	914	28	711	15	381	17	432	19	483	1-1/2	40	18	450
14	350	37	940	38	965	33	838	16-1/2	419	18-1/2	470	20	508	2	50	20	500
16	400	42	1067	43	1092	36	914	17-1/2	445	19-1/2	495	23	584	2	50	24	600
18	450	42	1067	43	1092	39	991	18-1/2	470	20	508	24	610	2	50	24	600
20	500	43	1092	44-1/2	1130	44	1118	20	508	25	635	24	610	2	50	30	750
24	600	48	1219	49	1245	44	1118	21	533	27	686	27	686	2	50	30	750
30	750	60	1524	63	1600	54	1372	31	787	35	889	33	838	2	50	36	900

SIZE		WEIGHT												FB-Q Force required to lift cover	
		FB								FB-Q					
		Total Weight				Cover Weight				Total Weight					
		150#		300#		150#		300#		150#		300#			
in	mm	lbs	kgs	lbs	kgs	lbs	kgs	lbs	kgs	lbs	kgs	lbs	kgs	lbs	kgs
4	100	211	96	289	131	47	21	81	37	157	71	180	82	9	4
5	125	250	113	310	141	47	21	81	37	170	77	210	95	9	4
6	150	293	133	421	191	70	32	124	56	222	101	260	118	12	5
8	200	403	183	591	268	123	56	185	84	297	135	353	160	15	7
10	250	630	286	962	436	180	82	315	143	432	196	515	234	26	12
12	300	765	347	1283	582	220	100	415	188	539	244	758	344	32	15
14	350	951	431	1590	721	285	129	515	234	655	297	958	435	40	18
16	400	1323	600	2321	1053	430	195	800	363	870	395	1335	606	58	26
18	450	1357	616	2487	1128	430	195	800	363	904	410	1501	681	58	26
20	500	1943	881	3695	1676	543	246	1249	567	1193	541	1813	822	76	34
24	600	2120	962	4075	1848	543	246	1249	567	1370	621	2193	995	76	34
30	750	3063	1389	6100	2767	890	404	1921	871	2520	1143	5151	2336	149	68

†This table reflects only the nearest metric equivalents.

KECKLEY

Fabricated Tee Strainer

Style T

Fabricated Tee Strainer
Bolted Cover
Carbon Steel & Stainless Steel

150 lb. Flanged & Butt Weld
300 lb. Flanged & Butt Weld
600 lb. Flanged & Butt Weld

Style TQ

Fabricated Tee Strainer
Quick Open Cover
Carbon Steel & Stainless Steel

150 lb. Flanged & Butt Weld
300 lb. Flanged & Butt Weld
600 lb. Flanged & Butt Weld

APPLICATIONS

Steam, water, oil or gas where protection from foreign matter in a pipeline is required.

CONSTRUCTION

The Keckley Style T "Tee" strainers are supplied with weld neck flange or butt weld connections. Ring Type Joint connections are also available; for ring type joint specify ring number and style.

The Style T & TQ strainers are suitable for either horizontal or vertical (downward flow) piping.

Special dimensions are available. For additional pressure classes, flanges, and materials of construction (Low Carbon Steel, Alloy 20, Hastelloy C276, Monel, and Duplex Stainless Steel) visit www.keckley.com.

BASKETS

Standard baskets are ⅛" perforated 304 stainless steel (approximately 6 mesh) and are spot welded for maximum strength. Different size perforations and meshes are available in stainless steel, monel, and brass to meet specific media requirements.

SELF CLEANING

Self cleaning of the Style T & TQ strainers is accomplished (depending upon orientation) by either opening the valve or drain plug connected to the blow off port or removing the cover and pulling out the basket. **Warning:** See Maintenance Instructions on page S6 of the Strainer Information Section for additional precautions and detailed information on servicing the strainer.

KECKLEY

TECHNICAL DATA
DIMENSIONS AND WEIGHTS

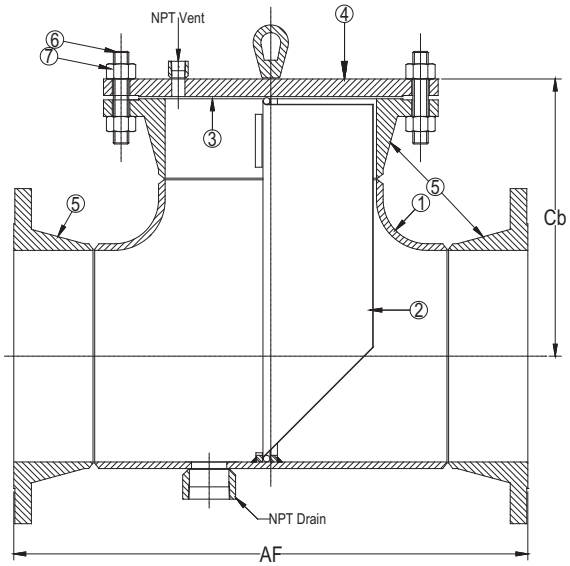

Style T

Fabricated Tee Strainer

PARTS LIST				
ITEM	DESCRIPTION	MATERIAL		
1	Body	Carbon Steel	304 SS	316 SS
2	Basket	Stainless Steel (304) - 1/8" Perforations		
3	Gasket	Fiber		
4	Blind Flange (Cover)	Carbon Steel	304 SS	316 SS
5*	RFWN Flange	Carbon Steel	304 SS	316 SS
6	Studs	Carbon Steel (ASTM A 193, Grade B7)		
7	Nuts	Carbon Steel (ASTM A 194, Grade 2H)		

*30" & Larger Flanges are RFWN Series B.

Options: Other meshes, perforations, and screen materials are available.

Cover Options

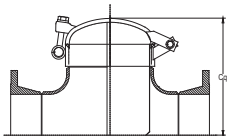

Style TQ
Quick Open Cover

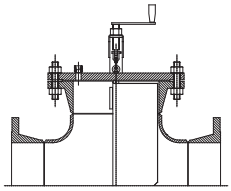

Style TD
Integral Davit Swing Arm

Notes:

Consult factory for additional pressure classes, flange types, pipe grades, and materials of construction. Furnished standard with 1/2" NPT Vent.(Sizes 2"-3" 1/8" NPT Vent.)

SIZE		DIMENSIONS															
		AF				AW		Cb				Cq				Drain Size	
		150#		300#				150#		300#		150#		300#			
in	mm	in	mm	in	mm	in	mm	in	mm	in	mm	in	mm	in	mm	in	mm
2	50	10	254	10-1/2	267	5	127	5-3/4	146	6-1/8	156	--	--	--	--	1/2	15
2-1/2	65	11-1/2	292	12	305	6	152	6-5/8	168	7	178	--	--	--	--	1/2	15
3	80	12-1/4	311	13	330	6-3/4	171	7-1/8	181	7-5/8	194	--	--	--	--	3/4	20
4	100	14-1/4	362	15	381	8-1/4	210	8-1/8	206	8-3/4	222	--	--	--	--	3/4	20
5	125	16-3/4	425	17-1/2	445	9-3/4	248	9-3/8	238	10-1/8	257	--	--	--	--	1	25
6	150	18-1/4	464	19	483	11-1/4	286	10-1/8	257	11	279	9-1/4	235	9-5/8	244	2	50
8	200	22	559	22-3/4	578	14	356	12-1/8	308	13	330	10-5/8	270	11-1/8	283	2	50
10	250	25	635	26-1/4	667	17	432	13-3/4	349	15	381	13-1/8	333	13-1/2	343	2	50
12	300	29	737	30-1/4	768	20	508	15-3/4	400	17-1/8	435	15-5/8	397	15-5/8	397	2	50
14	350	32	813	33-1/4	845	22	559	17-3/8	441	18-3/4	476	16-1/8	410	17-1/8	435	2	50
16	400	34	864	35-1/2	902	24	610	18-1/2	470	20	508	18-5/8	473	18-5/8	473	2	50
18	450	38	965	39-1/2	1003	27	686	20-5/8	524	22-1/8	562	20-7/8	530	21-1/8	537	2	50
20	500	41-3/8	1051	42-3/4	1086	30	762	22-3/8	568	23-7/8	606	23-5/8	600	23-5/8	600	2	50
24	600	46	1168	47-1/4	1200	34	864	24-7/8	632	26-3/8	670	27-1/8	689	27-1/8	689	2	50
30	750	30	762	34-1/2	876	22	559	27-7/8	708	31-7/8	694	--	--	--	--	2	50

SIZE		WEIGHT												TQ Force required to lift cover	
		T								TQ					
		Total Weight				Cover Weight				Total Weight					
		150#		300#		150#		300#		150#		300#			
in	mm	lbs	kgs	lbs	kgs	lbs	kgs	lbs	kgs	lbs	kgs	lbs	kgs	lbs	kgs
2	50	29	13	39	18	5	2	8	4	--	--	--	--	--	--
2-1/2	65	53	24	54	24	7	3	12	5	--	--	--	--	--	--
3	80	59	27	78	33	9	4	16	7	--	--	--	--	--	--
4	100	92	42	117	53	17	8	28	13	--	--	--	--	--	--
5	125	100	45	158	72	20	9	37	17	--	--	--	--	--	--
6	150	136	62	206	93	27	12	50	23	94	43	129	59	4	2
8	200	230	104	322	446	47	21	81	37	154	70	221	100	9	4
10	250	394	179	481	218	70	32	124	56	235	107	311	141	12	5
12	300	520	236	702	318	123	56	185	84	355	161	463	210	15	7
14	350	725	329	1033	469	140	64	250	113	465	211	626	284	20	9
16	400	946	429	1275	578	180	82	315	143	562	255	785	356	26	12
18	450	1129	512	1735	787	220	100	415	188	750	340	1150	522	32	15
20	500	1452	659	2165	982	285	129	515	234	1100	499	1600	726	40	18
24	600	2300	1043	3170	1438	430	195	800	363	1600	726	2150	975	58	26
30	750	1919	870	4059	1841	513	233	1249	567	--	--	--	--	--	--

†This table reflects only the nearest metric equivalents.

KECKLEY

Fabricated Temporary Cone, Basket, & Plate Strainers

Style TC

Temporary Cone Strainer
Carbon Steel & Stainless Steel
150 lb.,300 lb., & 600 lb.

Style TB

Temporary Basket Strainer
Carbon Steel & Stainless Steel
150 lb.,300 lb., & 600 lb.

Style TC

Temporary Cone Strainer
Carbon Steel & Stainless Steel
150 lb.,300 lb., & 600 lb.

APPLICATIONS

Steam, water, oil or gas where protection from foreign matter in a pipeline is required. These strainers are installed between flanges for inexpensive protection of mechanical equipment.

CONSTRUCTION

The Keckley Style TC, TB & TP strainers are available in carbon steel, stainless steel, and other alloys.

Screens are available perforated, mesh, or mesh lined to meet specific media requirements.

STANDARD SCREENS

The Keckley Style TC, TB & TP strainers are normally supplied with ⅛" diameter holes on $^{3}/_{16}$" centers.

WHEN ORDERING SPECIFY

- Pipe Size
- Style
- Pressure Rating
- Perforation or Mesh Size
  - If mesh lined, specify direction of flow.
- Material of Construction

KECKLEY

TECHNICAL DATA
DIMENSIONS AND WEIGHTS

Style TC, TB & TP

Fabricated Temporary Cone, Basket & Plate Strainer
150 lb., 300 lb. & 600 lb.
Cast Steel & Stainless Steel

Unless otherwise specified, standard ⅛" perforations, 150-300 lb. flanges and 150% open area will be supplied.

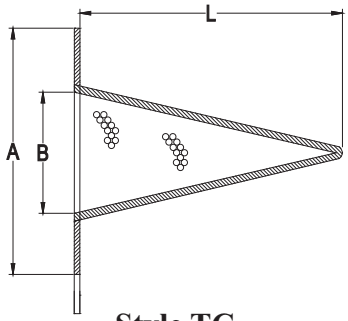

Style TC
Cone Strainer

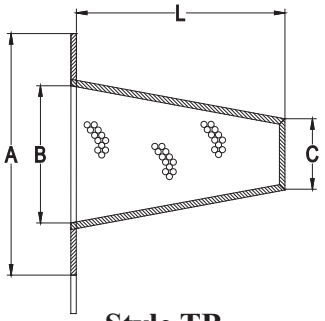

Style TB
Basket Strainer

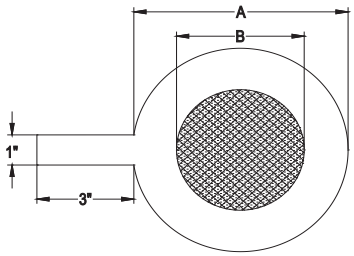

Style TP
Plate Strainer

SIZE		DIMENSIONS							
		A				B		C	
		150 - 300 (std)		600 lb.		All Flange Ratings		All Flange Ratings	
in	mm	in	mm	in	mm	in	mm	in	mm
1-1/2	40	3-1/4	83	3-5/8	92	1-1/4	32	3/4	19
2	50	4	102	4-1/4	108	1-3/4	44	1	25
2-1/2	65	4-3/4	121	5	127	2-1/4	57	1-1/4	32
3	80	5-1/4	133	5-3/4	146	2-3/4	70	1-1/2	38
4	100	6-3/4	171	7-1/2	191	3-3/4	95	2	51
5	125	7-5/8	194	9-3/8	238	4-5/8	117	2-1/2	64
6	150	8-5/8	219	10-3/8	264	5-3/8	137	3	76
8	200	10-7/8	276	12-1/2	318	7-3/8	184	4	102
10	250	13-1/4	337	15-5/8	397	9-3/8	238	5	127
12	300	16	406	17-7/8	454	11	279	6	152
14	350	17-3/8	441	19	483	12-1/4	311	7	178
16	400	20-1/8	511	21-7/8	556	14	356	8	203
18	450	21-1/4	540	23-3/4	603	15-3/4	400	9	229
20	500	23-1/2	597	26-5/8	676	17-1/2	445	10	254
24	600	27-7/8	708	30-7/8	784	21-1/4	540	12	305

SIZE		L 1/8" PERFORATED ON 3/16" CENTERS (% OPEN AREA COMPARED TO CROSS SECTION OF SCHEDULE 40 PIPE)											
		Cones						Baskets					
		100%		150% (std)		200%		100%		150% (std)		200%	
in	mm	in	mm	in	mm	in	mm	in	mm	in	mm	in	mm
1-1/2	40	3-3/16	81	4	102	5	127	2-3/4	70	2-7/8	73	3	76
2	50	3-1/2	89	6	152	8	203	3	76	3-1/2	89	4	102
2-1/2	65	4-1/16	103	6-1/4	159	8	203	3-3/16	81	3-7/8	98	4-1/2	114
3	80	4-1/4	108	6-3/4	171	9	229	3-1/2	89	3-7/8	98	5-1/2	140
4	100	5	127	10	254	12	305	4	102	5	127	7	178
5	125	6	152	12	305	14	356	5	127	6-3/8	162	9	229
6	150	7	178	13	330	18	457	6	152	7-3/4	197	11	279
8	200	8-3/16	208	17	432	23	584	6-1/8	156	9-3/4	248	14	356
10	250	12	305	22	559	28	711	7-1/2	191	12-3/8	314	18	457
12	300	13	330	26	660	34	864	9	229	14-3/4	375	20	508
14	350	15	381	27	686	36	914	10	254	15-7/8	403	21	533
16	400	17	432	30	762	40	1016	10	254	18-3/8	467	23	584
18	450	19	483	35	889	46	1168	12	305	20-7/8	530	27	686
20	500	21	533	39	991	51	1295	14	356	23-1/2	597	31	787
24	600	25	635	45	1143	61	1549	16	406	28-3/8	721	37	940

Consult factory for sizes not shown.
†This table reflects only the nearest metric equivalents.

KECKLEY

Style FLB

Fabricated Line Blinds
Carbon Steel & Stainless Steel
150 lb. to 2500 lb.
Flanged or Butt Weld

Quick Acting Line Blinds

APPLICATIONS

Keckley's Quick Acting Line Blinds are designed for applications where positive, visual indication of line closure/opening are required.

FEATURES

The position of the spectacle plate indicates whether the line is open or closed, reducing or eliminating the possibility of costly or dangerous situations. Keckley Quick Acting Line Blinds utilize O-ring seals to achieve the most effective shutoff. Our standard O-ring is located in the dovetail groove in both faces of the spectacle plate.

Two stainless steel guide pins are located in the face of the body flange to ensure accurate alignment of the spectacle plate with the bore.

With the Keckley Quick Acting Line Blind, one operator can change a 6" Line Blind in five minutes without the need for special tools as compared to a typical 6" spectacle blind, which takes two maintenance men approximately 1-12 hours to change over.

CONSTRUCTION

The standard model has a carbon steel body and zinc plated carbon steel trim. Stainless steel and other alloys are also available to meet your specific requirements. All units are available flanged or butt weld.

KECKLEY

TECHNICAL DATA
DIMENSIONS AND WEIGHTS

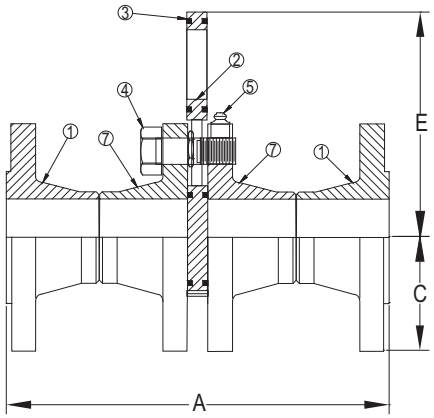

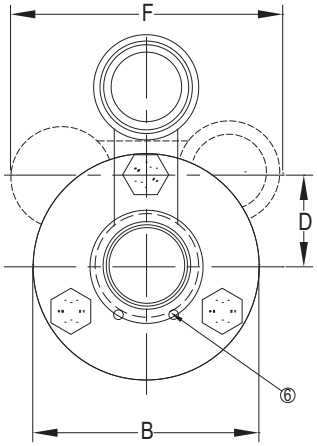

Style FLB

Fabricated Line Blinds
150 lb. to 2500 lb. Flanged & Butt Weld
Carbon Steel & Stainless Steel

PARTS LIST		
ITEM	DESCRIPTION	MATERIAL
1	RFWN Flange	Carbon Steel (ASTM A 105) B16.5
2	Spectacle Plate	Carbon Steel (ASTM A 36)
3*	O-ring	Buna-N
4	Pivot Bolt / Spreader Bolt	Carbon Steel (SAE J 429, Grade 8)
5	Grease Fitting (Qty. 3)	
6	Spring Pins	Stainless Steel (304)

*Buna-N o-ring good for temperatures up to 250°F. For higher temperatures, consult factory.

Pipe Size		DIMENSION - 150# CLASS											
		A		B		C		D		E		F	
in	mm	in	mm	in	mm	in	mm	in	mm	in	mm	in	mm
1	25	9	229	4-1/4	108	2-1/8	54	1-9/16	40	4-3/8	111	5-5/8	143
1-1/2	40	10	254	5	127	2-1/2	64	1-15/16	49	5-1/2	140	7-1/8	181
2	50	10-3/8	264	6	152	3	76	2-3/8	60	6-3/4	171	8-3/4	222
2-1/2	65	11-3/8	289	7	178	3-1/2	89	2-3/4	70	7-7/8	200	10-1/4	260
3	80	11-3/8	289	7-1/2	191	3-3/4	95	3	76	8-5/8	219	11-1/4	286
4	100	12-1/2	318	9	229	4-1/2	115	3-3/4	95	10-7/8	276	14-1/4	362
5	125	14-5/8	371	10	254	5	127	4-1/4	108	10-7/8	276	14-1/4	362
6	150	14-5/8	371	11	274	5-1/2	140	4-3/4	121	13-13/16	351	18-1/8	460
8	200	16-5/8	422	13-1/2	343	6-3/4	171	5-7/8	149	17-3/16	437	22-5/8	575
10	250	16-3/4	425	16	406	8	203	7-1/8	181	20-7/8	530	27-1/2	699
12	300	18-7/8	479	19	483	9-1/2	241	8-1/2	216	25	635	33	838
14	350	20-7/8	530	21	533	10-1/2	267	9-3/4	248	27-1/2	699	36-1/4	921
16	400	21	533	23-1/2	597	11-3/4	299	10-5/8	270	31-1/4	794	41-1/4	1048
18	450	23-1/8	587	25	635	12-1/2	318	11-3/8	289	33-7/16	849	44-1/8	1121
20	500	24	610	27-1/2	699	13-3/4	350	12-1/2	318	36-13/16	935	48-5/8	1235
24	600	25-3/8	645	32	813	16	407	14-3/4	375	43-1/2	1105	57-1/2	1461

Certified dimensional drawings are available upon request.
†This table reflects only the nearest metric equivalents.

WEIGHTS																	
Size		1"	1-1/2"	2"	2-1/2"	3"	4"	5"	6"	8"	10"	12"	14"	16"	18"	20"	24"
Butt Weld	lbs	7	9	14	23	26	38	52	62	104	143	238	302	407	469	582	851
	kgs	3.2	4.1	6.4	10	12	17	24	28	47	65	108	137	185	213	264	386
Flanged	lbs	13	17	26	43	49	71	94	114	188	251	414	530	687	799	976	1387
	kgs	5.9	7.7	12	20	22	32	43	52	85	114	188	240	312	362	443	629

KECKLEY

Style FBO

Fabricated Basket - Offset
Bolted Cover
Carbon Steel & Stainless Steel

150 lb. Flanged & Butt Weld
300 lb. Flanged & Butt Weld
600 lb. Flanged & Butt Weld

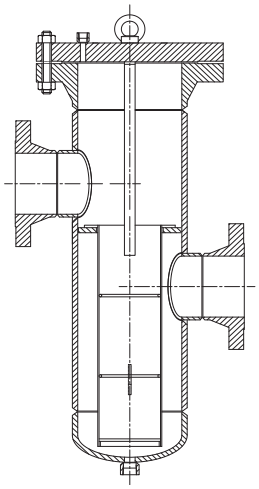

Flanged Offset Basket Strainer

APPLICATIONS

Water, oil or gas where protection from foreign matter in a pipeline is required.

CONSTRUCTION

Theses strainers can be fabricated to any specifications. The offset flanges allow easy connection for a wide variety of pump installations. These strainers are available in carbon steel, 304 stainless steel, and 316 stainless steel.

FEATURES

Theses strainers have been designed to answer the specific need for an extremely large capacity strainer requiring minimum down time for cleaning and are ideal for very fine straining. The basket and seat are designed to eliminate sediment by-pass for particle sizes as small as five micron. The low outlet design lends itself to pump installations where the suction is located close to the floor.

BASKETS

Standard baskets are perforated 304 stainless steel. All baskets are spot welded for maximum strength. Different size perforations and meshes are available in stainless steel, monel, and brass to meet specific media requirements. If media is not indicated, ⅛” perforated 304 stainless steel baskets will be supplied.

Optional Features

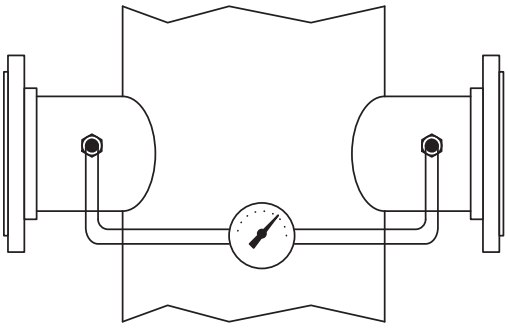

Differential Pressure Gauge

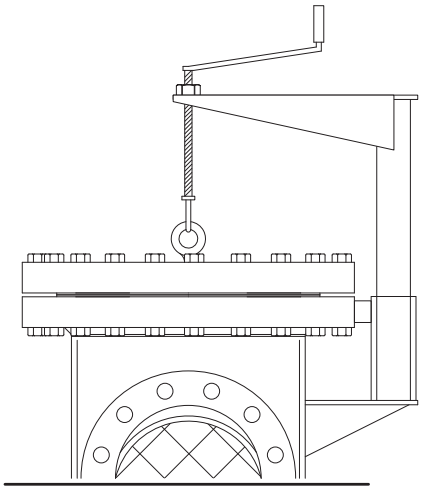

Integral Davit Swing Arm

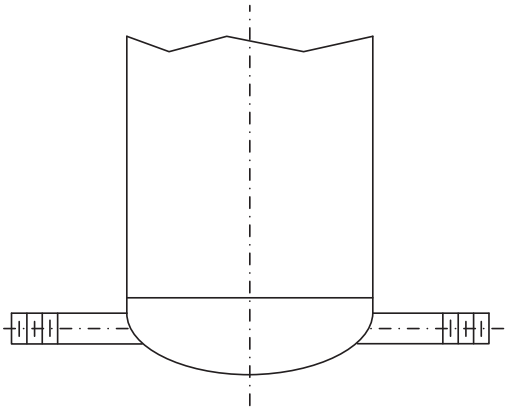

Special Drains

SPECIAL OPTIONS ON FABRICATED STRAINERS

- Differential Pressure Gauges
- Custom Nozzle Positions
- Custom Blowdown Connections
- Custom Venting
- Custom Basket Configurations
- Special Coatings and Galvanizing
- Custom Floor Stands and Mounting Hardware
- Oversized Bodies

DATA REQUIRED WHEN ORDERING

- Inlet and Outlet Size
- End Connections (Flange or Butt Weld)
- If Offset, Specify Dimensions
- Body Rating
- Design Pressure and Temperature
- Capacity Requirements
- Screen Material and Perforation/Mesh Size

KECKLEY

PRESSURE DROP CHART

Fabricated Y-Type Strainers

This pressure drop chart is based on the flow of clean water through the Keckley fabricated Y-Type strainers with a ⅛" perforated screen.

TO USE CHARTS:

Find your desired rate of flow (GPM) on the left hand side of the chart. Follow its corresponding horizontal line to the point where it intersects the diagonal line indicating the strainer pipe size. From this point of intersection, follow the vertical line down to the bottom of the chart to determine the approximate pressure drop.

CORRECTION FACTORS:

For finer mesh baskets that are backed with a perforated sheet, multiply the pressure drops shown at right by the following:

40 mesh	x 1.2
60 mesh	x 1.4
80 mesh	x 1.6
100 mesh	x 1.7

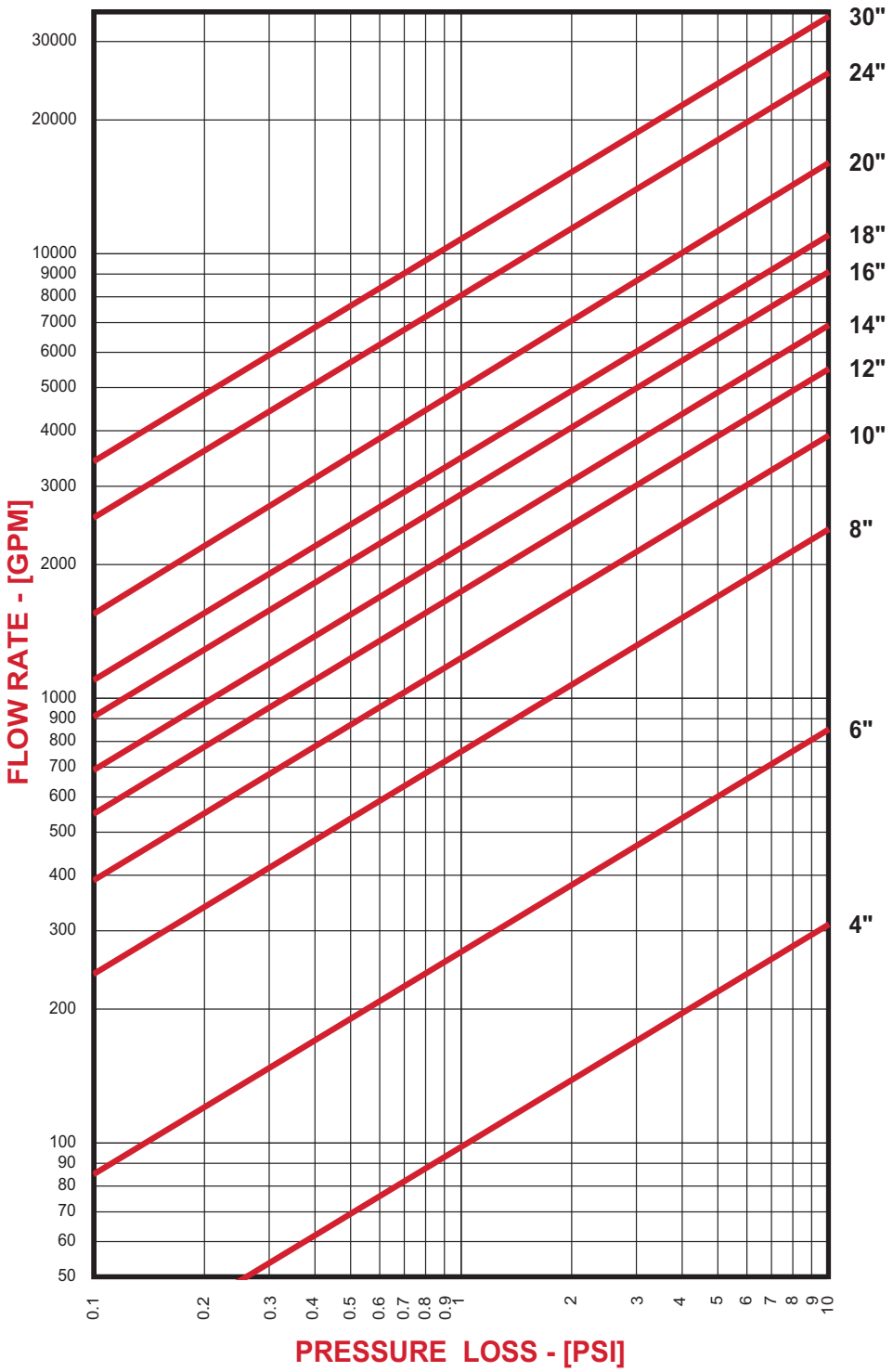

KECKLEY

PRESSURE DROP CHART

Fabricated Basket Strainers

This pressure drop chart is based on the flow of clean water through the Keckley fabricated basket strainers with a ⅛" perforated basket.

TO USE CHARTS:

Find your desired rate of flow (GPM) on the left hand side of the chart. Follow its corresponding horizontal line to the point where it intersects the diagonal line indicating the strainer pipe size. From this point of intersection, follow the vertical line down to the bottom of the chart to determine the approximate pressure drop.

CORRECTION FACTORS:

For finer mesh baskets that are backed with a perforated sheet, multiply the pressure drops shown at right by the following:

40 mesh	x 1.2
60 mesh	x 1.4
80 mesh	x 1.6
100 mesh	x 1.7

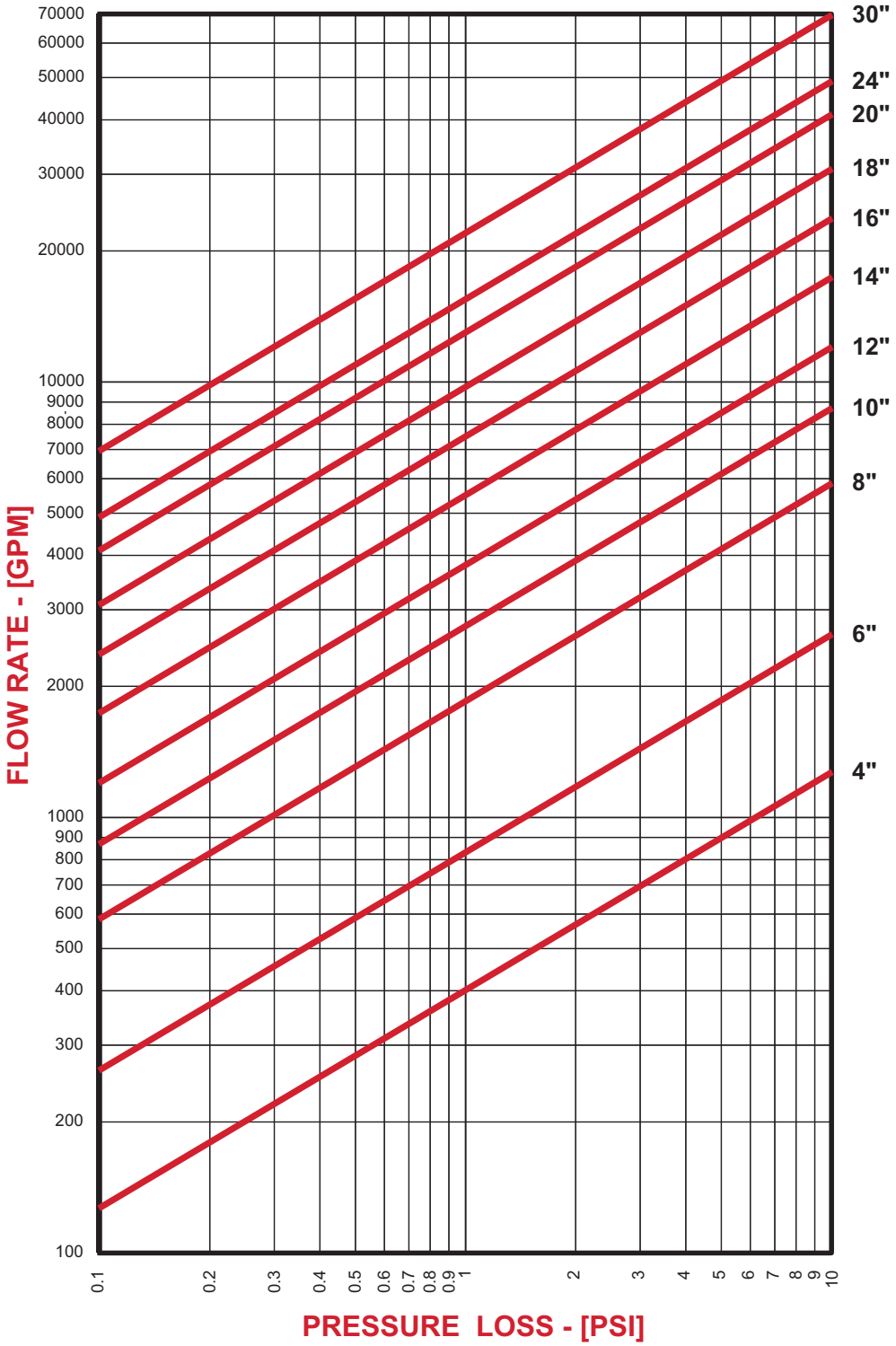

KECKLEY

PRESSURE DROP CHART

Fabricated T-Type Strainers

This pressure drop chart is based on the flow of clean water through the Keckley Fabricated T-Type strainers with ⅛" perforations (approximately 6 mesh).

TO USE CHARTS:

Find your desired rate of flow (GPM) on the left hand side of the chart. Follow its corresponding horizontal line to the point where it intersects the diagonal line indicating the strainer pipe size. From this point of intersection, follow the vertical line down to the bottom of the chart to determine the approximate pressure drop.

CORRECTION FACTORS:

For finer mesh baskets that are backed with a perforated sheet, multiply the pressure drops shown at right by the following:

40 mesh	x 1.2
60 mesh	x 1.4
80 mesh	x 1.6
100 mesh	x 1.7

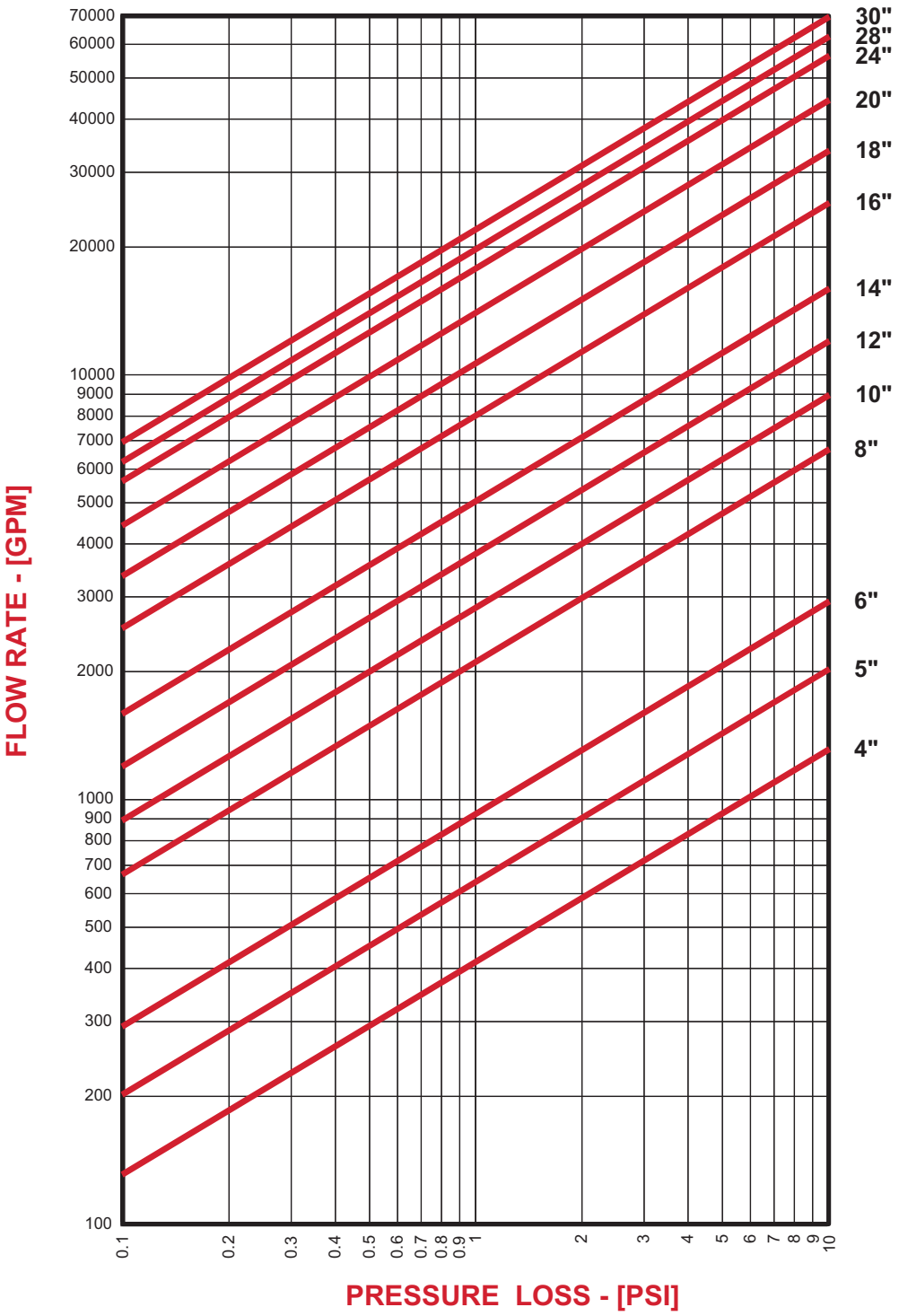

KECKLEY

PRESSURE DROP CHART

Fabricated Temporary Cone/Basket Strainers

This pressure drop chart is based on the flow of clean water through the Keckley strainer styles listed above with screen perforations ranging from 3/64” through 1/8”.

TO USE CHARTS:

Find your desired rate of flow (GPM) on the left hand side of the chart. Follow its corresponding horizontal line to the point where it intersects the diagonal line indicating the strainer pipe size. From this point of intersection, follow the vertical line down to the bottom of the chart to determine the approximate pressure drop.

CORRECTION FACTORS:

For finer mesh baskets that are backed with a perforated sheet, multiply the pressure drops shown at right by the following:

40 mesh	x 1.2
60 mesh	x 1.4
80 mesh	x 1.6
100 mesh	x 1.7

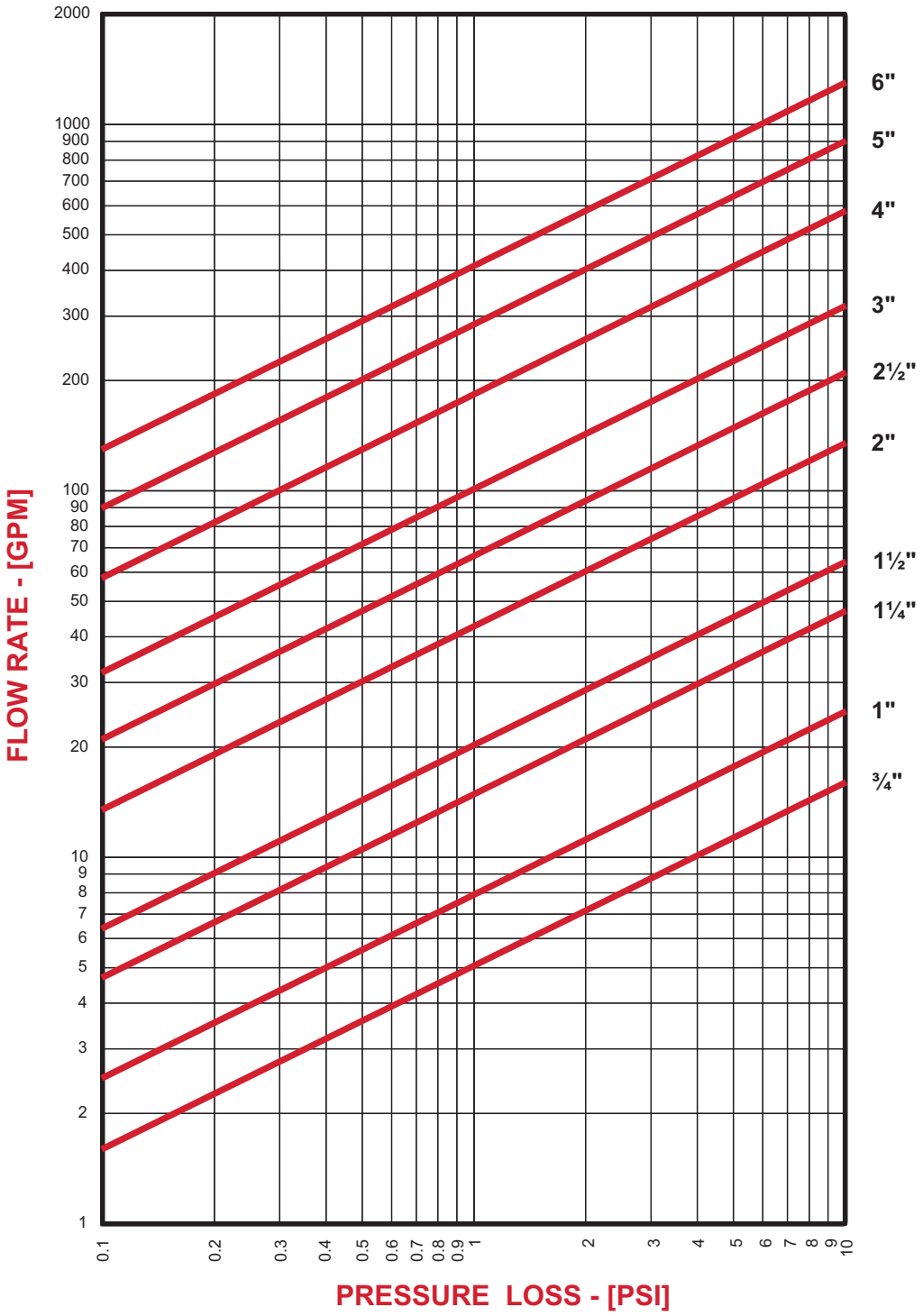

KECKLEY

PRESSURE DROP CHART

Fabricated Temporary Cone/Basket Strainers

This pressure drop chart is based on the flow of clean water through the Keckley strainer styles listed above with screen perforations ranging from 3/64” through 1/8”.

TO USE CHARTS:

Find your desired rate of flow (GPM) on the left hand side of the chart. Follow its corresponding horizontal line to the point where it intersects the diagonal line indicating the strainer pipe size. From this point of intersection, follow the vertical line down to the bottom of the chart to determine the approximate pressure drop.

CORRECTION FACTORS:

For finer mesh baskets that are backed with a perforated sheet, multiply the pressure drops shown at right by the following:

40 mesh	x 1.2
60 mesh	x 1.4
80 mesh	x 1.6
100 mesh	x 1.7

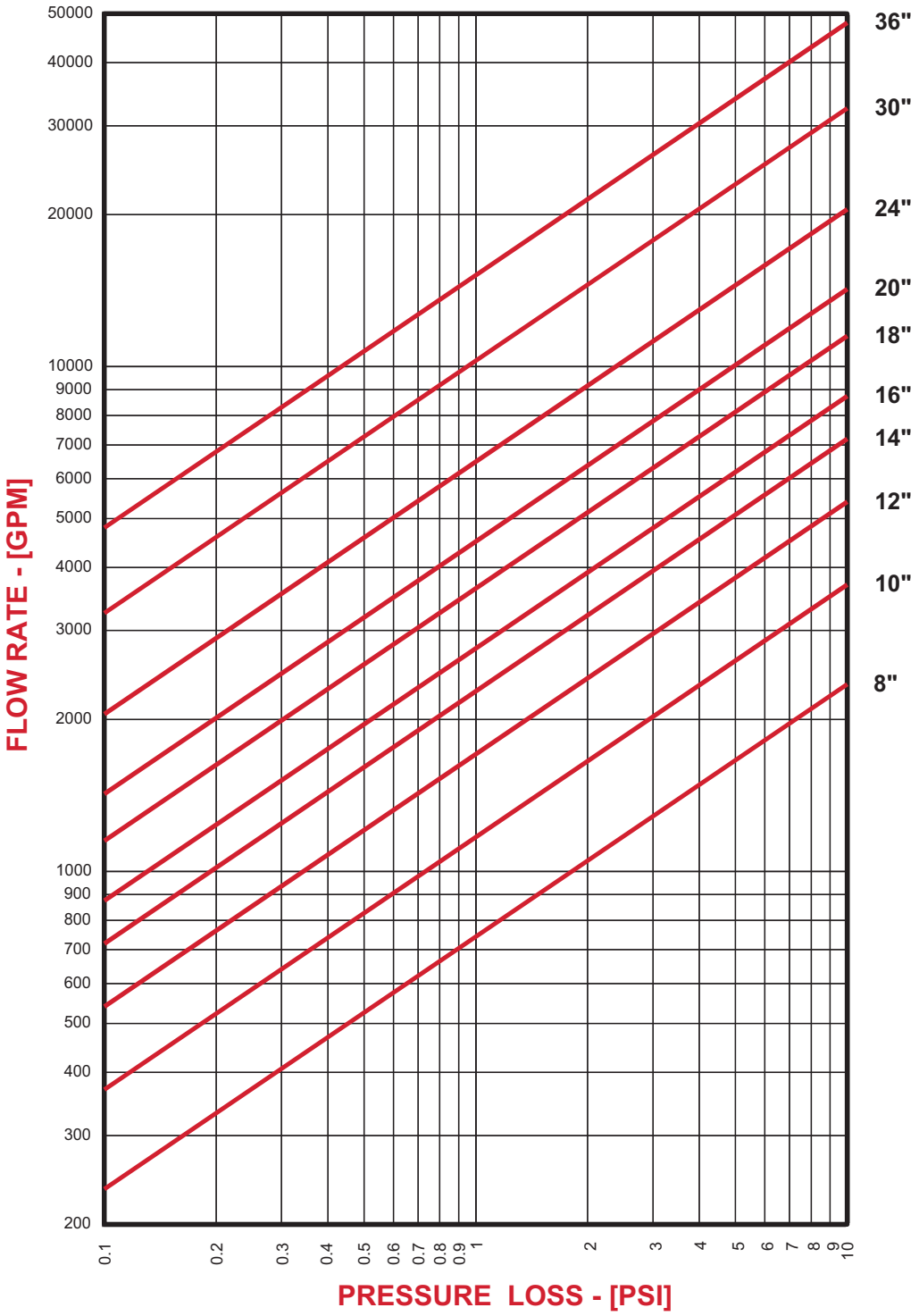

KECKLEY

TECHNICAL DATA

Templates for Drilling 2

Physical Properties & Chemical Compositions 3

Product Specifications 4-5

Government / Military Specifications
Y-Strainers 6
Basket Stainers 6

KECKLEY

ASME / ANSI STANDARDS

Flange, Bolt Holes, and Bolting Dimensions for Flanged Fittings.

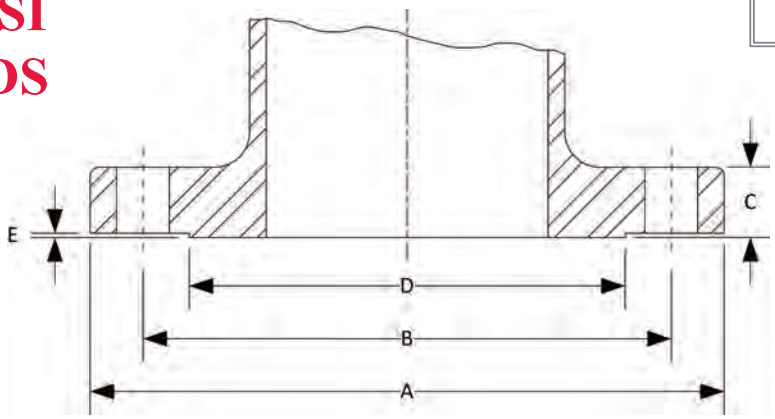

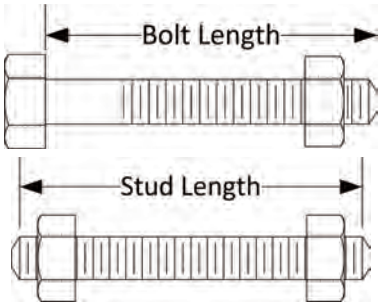

Cast Iron Flanges

125 lb.		1/2	3/4	1	1-1/4	1-1/2	2	2-1/2	3	4	5	6	8	10	12	14	16	18	20
Flange Dia.	A	--	--	4-1/4	4-5/8	5	6	7	7-1/2	9	10	11	13-1/2	16	19	21	23-1/2	25	27-1/2
Bolt Circle Dia.	B	--	--	3-1/8	3-1/2	3-7/8	4-3/4	5-1/2	6	7-1/2	8-1/2	91/2	11-3/4	14-1/4	17	18-3/4	21-1/4	22-3/4	25
Flange Thk.	C	--	--	7/16	1/2	6/16	5/8	11/16	3/4	15/16	15/16	1	1-1/8	1-3/16	1-1/4	1-3/8	1-7/16	1-9/16	1-11/16
No. Bolts		--	--	4	4	4	4	4	4	8	8	8	8	12	12	12	16	16	20
Bolt Dia.		--	--	1/2	1/2	1/2	5/8	5/8	5/8	5/8	3/4	3/4	3/4	7/8	7/8	1	1	1-1/8	1-1/8
Bolt Length		--	--	1-3/4	2	2	2-1/4	2-1/2	2-1/2	3	3	3-1/4	3-1/2	3-3/4	3-3/4	4-1/4	4-1/2	4-3/4	5
250 lb.																			
Flange Dia.	A	--	--	4-7/8	5-1/4	6-1/8	6-1/2	7-1/2	8-1/4	10	11	12-1/2	15	17-1/2	20-1/2	23	25-1/2	28	30-1/2
Bolt Circle Dia.	B	--	--	3-1/2	3-7/8	4-1/2	5	5-7/8	6-5/8	7-7/8	9-1/4	10-5/8	13	15-1/4	17-3/4	20-1/4	22-1/2	24-3/4	27
Flange Thk.*	C	--	--	11/16	3/4	13/16	7/8	1	1-1/8	1-1/4	1-3/8	1-7/16	1-5/8	1-7/8	2	2-1/8	2-1/4	2-3/8	2-1/2
Raised Face Dia.	D	--	--	2-11/16	3-1/16	3-9/16	4-3/16	4-15/16	5-11/16	6-15/16	8-5/16	9-11/16	11-15/16	14-1/16	16-7/16	18-15/16	21-1/16	23-5/16	25-9/16
No. Bolts		--	--	4	4	4	8	8	8	8	8	12	12	16	16	20	20	24	24
Bolt Dia.		--	--	5/8	5/8	3/4	5/8	3/4	3/4	3/4	3/4	3/4	7/8	1	1-1/8	1-1/8	1-1/4	1-1/4	1-1/4
Bolt Length		--	--	2-1/2	2-1/2	2-3/4	2-3/4	3-1/4	3-1/2	3-3/4	4	4	4-1/2	5-1/4	5-1/2	6	6-1/4	6-1/2	6-3/4

Bronze Flanges

150 lb.		1/2	3/4	1	1-1/4	1-1/2	2	2-1/2	3	4	5	6	8	10	12	14	16	18	20
Flange Dia.	A	3-1/2	3-7/8	4-1/4	4-5/8	5	6	7	7-1/2	9	10	11	13-1/2	16	19	--	--	--	--
Bolt Circle Dia.	B	2-3/8	2-3/4	3-1/8	3-1/2	3-7/8	4-3/4	5-1/2	6	7-1/2	8-1/2	9-1/2	11-3/4	14-1/4	17	--	--	--	--
Flange Thk.	C	5/16	11/32	3/8	13/32	7/16	1/2	9/16	5/8	11/16	3/4	13/16	15/16	1	1-1/16	--	--	--	--
No. Bolts		4	4	4	4	4	4	4	4	8	8	8	8	12	12	--	--	--	--
Bolt Dia.		1/2	1/2	1/2	1/2	1/2	5/8	5/8	5/8	5/8	3/4	3/4	3/4	7/8	7/8	--	--	--	--
Bolt Length		1-3/4	1-3/4	1-3/4	2	2	2-1/4	2-1/2	2-1/2	3	3	3-1/4	3-1/2	3-3/4	3-3/4	--	--	--	--
300 lb.																			
Flange Dia.	A	3-3/4	4-5/8	4-7/8	5-1/4	6-1/8	6-1/2	7-1/2	8-1/4	10	11	12-1/2	15	--	--	--	--	--	--
Bolt Circle Dia.	B	2-5/8	3-1/4	3-1/2	3-7/8	4-1/2	5	5-7/8	6-5/8	7-7/8	9-1/4	10-5/8	13	--	--	--	--	--	--
Flange Thk.	C	1/2	17/32	19/32	5/8	11/16	3/4	13/16	29/32	1-1/16	1-1/8	1-3/16	1-3/8	--	--	--	--	--	--
No. Bolts		4	4	4	4	4	8	8	8	8	8	12	12	--	--	--	--	--	--
Bolt Dia.		1/2	5/8	5/8	5/8	3/4	5/8	3/4	3/4	3/4	3/4	3/4	7/8	--	--	--	--	--	--
Bolt Length		2	2	2-1/2	2-1/2	2-3/4	2-3/4	3-1/4	3-1/2	3-3/4	4	4	4-1/2	--	--	--	--	--	--

Steel Flanges

150 lb.		1/2	3/4	1	1-1/4	1-1/2	2	2-1/2	3	4	5	6	8	10	12	14	16	18	20
Flange Dia.	A	3-1/2	3-7/8	4-1/4	4-5/8	5	6	7	7-1/2	9	10	11	13-1/2	16	19	21	23-1/2	25	27-1/2
Bolt Circle Dia.	B	2-3/8	2-3/7	3-1/8	3-1/2	3-7/8	4-3/4	5-1/2	6	7-1/2	8-1/2	9-1/2	11-3/4	14-1/4	17	18-3/4	21-1/4	22-3/4	25
Flange Thk.*	C	7/16	7/16	7/16	1/2	9/16	5/8	11/16	3/4	15/16	15/16	1	1-1/8	1-3/16	1-1/4	1-3/8	1-7/16	1-9/16	1-11/16
Raised Face Dia.	D	1-3/8	1-11/16	2	2-1/2	2-7/8	3-5/8	4-1/8	5	6-3/16	7-5/16	8-1/2	10-5/8	12-3/4	15	16-1/4	18-1/2	21	23
No. Bolts		4	4	4	4	4	4	4	4	8	8	8	8	12	12	12	16	16	20
Bolt Dia.		1/2	1/2	1/2	1/2	1/2	5/8	5/8	5/8	5/8	3/4	3/4	3/4	7/8	7/8	1	1	1-1/8	1-1/8
Bolt Length		2	2	2-1/4	2-1/4	2-1/2	2-3/4	3	3	3	3-1/4	3-1/4	3-1/2	4	4	4-1/2	4-1/2	5	5-1/2
Stud Length		2-1/4	2-1/2	2-1/2	2-3/4	2-3/4	3-1/4	3-1/2	3-1/2	3-1/2	3-3/4	4	4-1/4	4-1/2	4-3/4	5-1/4	5-1/4	5-3/4	6-1/4
300 lb.																			
Flange Dia.	A	3-3/4	4-5/8	4-7/8	5-1/4	6-1/8	6-1/2	7-1/2	8-1/4	10	11	12-1/2	15	17-1/2	20-1/2	23	25-1/2	28	30-1/2
Bolt Circle Dia.	B	2-5/8	3-1/4	3-1/2	3-7/8	4-1/2	5	5-7/8	6-5/8	7-7/8	9-1/4	10-5/8	13	15-1/4	17-3/4	20-1/4	22-1/2	24-3/4	27
Flange Thk.*	C	9/16	5/8	11/16	3/4	13/16	7/8	1	1-1/8	1-1/4	1-3/8	1-7/16	1-5/8	1-7/8	2	2-1/8	2-1/4	2-3/8	2-1/2
Raised Face Dia.	D	1-3/8	1-11/16	2	2-1/2	2-7/8	3-5/8	4-1/8	5	6-3/16	7-5/16	8-1/2	10-5/8	12-3/4	15	16-1/4	18-1/2	21	23
No. Bolts		4	4	4	4	4	8	8	8	8	8	12	12	16	16	20	20	24	24
Bolt Dia.		1/2	5/8	5/8	5/8	3/4	5/8	3/4	3/4	3/4	3/4	3/4	7/8	1	1-1/8	1-1/8	1-1/4	1-1/4	1-1/4
Bolt Length		2-1/4	2-1/2	2-1/2	2-3/4	3	3	3-1/4	3-1/2	3-3/4	4-1/4	4-1/4	4-3/4	5-1/2	5-3/4	6-1/4	6-1/2	6-3/4	7-1/4
Stud Length		2-1/2	3	3	3-1/4	3-1/2	3-1/2	4	4-1/4	4-1/2	4-3/4	4-3/4	5-1/2	6-1/4	6-3/4	7	7-1/2	7-3/4	8
600 lb.																			
Flange Dia.	A	3-3/4	4-5/8	4-7/8	5-1/4	6-1/8	6-1/2	7-1/2	8-1/4	10-3/4	13	14	16-1/2	20	22	23-3/4	27	29-1/4	32
Bolt Circle Dia.	B	2-5/8	3-1/4	3-1/2	3-7/8	4-1/2	5	5-7/8	6-5/8	8-1/2	10-1/2	11-1/2	13-3/4	17	19-1/4	20-3/4	23-3/4	25-3/4	28-1/2
Flange Thk.*	C	9/16	5/8	11/16	13/16	7/8	1	1-1/8	1-1/4	1-1/2	1-3/4	1-7/8	2-3/16	2-1/2	2-5/8	2-3/4	3	3-1/4	3-1/2
Raised Face Dia.	D	1-3/8	1-11/16	2	2-1/2	2-7/8	3-5/8	4-1/8	5	6-3/16	7-5/16	8-1/2	10-5/8	12-3/4	15	16-1/4	18-1/2	21	23
No. Bolts		4	4	4	4	4	8	8	8	8	8	12	12	16	20	20	20	20	24
Bolt Dia.		1/2	5/8	5/8	5/8	3/4	5/8	3/4	3/4	7/8	1	1	1-1/8	1-1/4	1-1/4	1-3/8	1-1/2	1-5/8	1-5/8
Stud Length		3	3-1/2	3-1/2	3-3/4	4-1/4	4-1/4	4-3/4	5	5-3/4	6-1/2	6-3/4	7-1/2	8-1/2	8-3/4	9-1/4	10	10-3/4	11-1/2

*Flange thickness (dimension C) includes a 1/16 inch high face (dimension E).
†Flange thickness (dimension C) **does not include** a 1/4 inch high face (dimension E).

KECKLEY COMPANY • 3400 Cleveland Street • Skokie, Illinois 60076 1-800-KECKLEY

KECKLEY

TECHNICAL DATA

PHYSICAL PROPERTIES & CHEMICAL COMPOSITION

CAST IRON - ASTM A 126, CLASS B

Tensile Strength..... 31,000 PSI
Compressive Strength ...109,000 PSI
Tensile Modulus.....15 x 10^6 PSI

Chemical Composition:
- C (Carbon) .....3.20 - 3.40%
- Si (Silicon) .....2.10 - 2.30%
- P (Phosphorus) .....0.15 - 0.30%
- S (Sulfur).....0.08 - 0.12%
- Mn (Manganese) .....0.50 - 0.80%

DUCTILE IRON - ASTM A 536, GRADE 65-45-12

Tensile Strength ..... 60/80,000 PSI
Yield.....45/60,000 PSI
Elongation 10/30%

Chemical Composition:
- C (Carbon) .....3.20 - 3.40%
- Si (Silicon) .....1.80 - 2.80%
- P (Phosphorus) .....0.08% Max.
- S (Sulfur).....0.03% Max.
- Mn (Manganese) .....0.03% Max.

BRONZE - ASTM B 62, C83600

Tensile Strength..... 30,000 PSI
Yield .....14,000 PSI
Elongation.....20%

Chemical Composition:
- Cu (Copper).....85.0%
- Sn (Tin).....5.0%
- Pb (Lead) 5.0%
- Zn (Zinc) 5.0%
- Ni (Nickel) .....1.0% Max.
- Fe (Iron) .....0.3% Max.
- P (Phosphorus) .....0.5% Max.

CARBON STEEL - ASTM A 216, GRADE WCB

Tensile Strength..... 70,000 PSI
Yield .....36,000 PSI
Elongation.....22%

Chemical Composition:
- C (Carbon).....0.30%
- Si (Silicon) 0.60%
- P (Phosphorus) 0.04%
- S (Sulfur).....0.045%
- Mn (Manganese) 1.00%
- Residual Elements.....1.00% Max.

316 STAINLESS STEEL - ASTM A 351, GRADE CF8M

Tensile Strength..... 70,000 PSI
Yield .....30,000 PSI
Elongation.....30%

Chemical Composition:
- C (Carbon) .....0.08% Max.
- Si (Silicon) 1.5%
- P (Phosphorus) 0.040%
- Cr (Chromium) .....18.0 - 21.0%
- Ni (Nickel) .....9.0 - 12.0%
- Mn (Manganese) 1.50%
- S (Sulfur).....0.04%
- Mo (Molybdenum).....2.0 - 3.0%

BRONZE - ASTM B 584, C84400

Chemical Composition:
- Cu (Copper) .....78.0 - 82.0%
- Sn (Tin) .....2.3 - 3.5%
- Pb (Lead).....6.0 - 8.0%
- Zn (Zinc) .....7.0 - 10.0%
- Fe (Iron) .....0.4% Max.
- Ni (Nickel) .....1.0% Max.
- P (Phosphorus) .....0.2% Max.

BRONZE - ASTM B 584, C84400

Tensile Strength..... 85,000 PSI
Yield .....35,000 PSI
Elongation.....15%

Chemical Composition:
- Cu (Copper).....79.0%
- Al (Aluminum) .....8.5 - 9.5%
- Fe (Iron) .....3.5 - 4.5%
- Mn (Manganese) .....0.8 - 1.5%
- Ni (Nickel) .....4.0 - 5.0%
- Si (Silicon) .....0.10% Max.
- Pb (Lead).....0.03% Max.

KECKLEY

Product Specifications

BASKET STRAINERS

All strainers are to be an approved equal to the Keckley Company strainer Styles Listed Below:

- **Cast iron,** ASTM A 126, Class B
  Threaded end Basket strainer, sizes ½” - 2”
  Rated: Steam 250 PSI @ 406ºF; WOG 400 PSI @ 150ºF
  Standard 304 perforated stainless steel basket. ½” - 2” for WOG - 3/64”, 1/32” perf. for steam service.
  KECKLEY COMPANY Style D

- **Cast iron,** ASTM A 126, Class B
  Flanged end Basket Strainer, sizes 2” - 12”
  Rated: 125 lb. flange Steam 125 PSI @ 450ºF; WOG 200 PSI @ 150ºF
  250 lb. flange Steam 250 PSI @ 450ºF; WOG 500 PSI @ 150ºF
  Standard 304 perforated stainless steel basket.
  Standard for liquid service: 2” - 12”, 1/8”
  Standard for steam service: 2” - 5”, 1/16”; 6” - 12”, 1/8”
  KECKLEY COMPANY Style D

- **Cast iron,** ASTM A 126, Class B
  Flanged end Basket Strainer, sizes 2” - 16”
  Rated: 125 lb. flange 2” - 12” Steam 125 PSI @ 450ºF; WOG 200 PSI @ 150ºF
  125 lb. flange 14” & 16” Steam 100 PSI @ 353ºF; WOG 150 PSI @ 150ºF
  250 lb. flange 2” - 6” Steam 250 PSI @ 450ºF; WOG 500 PSI @ 150ºF
  Standard 304 perforated stainless steel basket.
  Standard for liquid service: 2” - 16”, 1/8”
  Standard for steam service: 2” - 3”, 1/16”; 4” - 16”, 1/8”
  KECKLEY COMPANY Style GFV

Note: For basket strainer styles and sizes not covered above, contact Keckley (800-KECKLEY) and we will write a specification covering your application requirements.

KECKLEY

Product Specifications

"Y" STRAINERS

All strainers are to be an approved equal to the Keckley Company strainer Styles Listed Below:

- **Cast carbon steel,** ASTM A 216, Grade WCB
  Threaded / Socket Weld end Y-Strainer, sizes ¼" - 3"
  Rated: Steam 600 PSI @ 838ºF; WOG 1480 PSI @ 100ºF
  Standard 304 perforated stainless steel screen. ¼" - 3" for Steam - 3/64", WOG - 1/16". Straight threaded cap. Spiral wound stainless steel gasket.
  KECKLEY COMPANY Style SB-7

- **Cast carbon steel,** ASTM A 216, Grade WCB
  Flanged / Butt Weld end Y-Strainer, sizes ½" - 14"
  Rated: 150 lb. flange Steam / BW 150 PSI @ 565ºF; WOG 285 PSI @ 100ºF
  300 lb. flange Steam / BW 300 PSI @ 838ºF; WOG 740 PSI @ 100ºF
  600 lb. flange Steam / BW 600 PSI @ 838ºF; WOG 1480 PSI @ 100ºF
  Standard 304 perforated stainless steel screen. Specify screen perforation or media, see Keckley Binder for recommended perforations.
  Spiral wound stainless steel gasket.
  KECKLEY COMPANY Style SA-7 & SA (600 lb. flange @ 300/600 BW)

- **Cast stainless steel,** ASTM A 351, Grade CF8M
  Flanged / Butt Weld end Y-Strainer, sizes ¼" - 3"
  Rated: Steam 600 PSI @ 1125ºF; WOG 1440 PSI @ 100ºF
  Standard 304 perforated stainless steel screen. ¼" - 3" for Steam - 3/64", WOG - 1/16". Straight threaded cap. Spiral wound stainless steel gasket.
  KECKLEY COMPANY Style SSB-7

- **Cast stainless steel,** ASTM A 351, Grade CF8M
  Flanged / Butt Weld end Y-Strainer, sizes ½" - 12"
  Rated: 150 lb. flange Steam / BW 150 PSI @ 565ºF; WOG 275 PSI @ 100ºF
  300 lb. flange Steam / BW 300 PSI @ 1125ºF; WOG 720 PSI @ 100ºF
  600 lb. flange Steam / BW 600 PSI @ 1125ºF; WOG 1440 PSI @ 100ºF
  Standard 304 perforated stainless steel screen. Specify screen perforation or media, see Keckley Binder for recommended perforations.
  Spiral wound stainless steel gasket.
  KECKLEY COMPANY Style SSA-7 & SSA (600 lb. flange @ 300/600 BW)

  Note: For Y-Strainer styles sand sizes not covered above, contact Keckley (800-KECKLEY) and we will write a specification covering your application requirements.

GOVERNMENT / MILITARY SPECIFICATIONS

"Y" STRAINERS

SPECIFICATION	STYLE	DESCRIPTION
WW-S-2739; Type I	B	⅜" - 4" Threaded, Cast Iron (ASTM A 126, Class B), with brass blow off plug.
WW-S-2739; TYPE II	A	2" - 8" 125 lb. & 250 lb. Flanged, Cast Iron (ASTM A 126, Class B), with brass blow off plug.
NAVSHIPS 810-841499	E-250	⅜" - 3" Silbraze ends, Cast Bronze (ASTM B 62, C83600)

BASKET STRAINERS

SPECIFICATION	STYLE	DESCRIPTION
WW-S-2739; Type I	D	½" - 2" Threaded, Cast Iron (ASTM A 126, Class B), with brass blow off plug.
WW-S-2739; TYPE II	D GFV	2" - 8" 125 lb. & 250 lb. Flanged, Cast Iron (ASTM A 126, Class B), with brass blow off plug.

KECKLEY

Check Valves

Check Valve Product Numbers 2

Valve Configurations 3

Wafer Body Double Disc Check Valve
Style DD 125# Cast Iron Body 2” – 48” 4
Technical Data 5

Style DD 150# Bronze Body 2” – 48” ..... *
Style DD 300# Bronze Body 2” – 48” ..... *

Style DD 150# Nickel Aluminum Bronze Body 2” – 48” ..... *
Style DD 300# Nickel Aluminum Bronze Body 2” – 48” ..... *

Style DD 150# Carbon Steel Body 2” – 48” 6
Style DD 300# Carbon Steel Body 2” – 48” ..... *
Style DD 600# Carbon Steel Body 2” – 42” ..... *
Style DD 900# Carbon Steel Body 2” – 24” ..... *
Style DD 1500# Carbon Steel Body 2” – 24” ..... *

Style DD 150# Stainless Steel Body 2” – 48” 7
Style DD 300# Stainless Steel Body 2” – 48” ..... *
Style DD 600# Stainless Steel Body 2” – 42” ..... *
Style DD 900# Stainless Steel Body 2” – 24” ..... *
Style DD 1500# Stainless Steel Body 2” – 24” ..... *

Wafer Lug Body Double Disc Check Valve
Style DL 150# Bronze Body 2” – 48” ..... *
Style DL 300# Bronze Body 2” – 48” ..... *

Style DL 150# Nickel Aluminum Bronze Body 2” – 48” ..... *
Style DL 300# Nickel Aluminum Bronze Body 2” – 48” ..... *

Style DL 150# Carbon Steel Body 2” – 48” 8
Style DL 300# Carbon Steel Body 2” – 48” ..... *
Style DL 600# Carbon Steel Body 2” – 42” ..... *
Style DL 900# Carbon Steel Body 2” – 24” ..... *
Style DL 1500# Carbon Steel Body 2” – 24” ..... *

Style DL 150# Stainless Steel Body 2” – 48” 9
Style DL 300# Stainless Steel Body 2” – 48” ..... *
Style DL 600# Stainless Steel Body 2” – 42” ..... *
Style DL 900# Stainless Steel Body 2” – 24” ..... *
Style DL 1500# Stainless Steel Body 2” – 24” ..... *

Wafer Double Flange Body Double Disc Check Valve
Style DF 150# Bronze Body 8” – 48” ..... *
Style DF 300# Bronze Body 8” – 48” ..... *

Style DF 150# Nickel Aluminum Bronze Body 8” – 48” ..... *
Style DF 300# Nickel Aluminum Bronze Body 8” – 48” ..... *

Wafer Double Flange Body Double Disc Check Valve (Continued)
Style DF 150# Carbon Steel Body 8” – 48” 10
Style DF 300# Carbon Steel Body 8” – 48” ..... *
Style DF 600# Carbon Steel Body 12” – 42” ..... *
Style DF 900# Carbon Steel Body 12” – 24” ..... *

Style DF 150# Stainless Steel Body 8” – 48” 11
Style DF 300# Stainless Steel Body 8” – 48” ..... *
Style DF 600# Stainless Steel Body 12” – 42” ..... *
Style DF 900# Stainless Steel Body 12” – 24” ..... *

Wafer Center Guided Silent Check Valve
Style CW 125# / 250# Cast Iron Body 2” – 6” 12
Style CW 125# Cast Iron Body 8” – 12” 12
Technical Data 13

Style CW 150# / 300# Carbon Steel Body 2” – 6” 14
Style CW 150# Carbon Steel Body 8” – 12” 14
Style CW 150# / 300# 316 Stainless Steel Body 2” – 6” 15
Style CS 150# 316 Stainless Steel Body 8” – 12” 15

Globe Center Guided Silent Check Valve
Style CG 125# and 250# Cast Iron Body 2” – 24” 16
Technical Data 17

Style CG 150# and 300# Carbon Steel Body 2” – 24” 18
Style CG 150# and 300# Stainless Steel Body 2” – 24” 19

Short Pattern & Long Pattern Wafer Check Valve
Style SP and LP 150# Bronze Body 1-1/2” – 60” ..... *
Style SP and LP 300# Bronze Body 2” – 42” ..... *
Style SP and LP 600# Bronze Body 2” – 36” ..... *
Style SP and LP 900# Bronze Body 2” – 36” ..... *
Style SP and LP 1500# Bronze Body 1-1/2” – 12” ..... *

Style SP and LP 150# Carbon Steel Body 1-1/2” – 60” ..... *
Style SP and LP 300# Carbon Steel Body 2” – 42” ..... *
Style SP and LP 600# Carbon Steel Body 2” – 36” ..... *
Style SP and LP 900# Carbon Steel Body 2” – 36” ..... *
Style SP and LP 1500# Carbon Steel Body 1-1/2” – 12” ..... *

Style SP and LP 150# Stainless Steel Body 1-1/2” – 60” ..... *
Style SP and LP 300# Stainless Steel Body 2” – 42” ..... *
Style SP and LP 600# Stainless Steel Body 2” – 36” ..... *
Style SP and LP 900# Stainless Steel Body 2” – 36” ..... *
Style SP and LP 1500# Stainless Steel Body 1-1/2” – 12” ..... *

Stud & Bolt Dimensions for Wafer Check Valves 20

Head Loss Charts
Style DD, DL, and DF 21
Style CW 22
Style CG 23
Style SP and LP ..... *

*For Additional Pressure Classes and Materials of Construction (Low Carbon Steel, Alloy 20, Hastelloy C276, Monel, and Duplex Stainless Steel) visit www.keckley.com

KECKLEY

HOW TO ORDER

CHECK VALVE PRODUCT NUMBERS

Below Is An Example Of Building A Part Number For Ordering A Check Valve

Size	Valve Style	Body Class	End Connection		Body Material		Disc Material	Seat Material	Spring Material
6”	DD	1	F	-	CI	-	34	1	36

Description: 6” Style DD (Wafer Double Disc Check Valve), 125 Lb. Class, FF Flange, Cast Iron Body, 304 SS Disc, Buna-N Seat, 316 SS Spring.

Product #: 6DD1F-CI-34136

VALVE STYLE

Ordering Number	Valve Style	Ordering Number	Valve Style
DD	Wafer Double Disc Check Valve	CG	Globe Center Guided Silent Check Valve
DL	Wafer Lug Body Double Disc Check Valve	HS	Horizontal Swing Check Valve
DF	Wafer Double Flange Body Double Disc Check Valve	SP	Short Pattern Wafer Check Valve
CW	Wafer Center Guided Silent Check Valve	LP	Long Pattern Wafer Check Valve

*Lug and Double Flange body check valves can be furnished with thru-hole bolting or threaded bolt holes.

BODY CLASS

Ordering Number	ASME Body Class	Ordering Number	ASME Body Class	Ordering Number	ASME Body Class
1	125 Lb. Class ASME	3	250 Lb. Class ASME	5	600 Lb. Class ASME
2	150 Lb. Class ASME	4	300 Lb. Class ASME	6	900 Lb. Class ASME
				7	1500 Lb. Class ASME

END CONNECTION

Ordering Number	End Connection	Ordering Number	End Connection
F	Flat Face	T	FNPT Threaded Ends
R	Raised Face - Spiral Serrated	J	Ring Type Joint

BODY MATERIAL

Ordering Number	Body Material
CI	Cast Iron (ASTM A 126, Class B)
B2	Cast Bronze (ASTM B 62, C83600)
B6*	Bronze
NA	Nickel Aluminum Bronze (ASTM B 148, C95800)
CS	Cast Carbon Steel (ASTM A 216, Grade WCB)
LC	Low Cast Carbon Steel (ASTM A 352, Grade LCB)
36	Cast 316 Stainless Steel (ASTM A 351, Grade CF8M)
A2	Alloy 20 (ASTM A 351, Grade CN7M)
HC	Hastelloy C276 (ASTM A 494, Grade CW12MW)
ML	Monel (ASTM A 494, Grade M35-2)
DP	Duplex (ASTM A 351, Grade CD4MCu)
TI*	Titanium

*Only available for Valve Style SP or LP Wafer Check Valve.

DISC MATERIAL

Ordering Number	Disc Material
34	Cast 304 Stainless Steel (ASTM A 351, Grade CF8)
36	Cast 316 Stainless Steel ASTM A 351, Grade CF8M)
AB	Aluminum Bronze (ASTM B 148, C95200)
B2	Cast Bronze (ASTM B 62, C83600)
B6*	Bronze
NA	Nickel Aluminum Bronze (ASTM B 148, C95800)
CS	Cast Carbon Steel (ASTM A 216, Grade WCB)
LC	Low Cast Carbon Steel (ASTM A 352, Grade LCB)
A2	Alloy 20 (ASTM A 351, Grade CN7M)
HC	Hastelloy C276 (ASTM A 494, Grade CW12MW)
ML	Monel (ASTM A 494, Grade M35-2)
DP	Duplex (ASTM A 351, Grade CD4MCu)
TI*	Titanium

*Only available for Valve Style SP or LP Wafer Check Valve.

SEAT MATERIAL

Ordering Number	Seat Material	Operating Temperature		Ordering Number	Seat Material	Operating Temperature	
		ºF	ºC			ºF	ºC
1	Buna-N	-40 to 250	-40 to 121	6	316L Stainless Steel Overlay	(Same as Body)	
2	Metal (Same as Body)	(Same as Body)		7	410 Stainless Steel Overlay	(Same as Body)	
3	Metal (Same as Disc)	(Same as Disc)		8	PTFE Teflon	-40 to 300	-40 to 149
4	Viton	-15 to 400	-26 to 204	9	Neoprene	-40 to 250	-40 to 121
5	EPDM	-60 to 250	-51 to 121				

SPRING MATERIAL

Ordering Number	Spring Material	Maximum Operating Temperature		Ordering Number	Spring Material	Maximum Operating Temperature	
		ºF	ºC			ºF	ºC
34	Type 304 Stainless Steel	500	260	IN	Inconel	700	371
36	Type 316 Stainless Steel	500	260	IX	Inconel - X 750	1100	593
ML	Monel	450	232				

*Other Materials are Available Upon Request.

Style DD

Wafer Double Disc Check Valve
Sizes 2” – 48”
- •ASME Body Classes 125 – 1500
- •Cast Iron, Bronze, Nickel Aluminum Bronze, Carbon Steel, 316 Stainless Steel, Low Carbon Steel, Alloy 20, Hastelloy C276, Monel, and Duplex.

Style DL

Wafer Lug Body Double Disc Check Valve
Sizes 2” – 48”
- •ASME Body Classes 150 – 1500
- •Bronze, Nickel Aluminum Bronze, Carbon Steel, 316 Stainless Steel, Low Carbon Steel, Alloy 20, Hastelloy C276, Monel, and Duplex.

Style DF

Wafer Double Flange Double Disc Check Valve
Sizes 8” – 48”
- •ASME Body Classes 150 – 900
- •Bronze, Nickel Aluminum Bronze, Carbon Steel, 316 Stainless Steel, Low Carbon Steel, Alloy 20, Hastelloy C276, Monel, and Duplex.

Style CW

Wafer Silent Check Valve
Sizes 2” – 12”
- •ASME Body Classes 125 – 300
- •Cast Iron, Carbon Steel, and 316 Stainless Steel

Style CG

Globe Silent Check Valve
Sizes 2” – 24”
- •ASME Body Classes 125 – 300
- •Cast Iron, Carbon Steel, and 316 Stainless Steel

KECKLEY

Style DD

Wafer Double Disc Check Valve

Carbon Iron (ASTM A 126, Class B)
125 lb. Class

Carbon Steel (ASTM A 216, Grade WCB)
150 lb. Thru 1500 lb. Class

Stainless Steel (ASTM A 351, Grade CF8M)
150 lb. Thru 1500 lb. Class

Style DL

Style DF

APPLICATIONS

Flow reversal solutions for Liquid and Gas applications where protection from flow reversal in a pipeline is required

CONSTRUCTION

Keckley Style DD wafer body double disc check valves are produced by the investment casting process. These castings are thoroughly inspected and machined to exacting specifications. Reference individual technical data pages for standard materials utilized in the construction of valve components.

FEATURES

- A short face-to-face dimension.
- The spring loaded double disc design creates a low cracking pressure and allows for the valve discs to close prior to any flow reversal minimizing water hammer and/or surges in the media.
- Tension on the specially designed spring with extended spring legs allows the disc center section to lift off the seat prior to the outside edge opening preventing seat wear in the center "heel" section of the seating surface.
- Standard elastomeric seats can produce zero leakage when correctly specified, loaded, and installed. Metal seating surfaces are precision machined and lapped to a mirror finish to provide a long lasting seal which meets or exceeds the API 598 leakage standard.
- Retainerless design check valves have no body penetrations eliminating potential leak paths.
- Allows for interchangeability of the hinge pin and stop pin.
- Epoxy coating is standard.
- Field serviceable without the need for special tools.

INSTALLATION

The Style DD can be installed in both vertical and horizontal applications. Contact Keckley for all downward vertical flow installations.

ORDERING

Reference page C2 for Keckley Check Valve Product Numbers.

WORKING PRESSURES - NON SHOCK

NOM. RATING	BODY MATERIAL	MEDIA	2" to 12"	14" to 24"
125#	CAST IRON (ASTM A 126, CLASS B)	W.O.G.	200 PSI @ 150ºF	150 PSI @ 150°F
NOM. RATING	BODY MATERIAL	MEDIA	2" to 24"	
150#	CARBON STEEL (ASTM A 216, GRADE WCB)	W.O.G.	285 PSI @ 100ºF	
	STAINLESS STEEL (ASTM A 351, GRADE CF8M)	W.O.G.	275 PSI @ 100ºF	
NOM. RATING	BODY MATERIAL	MEDIA	2" to 24"	
300#	CARBON STEEL (ASTM A 216, GRADE WCB)	W.O.G.	740 PSI @ 100ºF	
	STAINLESS STEEL (ASTM A 351, GRADE CF8M)	W.O.G.	720 PSI @ 100ºF	

KECKLEY

TECHNICAL DATA
DIMENSIONS AND WEIGHTS

Style DD

Wafer Body
Double Disc Check Valve, 125 lb.
Cast Iron (ASTM A 126, Class B)

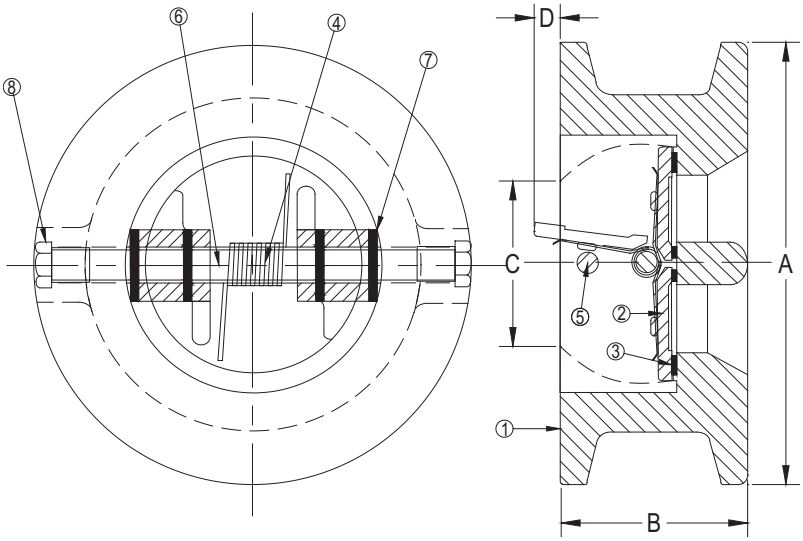

PARTS LIST		
ITEM	DESCRIPTION	MATERIAL
1	Body	Cast Iron (ASTM A 126, Class B)
2	Disc	Stainless Steel (ASTM A 351, Grade CF8M)
3	Seat	Buna-N
4	Spring	Stainless Steel (ASTM A 182, 316)
5	Stop Pin	Stainless Steel (ASTM A 182, 304)
6	Hinge Pin	Stainless Steel (ASTM A 182, 304)
7	Thrust Washer	Teflon
8	Plug	Carbon Steel (ASTM A 307, B)

Above "Standard" Product Number - **DD1F-CI-34136**
Other Options - Reference C2 for available materials.
Note: Contact the factory for all Class 250 requirements.

SIZE		DIMENSIONS								WEIGHTS	
		A		B		C*		D			
in	mm	in	mm	in	mm	in	mm	in	mm	lbs	kgs
2	50	4-1/8	105	2-1/8	54	2-1/16	52	-	-	4	2
2-1/2	65	4-7/8	124	2-1/8	54	2-15/32	63	-	-	6	3
3	80	5-3/8	137	2-1/4	57	3-1/16	78	5/8	16	7	3
4	100	6-7/8	175	2-1/2	64	4	102	1	25	12	6
5	125	7-3/4	197	2-3/4	70	5	127	1-5/16	33	15	7
6	150	8-3/4	222	3	76	6-1/16	154	1-15/16	35	20	9
8	200	11	279	3-3/4	95	8	203	3-7/16	54	40	18
10	250	13-3/8	340	4-1/4	108	10	254	3-3/8	70	65	29
12	300	16-1/8	410	5-5/8	143	11-15/16	303	3-9/16	83	110	50
14	350	17-3/4	451	7-1/4	184	12-1/2	318	3-1/16	83	183	83
16	400	20-1/4	514	7-1/2	191	15	381	4-1/4	113	255	116
18	450	21-5/8	549	8	203	16-7/8	429	5-3/8	137	315	143
20	500	23-7/8	606	8-3/8	213	18-3/16	478	6-3/16	160	380	172
24	600	28-1/4	718	8-3/4	222	22-5/8	575	8-1/4	210	575	261
30	750	34-3/4	883	12	305	29-1/4	743	9-9/16	229	1070	486
36	900	41-1/4	1048	14-1/2	368	35	889	12-5/16	303	1962	890
42	1050	48	1219	17	432	41	1041	15	381	2800	1270
48	1200	54-1/2	1384	20-5/8	524	47	1194	16-3/4	425	3920	1778

*Minimum companion flange bore.

Size 30" and larger fit **Series A** flanges.

Applicable Standards	
•Design API 594	•ASME B16.1
•Testing API 598	•MSS SP-6
	•MSS SP-25

Seat Material	Operating Temperature**	
	°F	°C
Buna-N	-40 to 250	-40 to 121
Viton	-15 to 400	-26 to 204
EPDM	-60 to 250	-51 to 121

**Subject to limitations of body material.

PRESSURE vs. TEMPERATURE CHART

125# Cast Iron (ASTM A 126, Class B)

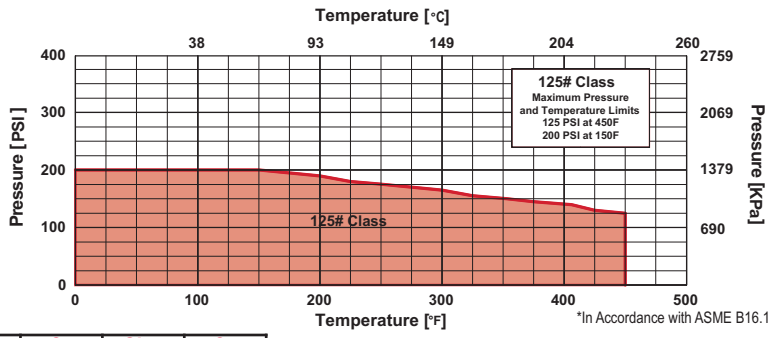

*In Accordance with ASME B16.1

FLOW COEFFICIENTS

Size	C_V	Size	C_V	Size	C_V	Size	C_V	Size	C_V	Size	C_V
2"	48	4"	270	8"	1400	14"	5000	20"	12400	36"	60000
2-1/2"	77	5"	450	10"	2600	16"	7250	24"	20400	42"	89000
3"	135	6"	720	12"	3850	18"	10000	30"	38000	48"	124000

KECKLEY

TECHNICAL DATA
DIMENSIONS AND WEIGHTS

Style DD

Retainlerless Wafer Body
Double Disc Check Valve, 150 lb.
Carbon Steel (ASTM A 216, Grade WCB)

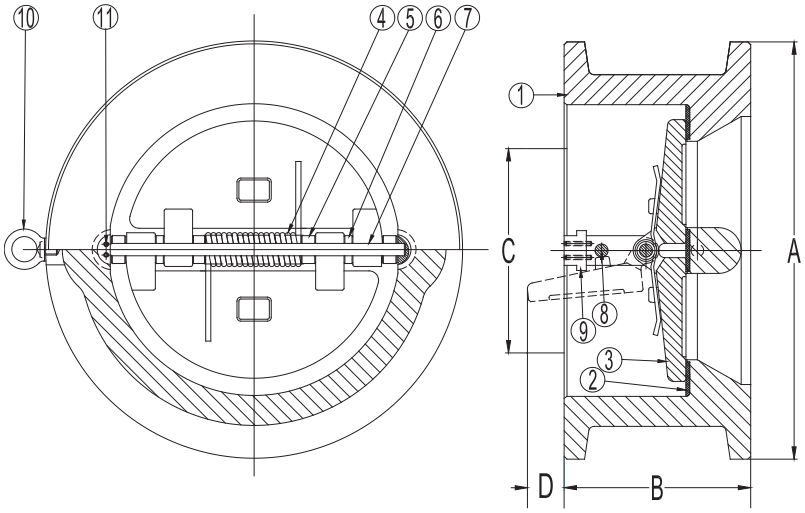

PARTS LIST		
ITEM	DESCRIPTION	MATERIAL
1	Body	Carbon Steel (ASTM A 216, Grade WCB)
2	Seat	Buna-N O-Ring
3	Disc	Stainless Steel (ASTM A 351, Grade CF8M)
4	Spring	Inconel X-750
5	Spring Plate	Stainless Steel (ASTM A 182, Grade F-316)
6	Thrust Washer	Stainless Steel (ASTM A 182, Grade F-316)
7	Hinge Pin	Stainless Steel (ASTM A 182, Grade F-316)
8	Stop Pin	Stainless Steel (ASTM A 182, Grade F-316)
9	Locating Piece	Stainless Steel (ASTM A 182, Grade F-316)
10	Lifting Lug	Carbon Steel
11	Screw	Stainless Steel (316)

Above "Standard" Product Number - **DD2R-CS-361IX**
Other Options - Reference C2 for available materials.
Note: Available in Pressure Class Ranges 150 - 1500 lb.

SIZE		DIMENSIONS								WEIGHTS	
		A		B		C*		D			
in	mm	in	mm	in	mm	in	mm	in	mm	lbs	kgs
2	50	4-1/8	105	2-3/8	60	1-15/16	49	-	-	6	3
2-1/2	65	4-7/8	124	2-5/8	67	2-11/32	60	-	-	10	5
3	80	5-3/8	137	2-7/8	73	2-29/32	74	1/4	6	13	6
4	100	6-7/8	175	2-7/8	73	3-53/64	97	5/8	16	17	8
5	125	7-3/4	197	3-3/8	86	4-13/16	122	7/8	22	27	12
6	150	8-3/4	222	3-7/8	98	5-49/64	146	1-3/8	35	35	16
8	200	11	279	5	127	7-5/8	194	2-1/8	54	70	32
10	250	13-3/8	340	5-3/4	146	9-9/16	243	2-3/4	70	106	48
12	300	16-1/8	410	7-1/8	181	11-3/8	289	3-1/4	83	172	78
14	350	17-3/4	451	7-1/4	184	12-1/2	318	3-1/4	83	200	91
16	400	20-1/4	514	7-1/2	191	15	381	4-7/16	113	275	125
18	450	21-5/8	549	8	203	16-7/8	429	5-3/8	137	315	143
20	500	23-7/8	606	8-5/8	219	18-13/16	478	6-5/16	160	435	197
24	600	28-1/4	718	8-3/4	222	22-5/8	575	8-1/4	210	620	281
30	750	34-3/4	883	13	330	29-1/4	743	9	229	1230	558
36	900	41-1/4	1048	15-1/4	387	35	889	11-15/16	303	2017	915
42	1050	48	1219	17	432	41	1041	15	381	2800	1270
48	1200	54-1/2	1384	20-5/8	524	47	1194	16-3/4	425	3920	1778

*Minimum companion flange bore.

Size 30" and larger fit **Series A** flanges.

Applicable Standards	
•Design API 594	•MSS SP-6
•ASME B16.34	•MSS SP-25
•ASME B16.5	•MSS SP-55
•Testing API 598	•API 6A & 6D as applicable

Seat Material	Operating Temperature**	
	°F	°C
Buna-N	-40 to 250	-40 to 121
Viton	-15 to 400	-26 to 204
EPDM	-60 to 250	-51 to 121

**Subject to limitations of body material.

PRESSURE vs. TEMPERATURE CHART
150# Cast Carbon Steel (ASTM A 216, Grade WCB)

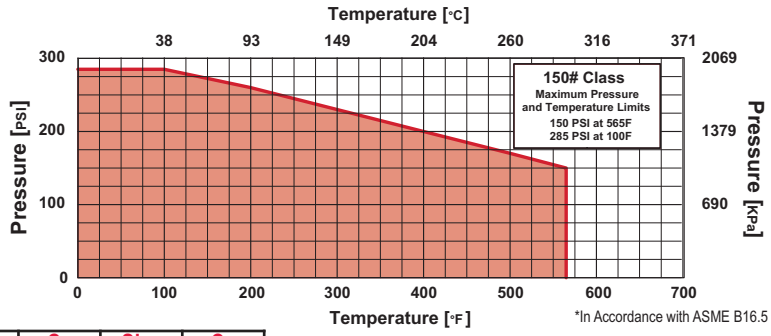

*In Accordance with ASME B16.5

FLOW COEFFICIENTS

Size	C_V	Size	C_V	Size	C_V	Size	C_V	Size	C_V	Size	C_V
2"	48	4"	270	8"	1400	14"	5000	20"	12400	36"	60000
2-1/2"	77	5"	450	10"	2600	16"	7250	24"	20400	42"	89000
3"	135	6"	720	12"	3850	18"	10000	30"	38000	48"	124000

KECKLEY

TECHNICAL DATA
DIMENSIONS AND WEIGHTS

Style DD

Retainlerless Wafer Body
Double Disc Check Valve, 150 lb.
Stainless Steel (ASTM A 351, Grade CF8M)

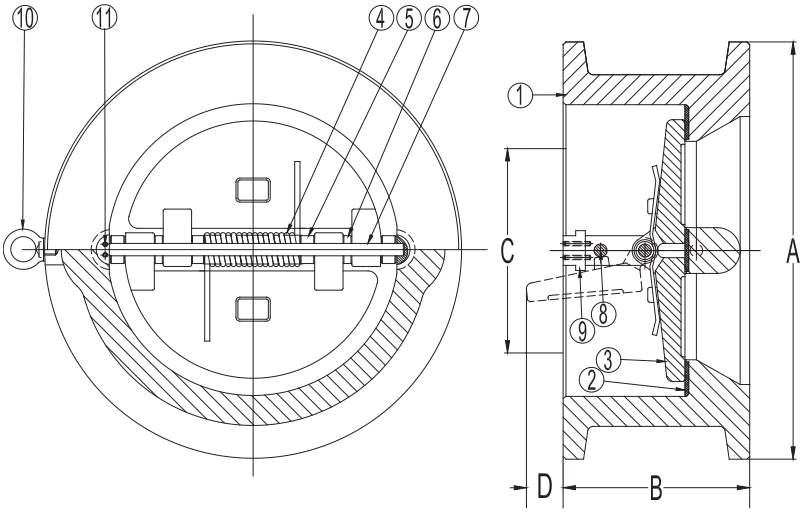

PARTS LIST		
ITEM	DESCRIPTION	MATERIAL
1	Body	Stainless Steel (ASTM A 351, Grade CF8M)
2	Seat	Viton O-Ring
3	Disc	Stainless Steel (ASTM A 351, Grade CF8M)
4	Spring	Inconel X-750
5	Spring Plate	Stainless Steel (ASTM A 182, Grade F-316)
6	Thrust Washer	Stainless Steel (ASTM A 182, Grade F-316)
7	Hinge Pin	Stainless Steel (ASTM A 182, Grade F-316)
8	Stop Pin	Stainless Steel (ASTM A 182, Grade F-316)
9	Locating Piece	Stainless Steel (ASTM A 182, Grade F-316)
10	Lifting Lug	Carbon Steel
11	Screw	Stainless Steel (316)

Above "Standard" Product Number - **DD2R-36-364IX**
Other Options - Reference C2 for available materials.
Note: Available in Pressure Class Ranges 150 - 1500 lb.

SIZE		DIMENSIONS								WEIGHTS	
		A		B		C*		D			
in	mm	in	mm	in	mm	in	mm	in	mm	lbs	kgs
2	50	4-1/8	105	2-3/8	60	1-15/16	49	-	-	6	3
2-1/2	65	4-7/8	124	2-5/8	67	2-11/32	60	-	-	10	5
3	80	5-3/8	137	2-7/8	73	2-29/32	74	1/4	6	13	6
4	100	6-7/8	175	2-7/8	73	3-53/64	97	5/8	16	17	8
5	125	7-3/4	197	3-3/8	86	4-13/16	122	7/8	22	27	12
6	150	8-3/4	222	3-7/8	98	5-49/64	146	1-3/8	35	35	16
8	200	11	279	5	127	7-5/8	194	2-1/8	54	70	32
10	250	13-3/8	340	5-3/4	146	9-9/16	243	2-3/4	70	106	48
12	300	16-1/8	410	7-1/8	181	11-3/8	289	3-1/4	83	172	78
14	350	17-3/4	451	7-1/4	184	12-1/2	318	3-1/4	83	200	91
16	400	20-1/4	514	7-1/2	191	15	381	4-7/16	113	275	125
18	450	21-5/8	549	8	203	16-7/8	429	5-3/8	137	315	143
20	500	23-7/8	606	8-5/8	219	18-13/16	478	6-5/16	160	435	197
24	600	28-1/4	718	8-3/4	222	22-5/8	575	8-1/4	210	620	281
30	750	34-3/4	883	13	330	29-1/4	743	9	229	1230	558
36	900	41-1/4	1048	15-1/4	387	35	889	11-15/16	303	2017	915
42	1050	48	1219	17	432	41	1041	15	381	2800	1270
48	1200	54-1/2	1384	20-5/8	524	47	1194	16-3/4	425	3920	1778

*Minimum companion flange bore.

Size 30" and larger fit **Series A** flanges.

Applicable Standards	
•Design API 594	•MSS SP-6
•ASME B16.34	•MSS SP-25
•ASME B16.5	•MSS SP-55
•Testing API 598	•API 6A & 6D as applicable

Seat Material	Operating Temperature**	
	°F	°C
Buna-N	-40 to 250	-40 to 121
Viton	-15 to 400	-26 to 204
EPDM	-60 to 250	-51 to 121

**Subject to limitations of body material.

PRESSURE vs. TEMPERATURE CHART

150# Cast 316 Stainless Steel (ASTM A 351, Grade CF8M)

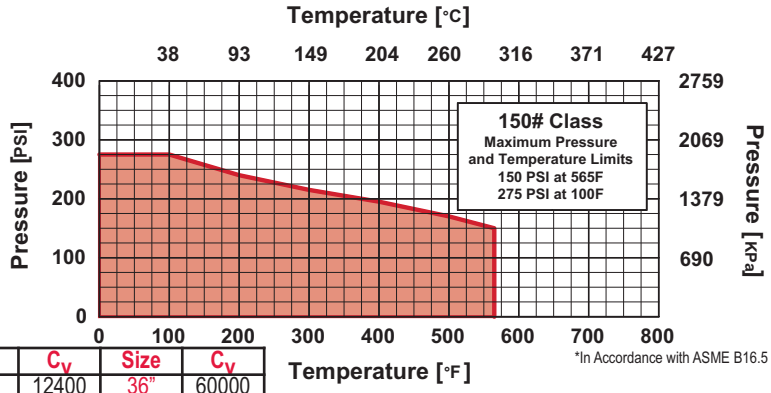

*In Accordance with ASME B16.5

FLOW COEFFICIENTS

Size	C_V	Size	C_V	Size	C_V	Size	C_V	Size	C_V	Size	C_V
2"	48	4"	270	8"	1400	14"	5000	20"	12400	36"	60000
2-1/2"	77	5"	450	10"	2600	16"	7250	24"	20400	42"	89000
3"	135	6"	720	12"	3850	18"	10000	30"	38000	48"	124000

KECKLEY

TECHNICAL DATA
DIMENSIONS AND WEIGHTS

Style DL

Retainlerless Wafer Lug Body
Double Disc Check Valve, 150 lb.
Carbon Steel (ASTM A 216, Grade WCB)

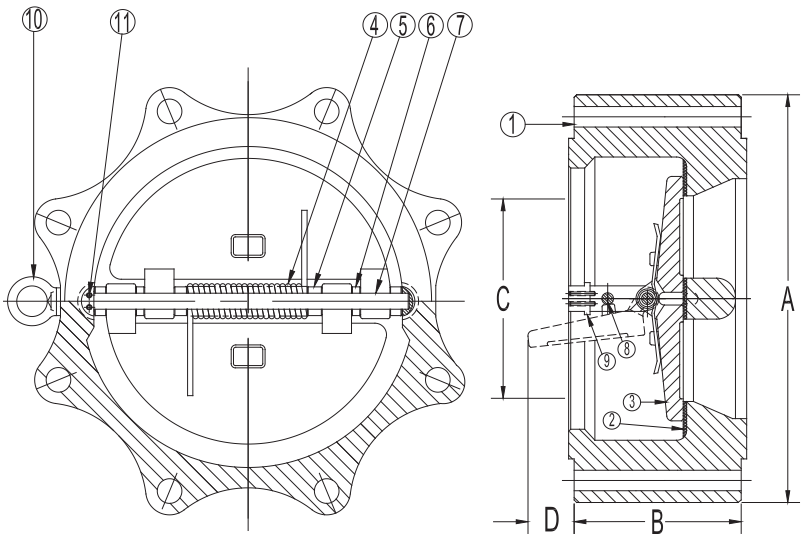

PARTS LIST		
ITEM	DESCRIPTION	MATERIAL
1	Body	Carbon Steel (ASTM A 216, Grade WCB)
2	Seat	Buna-N O-Ring
3	Disc	Stainless Steel (ASTM A 351, Grade CF8M)
4	Spring	Inconel X-750
5	Spring Plate	Stainless Steel (ASTM A 182, Grade F-316)
6	Thrust Washer	Stainless Steel (ASTM A 182, Grade F-316)
7	Hinge Pin	Stainless Steel (ASTM A 182, Grade F-316)
8	Stop Pin	Stainless Steel (ASTM A 182, Grade F-316)
9	Locating Piece	Stainless Steel (ASTM A 182, Grade F-316)
10	Lifting Lug	Carbon Steel
11	Screw	Stainless Steel (316)

Above "Standard" Product Number - **DL2R-CS-361IX**
Other Options - Reference C2 for available materials.
Note: Available in Pressure Class Ranges 150 - 1500 lb.

SIZE		DIMENSIONS						WEIGHTS	
		A		B		C*			
in	mm	in	mm	in	mm	in	mm	lbs	kgs
2	50	4-1/8	105	2-3/8	60	1-15/16	49	18	8
2-1/2	65	4-7/8	124	2-5/8	67	2-11/32	60	22	10
3	80	5-3/8	137	2-7/8	73	2-29/32	74	30	14
4	100	6-7/8	175	2-7/8	73	3-53/64	97	44	20
5	125	7-3/4	197	3-3/8	86	4-13/16	122	51	23
6	150	8-3/4	222	3-7/8	98	5-49/64	146	84	38
8	200	11	279	5	127	7-1/2	191	91	41
10	250	13-3/8	340	5-3/4	146	9-7/16	240	156	71
12	300	16-1/8	410	7-1/8	181	11-1/4	286	252	114
14	350	17-3/4	451	7-1/4	184	12-5/8	321	291	132
16	400	20-1/4	514	7-1/2	191	14-11/16	373	464	210
18	450	21-5/8	549	8	203	16-9/16	421	431	195
20	500	23-7/8	606	8-5/8	219	18-7/16	468	501	227
24	600	28-1/4	718	8-3/4	222	21-5/8	549	682	309
30	750	34-3/4	883	12	305	28-7/16	722	1321	599
36	900	41-1/4	1048	14-1/2	368	34-3/8	873	1898	861
42	1050	48	1219	17	432	40-9/16	1030	3236	1468
48	1200	54-1/2	1384	20-5/8	524	44-3/16	1122	4899	2222

*Minimum companion flange bore.

Available with thru-hole bolting or threaded bolt holes.

Applicable Standards	
•Design API 594	•MSS SP-6
•ASME B16.34	•MSS SP-25
•ASME B16.5	•MSS SP-55
•Testing API 598	•API 6A & 6D as applicable

Seat Material	Operating Temperature**	
	°F	°C
Buna-N	-40 to 250	-40 to 121
Viton	-15 to 400	-26 to 204
EPDM	-60 to 250	-51 to 121

**Subject to limitations of body material.

PRESSURE vs. TEMPERATURE CHART
150# Cast Carbon Steel (ASTM A 216, Grade WCB)

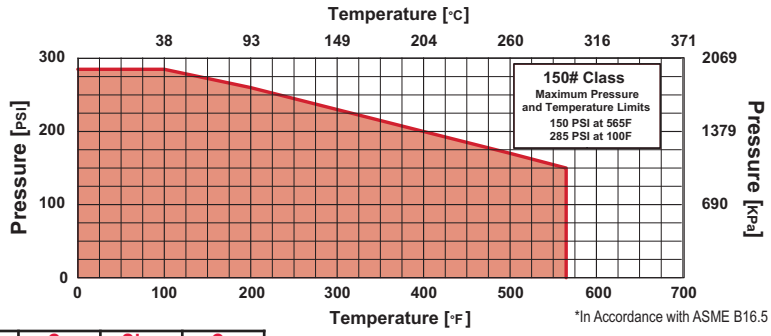

*In Accordance with ASME B16.5

FLOW COEFFICIENTS

Size	C_V	Size	C_V	Size	C_V	Size	C_V	Size	C_V	Size	C_V
2"	48	4"	270	8"	1400	14"	5000	20"	12400	36"	60000
2-1/2"	77	5"	450	10"	2600	16"	7250	24"	20400	42"	89000
3"	135	6"	720	12"	3850	18"	10000	30"	38000	48"	124000

KECKLEY

TECHNICAL DATA
DIMENSIONS AND WEIGHTS

Style DL

Retainlerless Wafer Lug Body
Double Disc Check Valve, 150 lb.
Stainless Steel (ASTM A 351, Grade CF8M)

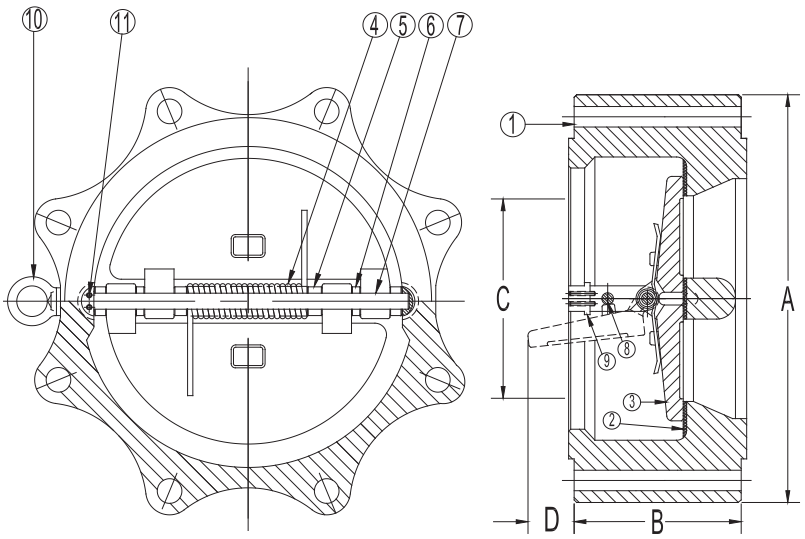

PARTS LIST		
ITEM	DESCRIPTION	MATERIAL
1	Body	Stainless Steel (ASTM A 351, Grade CF8M)
2	Seat	Viton O-Ring
3	Disc	Stainless Steel (ASTM A 351, Grade CF8M)
4	Spring	Inconel X-750
5	Spring Plate	Stainless Steel (ASTM A 182, Grade F-316)
6	Thrust Washer	Stainless Steel (ASTM A 182, Grade F-316)
7	Hinge Pin	Stainless Steel (ASTM A 182, Grade F-316)
8	Stop Pin	Stainless Steel (ASTM A 182, Grade F-316)
9	Locating Piece	Stainless Steel (ASTM A 182, Grade F-316)
10	Lifting Lug	Carbon Steel
11	Screw	Stainless Steel (316)

Above "Standard" Product Number - **DL2R-36-364IX**
Other Options - Reference C2 for available materials.
Note: Available in Pressure Class Ranges 150 - 1500 lb.

SIZE		DIMENSIONS						WEIGHTS	
		A		B		C*			
in	mm	in	mm	in	mm	in	mm	lbs	kgs
2	50	4-1/8	105	2-3/8	60	1-15/16	49	18	8
2-1/2	65	4-7/8	124	2-5/8	67	2-11/32	60	22	10
3	80	5-3/8	137	2-7/8	73	2-29/32	74	30	14
4	100	6-7/8	175	2-7/8	73	3-53/64	97	44	20
5	125	7-3/4	197	3-3/8	86	4-13/16	122	51	23
6	150	8-3/4	222	3-7/8	98	5-49/64	146	84	38
8	200	11	279	5	127	7-1/2	191	91	41
10	250	13-3/8	340	5-3/4	146	9-7/16	240	156	71
12	300	16-1/8	410	7-1/8	181	11-1/4	286	252	114
14	350	17-3/4	451	7-1/4	184	12-5/8	321	291	132
16	400	20-1/4	514	7-1/2	191	14-11/16	373	464	210
18	450	21-5/8	549	8	203	16-9/16	421	431	195
20	500	23-7/8	606	8-5/8	219	18-7/16	468	501	227
24	600	28-1/4	718	8-3/4	222	21-5/8	549	682	309
30	750	34-3/4	883	12	305	28-7/16	722	1321	599
36	900	41-1/4	1048	14-1/2	368	34-3/8	873	1898	861
42	1050	48	1219	17	432	40-9/16	1030	3236	1468
48	1200	54-1/2	1384	20-5/8	524	44-3/16	1122	4899	2222

*Minimum companion flange bore.

Available with thru-hole bolting or threaded bolt holes.

Applicable Standards	
•Design API 594	•MSS SP-6
•ASME B16.34	•MSS SP-25
•ASME B16.5	•MSS SP-55
•Testing API 598	•API 6A & 6D as applicable

Seat Material	Operating Temperature**	
	°F	°C
Buna-N	-40 to 250	-40 to 121
Viton	-15 to 400	-26 to 204
EPDM	-60 to 250	-51 to 121

**Subject to limitations of body material.

PRESSURE vs. TEMPERATURE CHART
150# Cast 316 Stainless Steel (ASTM A 351, Grade CF8M)

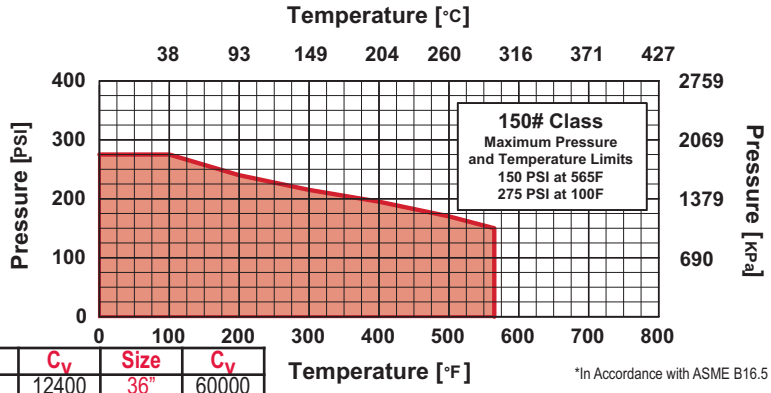

*In Accordance with ASME B16.5

FLOW COEFFICIENTS

Size	C_V	Size	C_V	Size	C_V	Size	C_V	Size	C_V	Size	C_V
2"	48	4"	270	8"	1400	14"	5000	20"	12400	36"	60000
2-1/2"	77	5"	450	10"	2600	16"	7250	24"	20400	42"	89000
3"	135	6"	720	12"	3850	18"	10000	30"	38000	48"	124000

KECKLEY

TECHNICAL DATA
DIMENSIONS AND WEIGHTS

Style DF

Retainlerless Wafer Double Flange Body Double Disc Check Valve, 150 lb. Carbon Steel (ASTM A 216, Grade WCB)

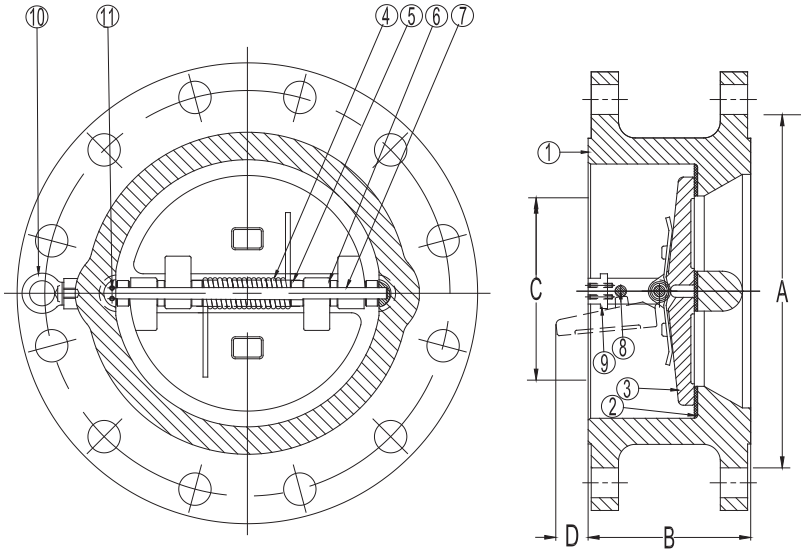

PARTS LIST		
ITEM	DESCRIPTION	MATERIAL
1	Body	Carbon Steel (ASTM A 216, Grade WCB)
2	Seat	Buna-N O-Ring
3	Disc	Stainless Steel (ASTM A 351, Grade CF8M)
4	Spring	Inconel X-750
5	Spring Plate	Stainless Steel (ASTM A 182, Grade F-316)
6	Thrust Washer	Stainless Steel (ASTM A 182, Grade F-316)
7	Hinge Pin	Stainless Steel (ASTM A 182, Grade F-316)
8	Stop Pin	Stainless Steel (ASTM A 182, Grade F-316)
9	Locating Piece	Stainless Steel (ASTM A 182, Grade F-316)
10	Lifting Lug	Carbon Steel
11	Screw	Stainless Steel (316)

Above "Standard" Product Number - **DF2R-CS-361IX**
Other Options - Reference C2 for available materials.
Note: Available in Pressure Class Ranges 150 - 900 lb.

SIZE		DIMENSIONS						WEIGHTS	
		A		B		C*			
in	mm	in	mm	in	mm	in	mm	lbs	kgs
8	200	11	279	5	127	7-5/8	194	93	42
10	250	13-3/8	340	5-3/4	146	9-9/16	243	189	86
12	300	16-1/8	410	7-1/8	181	11-3/8	289	308	140
14	350	17-3/4	451	7-1/4	184	12-1/2	318	352	160
16	400	20-1/4	514	7-1/2	191	15	381	496	225
18	450	21-5/8	549	8	203	16-7/8	428	551	250
20	500	23-7/8	606	8-5/8	219	18-7/8	480	661	300
24	600	28-1/4	718	8-3/4	222	22-5/8	575	860	389
30	750	34-3/4	883	12	305	29-1/4	743	1512	687
36	900	41-1/4	1048	14-1/2	368	35	889	2525	1145
42	1050	48	1219	17	432	41	1041	4163	1888
48	1200	54-1/2	1384	20-5/8	524	47	1194	5880	2667

*Minimum companion flange bore.
Available with thru-hole bolting or threaded bolt holes.

Sizes 30" and larger fit **Series A** flanges.

Applicable Standards	
•Design API 594	•MSS SP-6
•ASME B16.34	•MSS SP-25
•ASME B16.5	•MSS SP-55
•Testing API 598	•API 6A & 6D as applicable

Seat Material	Operating Temperature**	
	°F	°C
Buna-N	-40 to 250	-40 to 121
Viton	-15 to 400	-26 to 204
EPDM	-60 to 250	-51 to 121

**Subject to limitations of body material.

PRESSURE vs. TEMPERATURE CHART

150# Cast Carbon Steel (ASTM A 216, Grade WCB)

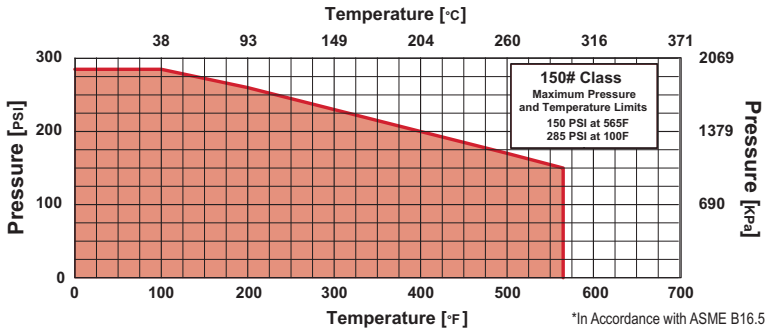

*In Accordance with ASME B16.5

FLOW COEFFICIENTS

Size	C_V	Size	C_V	Size	C_V	Size	C_V
8"	1400	14"	5000	20"	12400	36"	60000
10"	2600	16"	7250	24"	20400	42"	89000
12"	3850	18"	10000	30"	38000	48"	124000

KECKLEY

TECHNICAL DATA
DIMENSIONS AND WEIGHTS

Style DF

Retainlerless Wafer Double Flange Body Double Disc Check Valve, 150 lb. Stainless Steel (ASTM A 351, Grade CF8M)

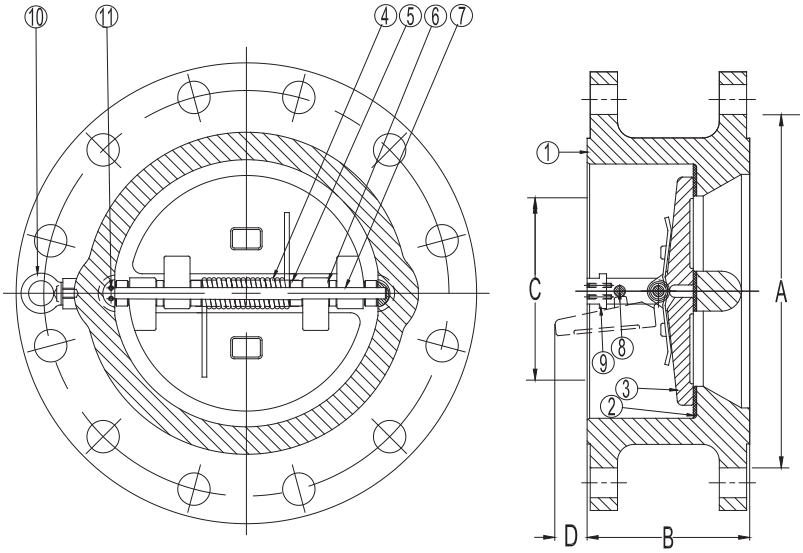

PARTS LIST		
ITEM	DESCRIPTION	MATERIAL
1	Body	Stanless Steel (ASTM A 351, Grade CF8M)
2	Seat	Viton O-Ring
3	Disc	Stainless Steel (ASTM A 351, Grade CF8M)
4	Spring	Inconel X-750
5	Spring Plate	Stainless Steel (ASTM A 182, Grade F-316)
6	Thrust Washer	Stainless Steel (ASTM A 182, Grade F-316)
7	Hinge Pin	Stainless Steel (ASTM A 182, Grade F-316)
8	Stop Pin	Stainless Steel (ASTM A 182, Grade F-316)
9	Locating Piece	Stainless Steel (ASTM A 182, Grade F-316)
10	Lifting Lug	Carbon Steel
11	Screw	Stainless Steel (316)

Above "Standard" Product Number - **DF2R-36-364IX**
Other Options - Reference C2 for available materials.
Note: Available in Pressure Class Ranges 150 - 900 lb.

SIZE		DIMENSIONS						WEIGHTS	
		A		B		C*			
in	mm	in	mm	in	mm	in	mm	lbs	kgs
8	200	11	279	5	127	7-5/8	194	93	42
10	250	13-3/8	340	5-3/4	146	9-9/16	243	189	86
12	300	16-1/8	410	7-1/8	181	11-3/8	289	308	140
14	350	17-3/4	451	7-1/4	184	12-1/2	318	352	160
16	400	20-1/4	514	7-1/2	191	15	381	496	225
18	450	21-5/8	549	8	203	16-7/8	428	551	250
20	500	23-7/8	606	8-5/8	219	18-7/8	480	661	300
24	600	28-1/4	718	8-3/4	222	22-5/8	575	860	389
30	750	34-3/4	883	12	305	29-1/4	743	1512	687
36	900	41-1/4	1048	14-1/2	368	35	889	2525	1145
42	1050	48	1219	17	432	41	1041	4163	1888
48	1200	54-1/2	1384	20-5/8	524	47	1194	5880	2667

*Minimum companion flange bore.
Available with thru-hole bolting or threaded bolt holes.

Sizes 30" and larger fit **Series A** flanges.

Applicable Standards	
•Design API 594	•MSS SP-6
•ASME B16.34	•MSS SP-25
•ASME B16.5	•MSS SP-55
•Testing API 598	•API 6A & 6D as applicable

Seat Material	Operating Temperature**	
	°F	°C
Buna-N	-40 to 250	-40 to 121
Viton	-15 to 400	-26 to 204
EPDM	-60 to 250	-51 to 121

**Subject to limitations of body material.

FLOW COEFFICIENTS

Size	C_V	Size	C_V	Size	C_V	Size	C_V
8"	1400	14"	5000	20"	12400	36"	60000
10"	2600	16"	7250	24"	20400	42"	89000
12"	3850	18"	10000	30"	38000	48"	124000

PRESSURE vs. TEMPERATURE CHART

150# Cast 316 Stainless Steel (ASTM A 351, Grade CF8M)

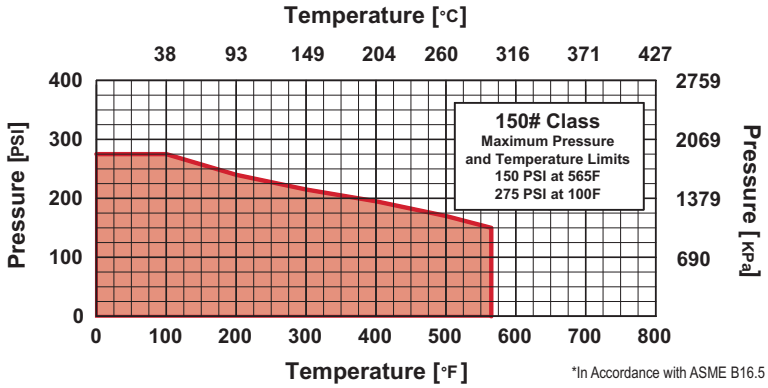

*In Accordance with ASME B16.5

KECKLEY

Style CW

Cast Iron (ASTM A 126, Class B)

125 lb. / 250 lb.

Sizes 2" - 6" are 125/250 lb. Class dual rated.
Sizes 8" - 12" are 125 lb. Class

Carbon Steel (ASTM A 216, Grade WCB)

150 lb. / 300 lb.

Sizes 2" - 6" are 150/300 lb. Class dual rated.
Sizes 8" - 12" are 150 lb. Class

Stainless Steel (ASTM A 351, Grade CF8M)

150 lb. / 300 lb.

Sizes 2" - 6" are 150/300 lb. Class dual rated.
Sizes 8" - 12" are 150 lb. Class

Compact Wafer Center Guided Silent Check Valve

APPLICATIONS

Liquid applications where protection from flow reversal in a pipeline is required. These are not recommended for steam service or any reciprocating pump/compressor applications which can result in thermal or physical shock.

CONSTRUCTION

Keckley Style CW wafer center guided silent check valves are produced by the investment casting process. These castings are thoroughly inspected and machined to exacting specifications. Reference individual technical data pages for standard materials utilized in the construction of valve components.

FEATURES

- A short face-to-face dimension.
- A spring automatically closes the disc just prior to zero flow velocity; this prevents any flow reversal or water hammer while minimizing the possibility of "slamming" and/or "surges" in the media.
- The disc is centered and guided, on the inlet by the seat and the discharge side by a bushing, to prevent any potential binding or cocking of the disc during valve cycling.
- Standard metal seats are precision machined and lapped to a mirror finish to provide a long lasting seal which meets or exceeds the API 598 leakage standard. Optional soft seating materials can be provided to produce zero leakage when correctly specified, loaded, and installed.
- Designed for a miniumum open area equal to 110% of the pipe size.
- All sizes feature discs, which lift 1/3 of an inch from their seats for every 1" of pipe size.
- Epoxy coating is standard.
- Field serviceable without the need for special tools.

INSTALLATION

The Style CW can be installed in both vertical and horizontal applications. Contact Keckley for all downward vertical flow installations.

ORDERING

Reference page C2 for Keckley Check Valve Product Numbers.

WORKING PRESSURES - NON SHOCK

NOM. RATING	BODY MATERIAL	MEDIA	2" to 12"
125#	CAST IRON (ASTM A 126, CLASS B)	W.O.G.	200 PSI @ 150ºF
NOM. RATING	**BODY MATERIAL**	**MEDIA**	**2" to 6"**
250#	CAST IRON (ASTM A 126, CLASS B)	W.O.G.	500 PSI @ 150ºF
NOM. RATING	**BODY MATERIAL**	**MEDIA**	**2" to 12"**
150#	CARBON STEEL (ASTM A 216, GRADE WCB)	W.O.G.	285 PSI @ 100ºF
	STAINLESS STEEL (ASTM A 351, GRADE CF8M)	W.O.G.	275 PSI @ 100ºF
NOM. RATING	**BODY MATERIAL**	**MEDIA**	**2" to 6"**
300#	CARBON STEEL (ASTM A 216, GRADE WCB)	W.O.G.	740 PSI @ 100ºF
	STAINLESS STEEL (ASTM A 351, GRADE CF8M)	W.O.G.	720 PSI @ 100ºF

KECKLEY

TECHNICAL DATA
DIMENSIONS AND WEIGHTS

Style CW

Wafer Silent Check Valve, 125 lb. / 250 lb. Sizes 2” - 6” 125/250 lb. Class dual rated, Sizes 8” - 12” 125 lb. Class

Illustration is representative of sizes 2” - 6” only.

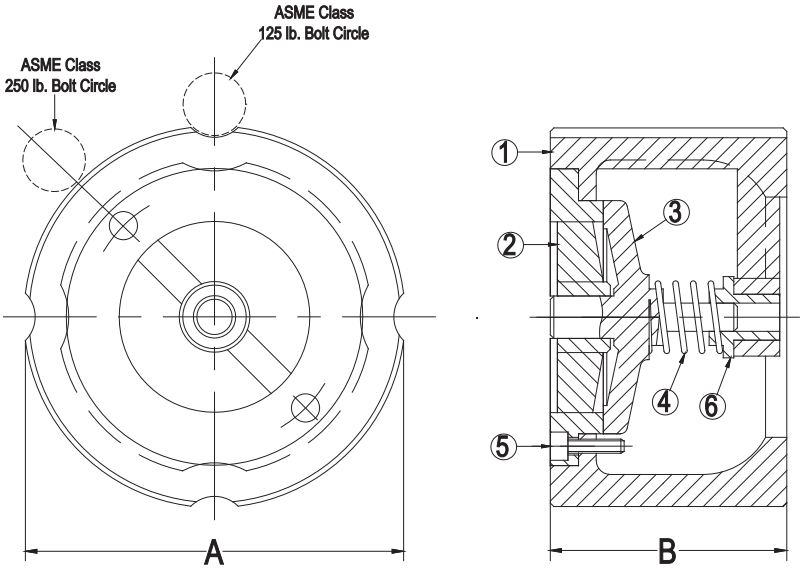

PARTS LIST		
ITEM	DESCRIPTION	MATERIAL
1	Body	Cast Iron (ASTM A 126, Class B)
2	Seat	Cast Bronze (ASTM B 62, C83600)
3	Disc	Cast Bronze (ASTM B 62, C83600)
4	Spring	Stainless Steel (ASTM A 182, Grade F-304)
5	Screw	Stainless Steel (ASTM A 182, Grade F-304)
6	Bushing	Stainless Steel (ASTM A 182, Grade F-304)

Above “Standard” Product Number - **CW1F-CI-B2334** (125# Class)
Other Options - Reference C2 for available materials.

SIZE		DIMENSIONS				WEIGHTS		BOLT DIAMETERS	
		A		B					
		125#		125#		125#		125#	250#
in	mm	in	mm	in	mm	lbs	kgs	Bolt Diameter	Bolt Diameter
2	50	4-1/4	108	2-5/8	67	5	2	5/8”	5/8”
2-1/2	65	5	127	2-7/8	73	8	4	5/8”	3/4”
3	80	5-3/4	146	3-1/8	79	10	5	5/8”	3/4”
4	100	7	178	4	102	18	8	5/8”	3/4”
5	125	8-3/8	213	4-5/8	117	29	13	3/4”	3/4”
6	150	9-3/4	248	5-9/16	141	42	19	3/4”	3/4”
8*	200	13-1/2	343	6-1/2	165	85	39	3/4”	--
10*	250	16	406	8-1/4	210	160	73	7/8”	--
12*	300	19-1/4	489	11-1/4	286	340	154	7/8”	--

*Sizes 8”, 10”, and 12” are not scalloped, but are drilled and tapped for cap screws.
†This table reflects only the nearest metric equivalents.

Applicable Standards	
•Design MSS SP-125*	•Testing API 598
•ASME B16.1	•MSS SP-6
	•MSS SP-25

Seat Material	Operating Temperature**	
	°F	°C
Buna-N	-40 to 250	-40 to 121
Viton	-15 to 400	-26 to 204
EPDM	-60 to 250	-51 to 121

**Subject to limitations of body material.

FLOW COEFFICIENTS

Size	C_V	Size	C_V	Size	C_V
2”	58	4”	210	8”	740
2-1/2”	90	5”	300	10”	1250
3”	134	6”	430	12”	1800

PRESSURE vs. TEMPERATURE CHART
125# & 250# Cast Iron (ASTM A 126, Class B)

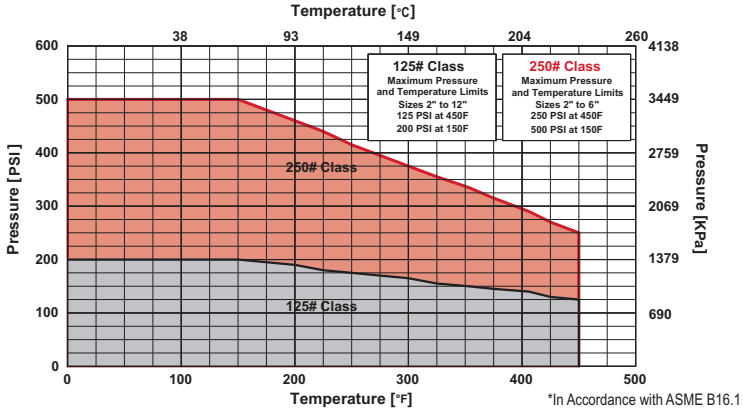

*In Accordance with ASME B16.1

KECKLEY

TECHNICAL DATA
DIMENSIONS AND WEIGHTS

Style CW

Wafer Silent Check Valve, 150 lb. / 300 lb. Sizes 2” - 6” 150/300 lb. Class dual rated, Sizes 8” - 12” 150 lb. Class

Illustration is representative of sizes 2” - 6” only.

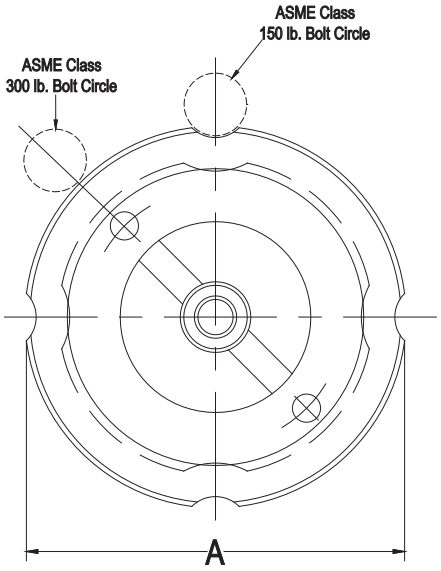

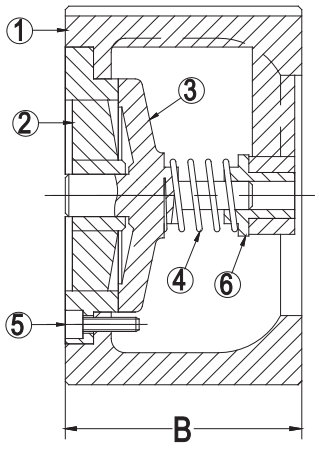

PARTS LIST		
ITEM	DESCRIPTION	MATERIAL
1	Body	Carbon Steel (ASTM A 216, Grade WCB)
2	Seat	Stainless Steel (ASTM A 351, Grade CF8M)
3	Disc	Stainless Steel (ASTM A 351, Grade CF8M)
4	Spring	Stainless Steel (ASTM A 182, Grade F-316)
5	Screw	Stainless Steel (ASTM A 182, Grade F-316)
6	Bushing	Stainless Steel (ASTM A 182, Grade F-316)

Above “Standard” Product Number - **CW2R-CS-36336** (150# Class)
Other Options - Reference C2 for available materials.

SIZE		DIMENSIONS				WEIGHTS		BOLT DIAMETERS	
		A		B					
		150#		150#		150#		150#	300#
in	mm	in	mm	in	mm	lbs	kgs	Bolt Diameter	Bolt Diameter
2	50	4-1/4	108	2-5/8	67	5	2	5/8”	5/8”
2-1/2	65	5	127	2-7/8	73	8	4	5/8”	3/4”
3	80	5-3/4	146	3-1/8	79	10	5	5/8”	3/4”
4	100	7	178	4	102	18	8	5/8”	3/4”
5	125	8-3/8	213	4-5/8	117	29	13	3/4”	3/4”
6	150	9-3/4	248	5-9/16	141	42	19	3/4”	3/4”
8*	200	13-1/2	343	6-1/2	165	85	39	3/4”	--
10*	250	16	406	8-1/4	210	160	73	7/8”	--
12*	300	19-1/4	489	11-1/4	286	340	154	7/8”	--

*Sizes 8”, 10”, and 12” are not scalloped, but are drilled and tapped for cap screws.
†This table reflects only the nearest metric equivalents.

Applicable Standards	
•Design MSS SP-126	•Testing API 598
•ASME B16.34	•MSS SP-6
•ASME B16.5	•MSS SP-25
	•MSS SP-55

Seat Material	Operating Temperature**	
	°F	°C
Buna-N	-40 to 250	-40 to 121
Viton	-15 to 400	-26 to 204
EPDM	-60 to 250	-51 to 121

**Subject to limitations of body material.

FLOW COEFFICIENTS

Size	C_V	Size	C_V	Size	C_V
2”	58	4”	210	8”	740
2-1/2”	90	5”	300	10”	1250
3”	134	6”	430	12”	1800

PRESSURE vs. TEMPERATURE CHART

150# & 300# Carbon Steel (ASTM A 216, Grade WCB)

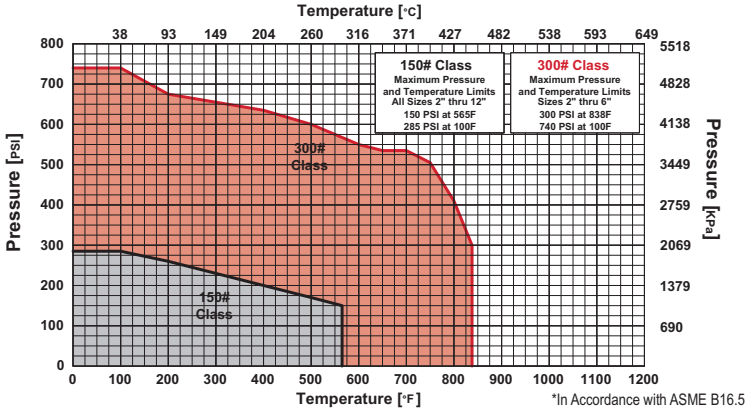

*In Accordance with ASME B16.5

Note: Keckley 300# CW’s are not recommended for prolonged usage above 800ºF (427ºC).

KECKLEY

TECHNICAL DATA
DIMENSIONS AND WEIGHTS

Style CW

Wafer Silent Check Valve, 150 lb. / 300 lb. Sizes 2” - 6” 150/300 lb. Class dual rated, Sizes 8” - 12” 150 lb. Class

Illustration is representative of sizes 2” - 6” only.

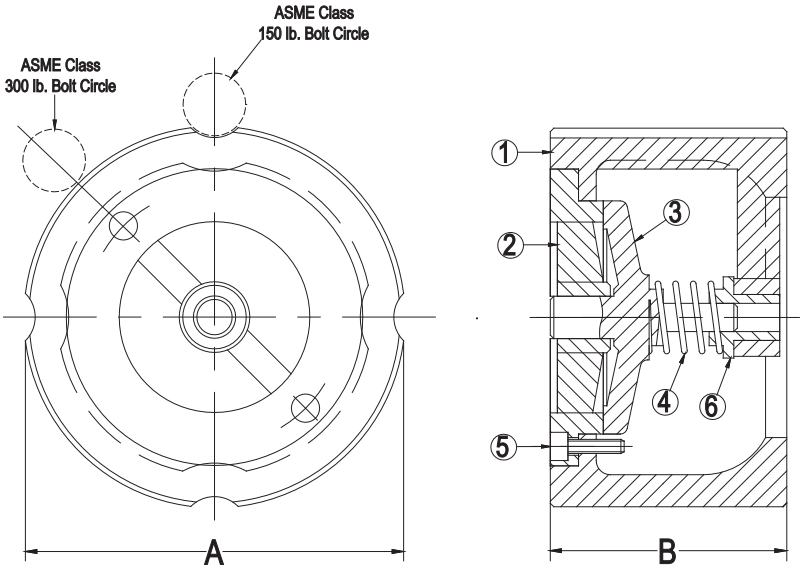

PARTS LIST		
ITEM	DESCRIPTION	MATERIAL
1	Body	Stainless Steel (ASTM A 351, Grade CF8M)
2	Seat	Stainless Steel (ASTM A 351, Grade CF8M)
3	Disc	Stainless Steel (ASTM A 351, Grade CF8M)
4	Spring	Stainless Steel (ASTM A 182, Grade F-316)
5	Screw	Stainless Steel (ASTM A 182, Grade F-316)
6	Bushing	Stainless Steel (ASTM A 182, Grade F-316)

Above “Standard” Product Number - **CW2R-36-36336** (150# Class)
Other Options - Reference C2 for available materials.

SIZE		DIMENSIONS				WEIGHTS		BOLT DIAMETERS	
		A		B					
		150#		150#		150#		150#	300#
in	mm	in	mm	in	mm	lbs	kgs	Bolt Diameter	Bolt Diameter
2	50	4-1/4	108	2-5/8	67	5	2	5/8”	5/8”
2-1/2	65	5	127	2-7/8	73	8	4	5/8”	3/4”
3	80	5-3/4	146	3-1/8	79	10	5	5/8”	3/4”
4	100	7	178	4	102	18	8	5/8”	3/4”
5	125	8-3/8	213	4-5/8	117	29	13	3/4”	3/4”
6	150	9-3/4	248	5-9/16	141	42	19	3/4”	3/4”
8*	200	13-1/2	343	6-1/2	165	85	39	3/4”	--
10*	250	16	406	8-1/4	210	160	73	7/8”	--
12*	300	19-1/4	489	11-1/4	286	340	154	7/8”	--

*Sizes 8”, 10”, and 12” are not scalloped, but are drilled and tapped for cap screws.
†This table reflects only the nearest metric equivalents.

Applicable Standards	
•Design MSS SP-126	•Testing API 598
•ASME B16.34	•MSS SP-6
•ASME B16.5	•MSS SP-25
	•MSS SP-55

Seat Material	Operating Temperature**	
	°F	°C
Buna-N	-40 to 250	-40 to 121
Viton	-15 to 400	-26 to 204
EPDM	-60 to 250	-51 to 121

**Subject to limitations of body material.

FLOW COEFFICIENTS

Size	C_V	Size	C_V	Size	C_V
2”	58	4”	210	8”	740
2-1/2”	90	5”	300	10”	1250
3”	134	6”	430	12”	1800

PRESSURE vs. TEMPERATURE CHART

150# & 300# Cast 316 Stainless Steel (ASTM A 351, Grade CF8M)

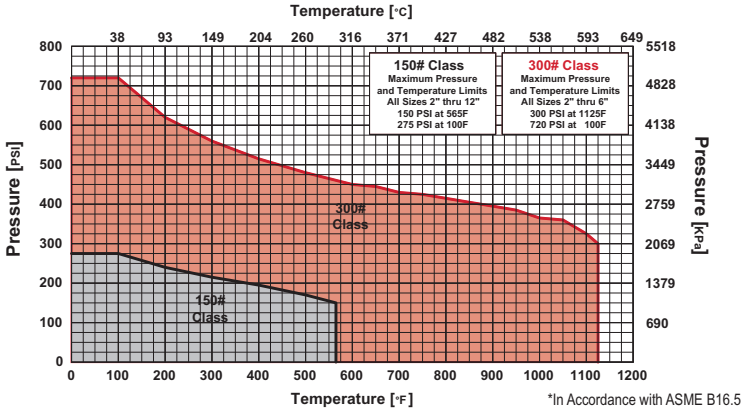

*In Accordance with ASME B16.5

Note: Keckley 300# CW’s are not recommended for prolonged usage above 1000ºF (583ºC).

KECKLEY

Style CG

Globe Silent Check Valve

Cast Iron (ASTM A 126, Class B)
125 lb. & 250 lb. Flanged

Carbon Steel (ASTM A 216, Grade WCB)
150 lb. &300 lb. Flanged

Stainless Steel (ASTM A 351, Grade CF8M)
150 lb. & 300 lb. Flanged

APPLICATIONS

Liquid applications where protection from flow reversal in a pipeline is required. These are not recommended for steam service or any reciprocating pump/compressor applications which can result in thermal or physical shock.

CONSTRUCTION

Keckley Style CG globe center guided silent check valves are produced by the investment casting process. These castings are thoroughly inspected and machined to exacting specifications. Reference individual technical data pages for standard materials utilized in the construction of valve components.

FEATURES

- A rounded center body section to reduce pressure drop across the valve.
- A spring automatically closes the disc just prior to zero flow velocity; this prevents any flow reversal or water hammer while minimizing the possibility of "slamming" and/or "surges" in the media.
- The disc is centered and guided, on the inlet by the seat and the discharge side by a bushing, to prevent any potential binding or cocking of the disc during valve cycling.
- Standard metal seats are precision machined and lapped to a mirror finish to provide a long lasting seal which meets or exceeds the API 598 leakage standard. Optional soft seating materials can be provided to produce zero leakage when correctly specified, loaded, and installed.
- Designed for a miniumum open area equal to 110% of the pipe size.
- All sizes feature discs, which lift 1/3 of an inch from their seats for every 1" of pipe size.
- Epoxy coating is standard.
- Field serviceable without the need for special tools.

INSTALLATION

The Style CG can be installed in both vertical and horizontal applications. Contact Keckley for all downward vertical flow installations.

ORDERING

Reference page C2 for Keckley Check Valve Product Numbers.

WORKING PRESSURES - NON SHOCK

NOM. RATING	BODY MATERIAL	MEDIA	2" to 12"	14" to 24"
125#	CAST IRON (ASTM A 126, CLASS B)	W.O.G.	200 PSI @ 150ºF	150 PSI @ 150°F
NOM. RATING	BODY MATERIAL	MEDIA	2" to 12"	14" to 24"
250#	CAST IRON (ASTM A 126, CLASS B)	W.O.G.	500 PSI @ 150ºF	300 PSI @ 150°F
NOM. RATING	BODY MATERIAL	MEDIA	2" to 24"	
150#	CARBON STEEL (ASTM A 216, GRADE WCB)	W.O.G.	285 PSI @ 100ºF	
	STAINLESS STEEL (ASTM A 351, GRADE CF8M)	W.O.G.	275 PSI @ 100ºF	
NOM. RATING	BODY MATERIAL	MEDIA	2" to 24"	
300#	CARBON STEEL (ASTM A 216, GRADE WCB)	W.O.G.	740 PSI @ 100ºF	
	STAINLESS STEEL (ASTM A 351, GRADE CF8M)	W.O.G.	720 PSI @ 100ºF	

KECKLEY

TECHNICAL DATA
DIMENSIONS AND WEIGHTS

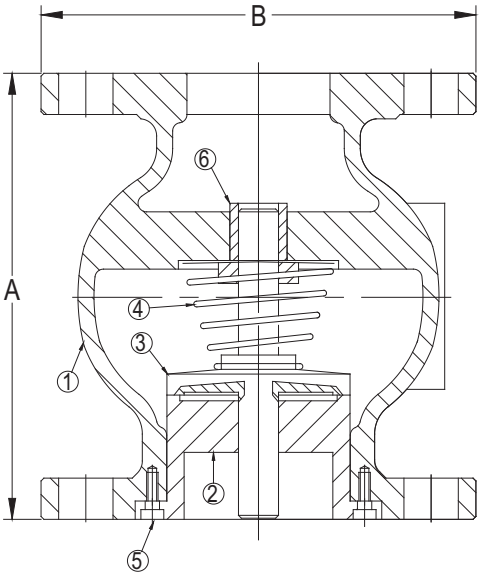

Style CG

Globe Silent Check Valve, 125 lb. & 250 lb. Flanged Cast Iron (ASTM A 126, Class B)

PARTS LIST		
ITEM	DESCRIPTION	MATERIAL
1	Body	Cast Iron (ASTM A 126, Class B)
2	Seat	Cast Bronze (ASTM B 62, C83600)
3	Disc	Cast Bronze (ASTM B 62, C83600)
4	Spring	Stainless Steel (ASTM A 182, Grade F-304)
5	Screw	Stainless Steel (ASTM A 182, Grade F-304)
6	Bushing	Stainless Steel (ASTM A 182, Grade F-304)

Above "Standard" Product Number - **CG1F-CI-B2334** (125# Class)
Above "Standard" Product Number - **CG3R-CI-B2334** (250# Class)
Other Options - Reference C2 for available materials.

SIZE		DIMENSIONS								WEIGHTS			
		A				B							
		125#		250#		125#		250#		125#		250#	
in	mm	in	mm	in	mm	in	mm	in	mm	lbs	kgs	lbs	kgs
2	50	6-1/4	159	6-3/4	171	6	152	6-1/2	165	22	10	26	12
2-1/2	65	7	178	7-5/8	194	7	178	7-1/2	191	25	11	30	14
3	80	7-1/2	191	8-1/4	210	7-1/2	191	8-1/4	210	33	15	45	20
4	100	8-1/2	216	9-1/8	232	9	229	10	254	58	26	75	34
5	125	9-1/2	241	10-3/8	264	10	254	11	279	75	34	135	61
6	150	10-1/2	267	11-3/8	289	11	279	12-1/2	318	96	44	146	66
8	200	13-1/2	343	14	356	13-1/2	343	15	381	180	82	245	111
10	250	16-1/4	413	17	432	16	406	17-1/2	445	270	122	370	168
12	300	20-1/4	514	20-7/8	530	19	483	20-1/2	521	455	206	675	306
14	350	22-3/4	578	23-3/8	594	21	533	23	584	600	272	770	349
16	400	24-3/4	629	25-5/8	651	23-1/2	597	25-1/2	648	844	383	1005	456
18	450	22-1/2	572	24-1/8	613	25	635	28	711	900	408	1240	562
20	500	24	610	25-5/8	651	27-17/32	699	30-1/2	775	1145	519	1780	807
24	600	24	610	24-7/8	632	32	813	36	914	1550	703	2550	1157

Larger sizes available upon request.
†This table reflects only the nearest metric equivalents.

Applicable Standards	
•Design MSS SP-125	•Testing API 598
•ASME B16.1	•MSS SP-6
	•MSS SP-25

Seat Material	Operating Temperature**	
	°F	°C
Buna-N	-40 to 250	-40 to 121
Viton	-15 to 400	-26 to 204
EPDM	-60 to 250	-51 to 121

**Subject to limitations of body material.

FLOW COEFFICIENTS

Size	C_V	Size	C_V	Size	C_V	Size	C_V
2"	63	5"	430	12"	2575	20"	6225
2-1/2"	105	6"	605	14"	3350	24"	9625
3"	148	8"	1105	16"	4300		
4"	265	10"	1700	18"	5225		

PRESSURE vs. TEMPERATURE CHART

125# & 250# Flanged Cast Iron (ASTM A 126, Class B)

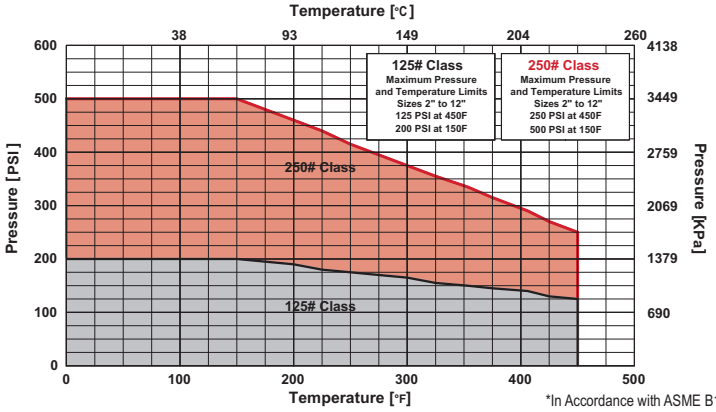

*In Accordance with ASME B16.1

KECKLEY

TECHNICAL DATA
DIMENSIONS AND WEIGHTS

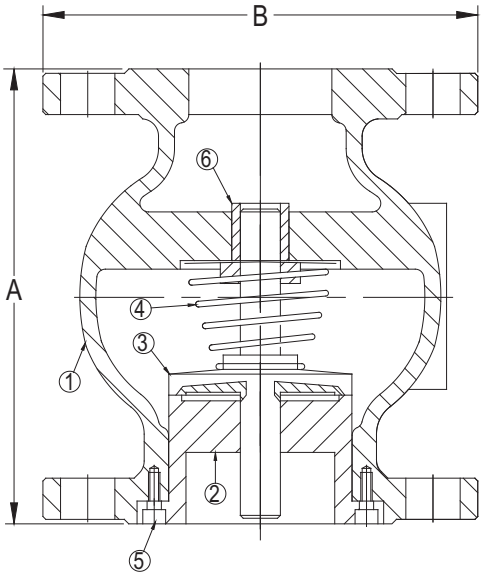

Style CG

Globe Silent Check Valve, 150 lb. & 300 lb. Flanged Carbon Steel (ASTM A 216, Grade WCB)

PARTS LIST		
ITEM	DESCRIPTION	MATERIAL
1	Body	Carbon Steel (ASTM A 216, Grade WCB)
2	Seat	Stainless Steel (ASTM A 351, Grade CF8M)
3	Disc	Stainless Steel (ASTM A 351, Grade CF8M)
4	Spring	Stainless Steel (ASTM A 182, Grade F-316)
5	Screw	Stainless Steel (ASTM A 182, Grade F-316)
6	Bushing	Stainless Steel (ASTM A 182, Grade F-316)

Above "Standard" Product Number - **CG2R-CS-36336** (150# Class)
Above "Standard" Product Number - **CG4R-CS-36336** (300# Class)
Other Options - Reference C2 for available materials.

SIZE		DIMENSIONS								WEIGHTS			
		A				B							
		150#		300#		150#		300#		150#		300#	
in	mm	in	mm	in	mm	in	mm	in	mm	lbs	kgs	lbs	kgs
2	50	6-1/4	159	6-11/16	170	6	152	6-1/2	165	20	9	24	11
2-1/2	65	7	178	7-9/16	192	7	178	7-1/2	191	26	12	31	14
3	80	7-1/2	191	8-1/4	210	7-1/2	191	8-1/4	210	32	15	44	20
4	100	8-1/2	216	9-1/8	232	9	229	10	254	52	24	74	34
5	125	9-1/2	241	10-3/8	264	10	254	11	279	65	29	105	48
6	150	10-1/2	267	11-3/8	289	11	279	12-1/2	318	84	38	134	61
8	200	12	305	13	330	13-1/2	343	15	381	156	71	230	104
10	250	14	356	15-3/8	391	16	406	17-1/2	445	250	113	344	156
12	300	18	457	19-1/2	495	19	483	20-1/2	521	400	181	520	236
14	350	19-3/4	502	21	533	21	533	23	584	580	263	725	329
16	400	21	533	22-5/8	575	23-1/2	597	25-1/2	648	850	386	1000	454
18	450	22-1/2	572	24-1/8	613	25	635	28	711	1100	499	1350	612
20	500	24	610	25-5/8	651	27-17/32	699	30-1/2	775	1450	658	1775	805
24	600	24	610	--	--	32	813	--	--	1550	703	--	--

Larger sizes available upon request.
†This table reflects only the nearest metric equivalents.

Applicable Standards	
•Design MSS SP-126	•Testing API 598
•ASME B16.34	•MSS SP-6
•ASME B16.5	•MSS SP-25
	•MSS SP-55

Seat Material	Operating Temperature**	
	°F	°C
Buna-N	-40 to 250	-40 to 121
Viton	-15 to 400	-26 to 204
EPDM	-60 to 250	-51 to 121

**Subject to limitations of body material.

FLOW COEFFICIENTS

Size	C_V	Size	C_V	Size	C_V	Size	C_V
2"	63	5"	430	12"	2575	20"	6225
2-1/2"	105	6"	605	14"	3350	24"	9625
3"	148	8"	1105	16"	4300		
4"	265	10"	1700	18"	5225		

PRESSURE vs. TEMPERATURE CHART

150# & 300# Carbon Steel (ASTM A 216, Grade WCB)

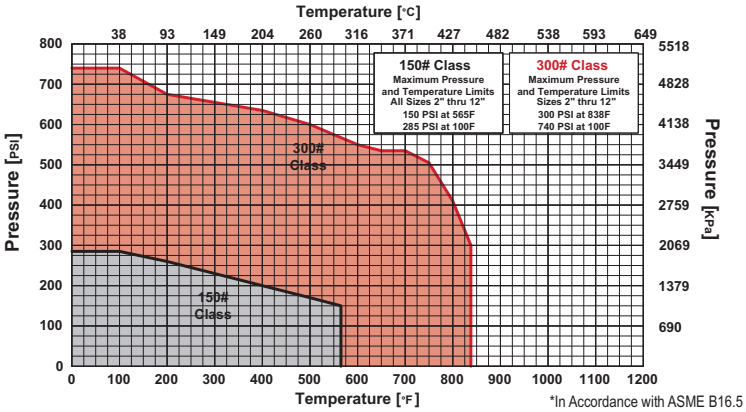

*In Accordance with ASME B16.5

Note: Keckley 300# CG's are not recommended for prolonged usage above 800ºF (427ºC).

KECKLEY

TECHNICAL DATA
DIMENSIONS AND WEIGHTS

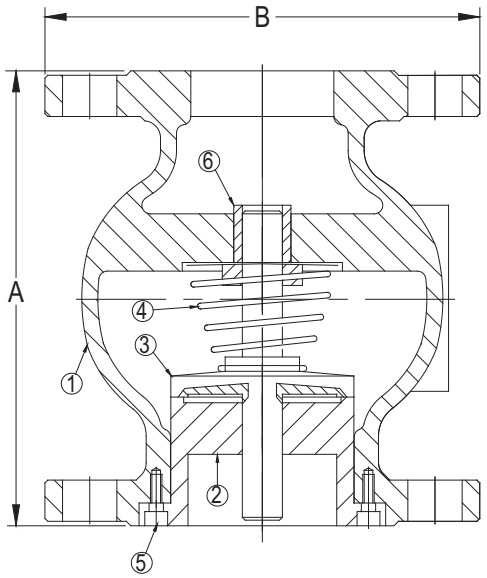

Style CG

Globe Silent Check Valve, 150 lb. & 300 lb. Flanged Stainless Steel (ASTM A 351, Grade CF8M)

PARTS LIST		
ITEM	DESCRIPTION	MATERIAL
1	Body	Stainless Steel (ASTM A 351, Grade CF8M)
2	Seat	Stainless Steel (ASTM A 351, Grade CF8M)
3	Disc	Stainless Steel (ASTM A 351, Grade CF8M)
4	Spring	Stainless Steel (ASTM A 182, Grade F-316)
5	Screw	Stainless Steel (ASTM A 182, Grade F-316)
6	Bushing	Stainless Steel (ASTM A 182, Grade F-316)

Above "Standard" Product Number - **CG2R-36-36336** (150# Class)
Above "Standard" Product Number - **CG4R-36-36336** (300# Class)
Other Options - Reference C2 for available materials.

SIZE		DIMENSIONS								WEIGHTS			
		A				B							
		150#		300#		150#		300#		150#		300#	
in	mm	in	mm	in	mm	in	mm	in	mm	lbs	kgs	lbs	kgs
2	50	6-1/4	159	6-11/16	170	6	152	6-1/2	165	20	9	24	11
2-1/2	65	7	178	7-9/16	192	7	178	7-1/2	191	26	12	31	14
3	80	7-1/2	191	8-1/4	210	7-1/2	191	8-1/4	210	32	15	44	20
4	100	8-1/2	216	9-1/8	232	9	229	10	254	52	24	74	34
5	125	9-1/2	241	10-3/8	264	10	254	11	279	65	29	105	48
6	150	10-1/2	267	11-3/8	289	11	279	12-1/2	318	84	38	134	61
8	200	12	305	13	330	13-1/2	343	15	381	156	71	230	104
10	250	14	356	15-3/8	391	16	406	17-1/2	445	250	113	344	156
12	300	18	457	19-1/2	495	19	483	20-1/2	521	400	181	520	236
14	350	19-3/4	502	21	533	21	533	23	584	580	263	725	329
16	400	21	533	22-5/8	575	23-1/2	597	25-1/2	648	850	386	1000	454
18	450	22-1/2	572	24-1/8	613	25	635	28	711	1100	499	1350	612
20	500	24	610	25-5/8	651	27-17/32	699	30-1/2	775	1450	658	1775	805
24	600	24	610	--	--	32	813	--	--	1550	703	--	--

Larger sizes available upon request.
†This table reflects only the nearest metric equivalents.

Applicable Standards	
•Design MSS SP-126	•Testing API 598
•ASME B16.34	•MSS SP-6
•ASME B16.5	•MSS SP-25
	•MSS SP-55

Seat Material	Operating Temperature**	
	°F	°C
Buna-N	-40 to 250	-40 to 121
Viton	-15 to 400	-26 to 204
EPDM	-60 to 250	-51 to 121

**Subject to limitations of body material.

FLOW COEFFICIENTS

Size	C_V	Size	C_V	Size	C_V	Size	C_V
2"	63	5"	430	12"	2575	20"	6225
2-1/2"	105	6"	605	14"	3350	24"	9625
3"	148	8"	1105	16"	4300		
4"	265	10"	1700	18"	5225		

PRESSURE vs. TEMPERATURE CHART

150# & 300# Flanged Cast 316 Stainless Steel (ASTM A 351, Grade CF8M)

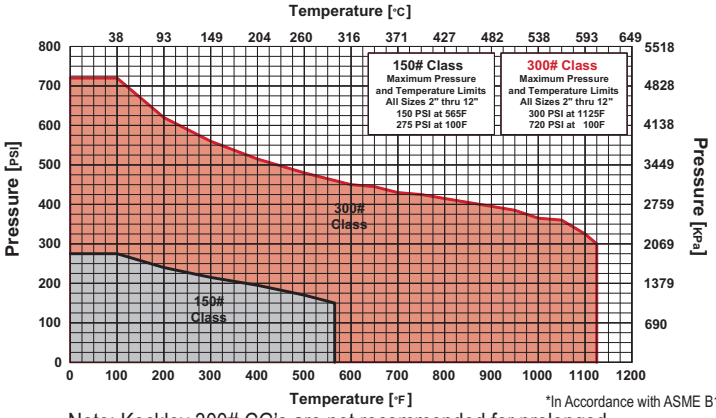

*In Accordance with ASME B16.5

Note: Keckley 300# CG's are not recommended for prolonged usage above 1000°F (583°C).

KECKLEY

Stud and Bolt Dimensions for Wafer Check Valves

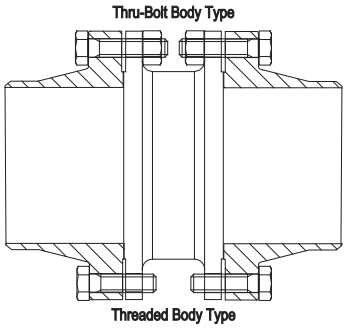

Wafer Lug And Wafer Double Flange Body Type

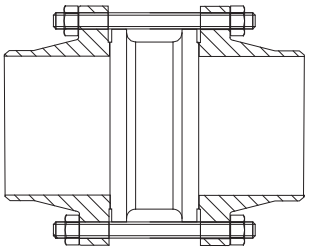

Wafer Body Type

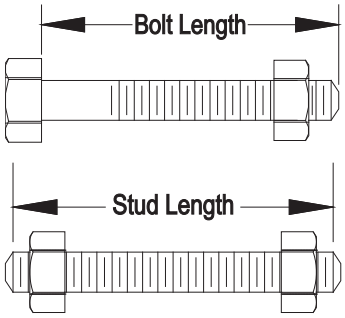

STUD AND BOLT DIMENSIONS FOR WAFER CHECK VALVES

125 lb.		2	2-1/2	3	4	5	6	8	10	12	14	16	18	20	24	30	36	42	48
No. of Studs		4	4	4	8	8	8	8	12	12	12	16	16	20	20	28	32	36	44
Stud	in	5/8	5/8	5/8	5/8	3/4	3/4	7/8	7/8	7/8	1	1	1-1/8	1-1/8	1-1/4	1-1/4	1-1/2	1-1/2	1-1/2
Diameter	mm	16	16	16	16	19	19	19	22	22	25	25	29	29	32	32	38	38	38
Stud	in	5-1/4	5-3/8	5-5/8	6-1/4	6-3/4	7	8	9	10-1/2	12-3/4	13-1/4	14-1/4	15	16	20	23-1/2	26-1/2	30-1/2
Length	mm	133	136	143	159	171	178	203	229	267	324	337	362	381	406	508	597	673	775
No. of Bolts		8	8	8	16	16	16	16	24	24	24	32	32	40	40	56	64	72	88
*Bolt	in	1-3/4	2	2	2	2-1/4	2-1/4	2-1/2	2-1/2	2-3/4	3	3	3-1/4	3-1/4	3-1/2	4-3/4	5-1/2	6	6-1/4
Length	mm	44	51	51	51	57	57	64	64	71	76	76	83	83	89	121	140	152	159

150 lb.		2	2-1/2	3	4	5	6	8	10	12	14	16	18	20	24	30	36	42	48
No. of Studs		4	4	4	8	8	8	8	12	12	12	16	16	20	20	28	32	36	44
Stud	in	5/8	5/8	5/8	5/8	3/4	3/4	3/4	7/8	7/8	1	1	1-1/8	1-1/8	1-1/4	1-1/4	1-1/2	1-1/2	1-1/2
Diameter	mm	16	16	16	16	19	19	19	22	22	25	25	29	29	32	32	38	38	38
Stud	in	5-3/4	6-1/4	6-3/4	6-3/4	7-1/2	8	9-1/2	10-1/2	12	12-3/4	13-1/4	14-1/4	15	15-3/4	21-1/4	26-1/4	28-1/2	33
Length	mm	146	159	171	171	191	203	241	267	305	324	337	362	381	400	540	667	724	838
No. of Bolts		8	8	8	16	16	16	16	24	24	24	32	32	40	40	56	64	72	88
*Bolt	in	1-3/4	2	2	2	2-1/4	2-1/4	2-1/2	2-1/2	2-3/4	3	3	3-1/4	3-1/4	3-1/2	4-3/4	5-1/2	6	6-1/4
Length	mm	44	51	51	51	57	57	4	4	70	6	6	3	3	89	121	140	152	159

250 lb.		2	2-1/2	3	4	5	6	8	10	12	14	16	18	20	24	30	36	42	48
No. of Studs		8	8	8	8	8	12	12	16	16	20	20	24	24	24	28	2	36	40
Stud	in	5/8	3/4	3/4	3/4	3/4	3/4	7/8	1	1-1/8	1-1/8	1-1/4	1-1/4	1-1/4	1-1/2	1-3/4	2	2	2
Diameter	mm	16	19	19	19	19	19	22	25	29	29	32	32	32	38	44	51	51	51
Stud	in	6	6-3/4	7	7-1/2	8-1/4	9	10-1/2	12-1/4	14	16	17	18-1/2	19-3/4	21-3/4	27-1/4	32-1/4	36-1/2	40
Length	mm	152	171	178	191	210	229	267	311	356	406	432	470	502	552	692	819	927	1016
No. of Bolts		16	16	16	16	16	24	24	32	32	40	40	48	48	48	56	64	72	80
*Bolt	in	2	2	2-1/4	2-1/2	2-1/2	2-3/4	2-3/4	3	3-1/2	3-3/4	3-3/4	4-1/4	4	4-1/4	4-3/4	5-3/4	7-1/4	7-3/4
Length	mm	51	51	57	64	64	70	70	76	89	95	95	108	102	108	121	146	184	197

300 lb.		2	2-1/2	3	4	5	6	8	10	12	14	16	18	20	24	30	36	42	48
No. of Studs		8	8	8	8	8	12	12	16	16	20	20	24	24	24	28	32	36	40
Stud	in	5/8	3/4	3/4	3/4	3/4	3/4	7/8	1	1-1/8	1-1/8	1-1/4	1-1/4	1-1/4	1-1/2	1-3/4	2	2	2
Diameter	mm	16	19	19	19	19	19	22	25	29	29	32	32	32	38	44	51	51	51
Stud	in	6	6-3/4	7	7-1/2	8-1/4	9	10-1/2	12-1/4	14	16	17	18-1/2	19-3/4	21-3/4	27-1/4	32-1/4	36-1/2	40
Length	mm	152	171	178	191	210	229	267	311	356	406	432	470	502	552	692	819	927	1016
No. of Bolts		16	16	16	16	16	24	24	32	32	40	40	48	48	48	56	64	72	80
*Bolt	in	2	2	2-1/4	2-1/2	2-1/2	2-3/4	2-3/4	3	3-1/2	3-3/4	3-3/4	4-1/4	4	4-1/4	4-3/4	5-3/4	7-1/4	7-3/4
Length	mm	51	51	57	64	64	70	70	70	89	95	95	108	102	108	121	146	184	197

600 lb.		2	2-1/2	3	4	5	6	8	10	12	14	16	18	20	24	30	36	42	48
No. of Studs		8	8	8	8	8	12	12	16	20	20	20	20	24	24	28	28	28	-
Stud	in	5/8	3/4	3/4	7/8	1	1	1-1/8	1-1/4	1-1/4	1-3/8	1-1/2	1-5/8	1-5/5	1-7/8	2	2-1/2	2-3/4	-
Diameter	mm	16	19	19	22	25	25	29	32	32	35	38	41	41	48	51	64	70	-
Stud	in	6-3/4	7-1/2	8	9-1/4	10-3/4	12-1/4	14-1/4	17	18	20-1/4	22-1/4	25-1/4	26	30-1/4	34-1/4	41	47	-
Length	mm	171	191	203	235	273	311	362	432	457	514	565	641	660	768	870	1041	1194	-
No. of Bolts		16	16	16	16	16	24	24	32	40	40	40	40	48	48	56	56	56	-
*Bolt	in	2-1/4	2-1/2	2-3/4	3	3-1/2	3-1/2	4	4-1/4	4-1/2	4-3/4	5-1/4	5-1/2	5-3/4	6-1/2	7	8	9-3/4	-
Length	mm	57	64	70	76	89	89	102	108	114	121	133	140	146	165	178	203	248	-

900 lb.		2	2-1/2	3	4	5	6	8	10	12	14	16	18	20	24	30	36	42	48
No. of Studs		8	8	8	8	-	12	12	16	20	20	20	20	20	20	-	-	-	-
Stud	in	7/8	1	7/8	1-1/8	-	1-1/8	1-3/8	1-3/8	1-3/8	1-1/2	1-5/8	1-7/8	2	2-1/2	-	-	-	-
Diameter	mm	22	25	22	29	-	29	35	35	35	38	41	48	51	64	-	-	-	-
Stud	in	8-3/4	9-3/4	6-1/4	11	-	14-1/4	17-1/4	19	21-3/4	25-1/2	27	31-1/2	32-1/4	37-1/4	-	-	-	-
Length	mm	222	248	235	279	-	362	438	483	552	648	686	800	819	946	-	-	-	-
No. of Bolts		16	16	16	16	-	24	24	32	40	40	40	40	40	40	-	-	-	-
*Bolt	in	3	3-1/4	3	3-1/2	-	4	4-1/2	4-3/4	5-1/4	5-1/2	5-3/4	6-1/2	6-3/4	8-1/2	-	-	-	-
Length	mm	76	83	76	89	-	102	114	121	133	140	146	165	171	216	-	-	-	-

1500 lb.		2	2-1/2	3	4	5	6	8	10	12	14	16	18	20	24	30	36	42	48
No. of Studs		8	8	8	8	-	12	12	12	16	16	16	16	16	16	-	-	-	-
Stud	in	7/8	1	1-1/8	1-1/4	-	1-3/8	1-5/8	1-7/8	2	2-1/4	2-1/2	2-3/4	3	3-1/2	-	-	-	-
Diameter	mm	22	25	29	32	-	35	41	48	51	57	64	70	76	89	-	-	-	-
Stud	in	8-3/4	9-3/4	10-1/2	12	-	16-3/4	19-3/4	23-1/4	27	30-1/4	33	38-3/4	43-3/4	48	-	-	-	-
Length	mm	22	248	267	305	-	425	502	591	686	768	838	965	1111	1219	-	-	-	-

*Bolt Length only for Wafer Lug & Wafer Double Flange Double Disc Check Valves.

KECKLEY

HEAD LOSS CHART

Wafer Double Disc Check Valve (Style DD, DL, and DF)

This head loss chart is based on the flow of clean water through the Keckley Double Disc Check Valve. The Keckley Style DD has a cracking pressure equal to or less than 0.3 psi when mounted horizontally. Check valves should be placed at a distance equal to 5 to 10 pipe diameters from any turbulence producing device such as elbows, pumps, etc.

TO USE CHARTS:

Find your desired rate of flow (GPM) on the left hand side of the chart. Follow its corresponding horizontal line to the point where it intersects the diagonal line indicating the check valve pipe size. From this point of intersection, follow the vertical line down to the bottom of the chart to determine the approximate head loss.

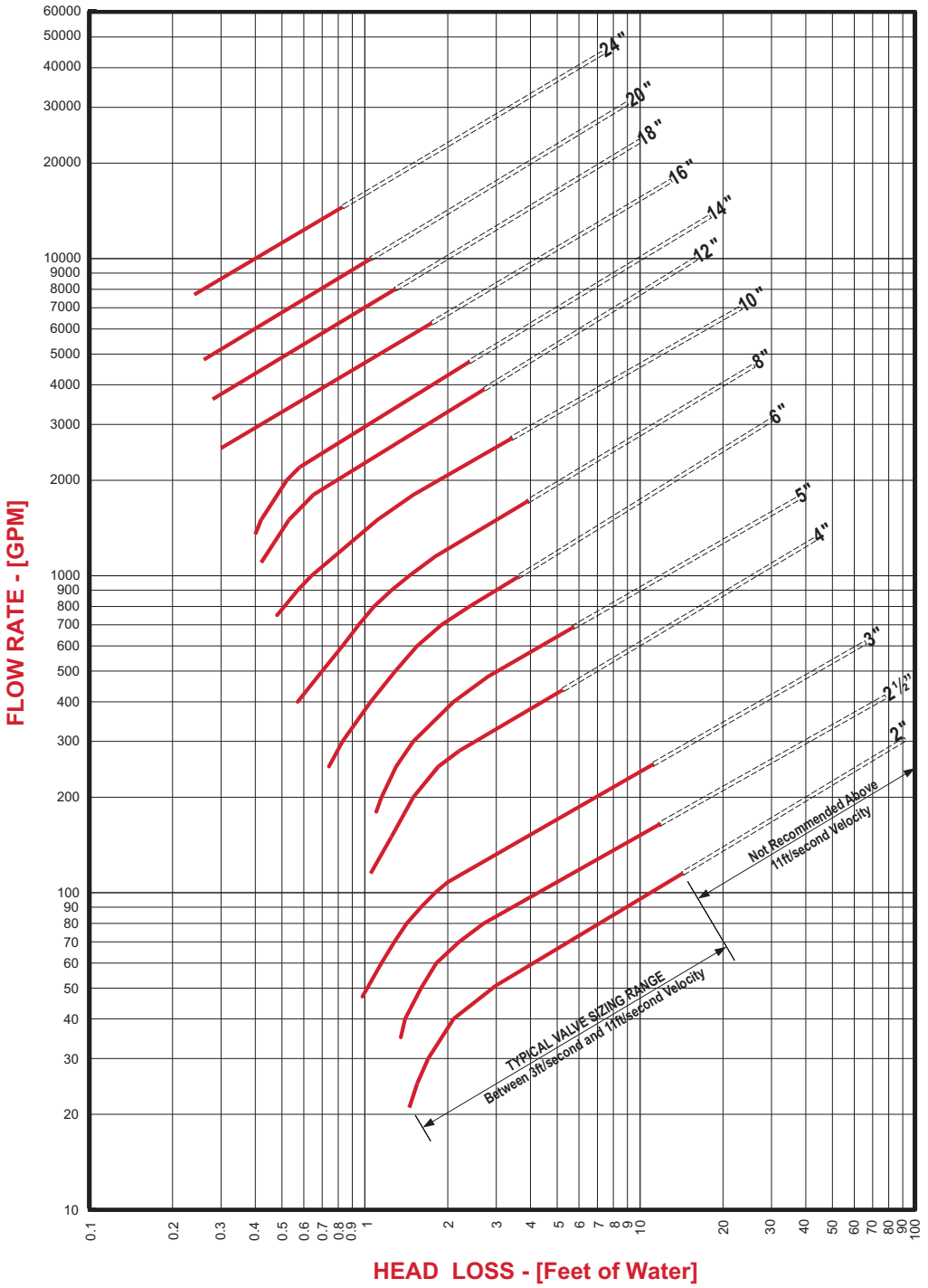

KECKLEY

HEAD LOSS CHART

Wafer Silent Check Valve (Style CW)

This head loss chart is based on the flow of clean water through the Keckley Wafer Silent Check Valve. The Keckley Style CW has a cracking pressure equal to or less than 0.5 psi when mounted horizontally. Check valves should be placed at a distance equal to 5 to 10 pipe diameters from any turbulence producing device such as elbows, pumps, etc.

TO USE CHARTS:

Find your desired rate of flow (GPM) on the left hand side of the chart. Follow its corresponding horizontal line to the point where it intersects the diagonal line indicating the check valve pipe size. From this point of intersection, follow the vertical line down to the bottom of the chart to determine the approximate head loss.

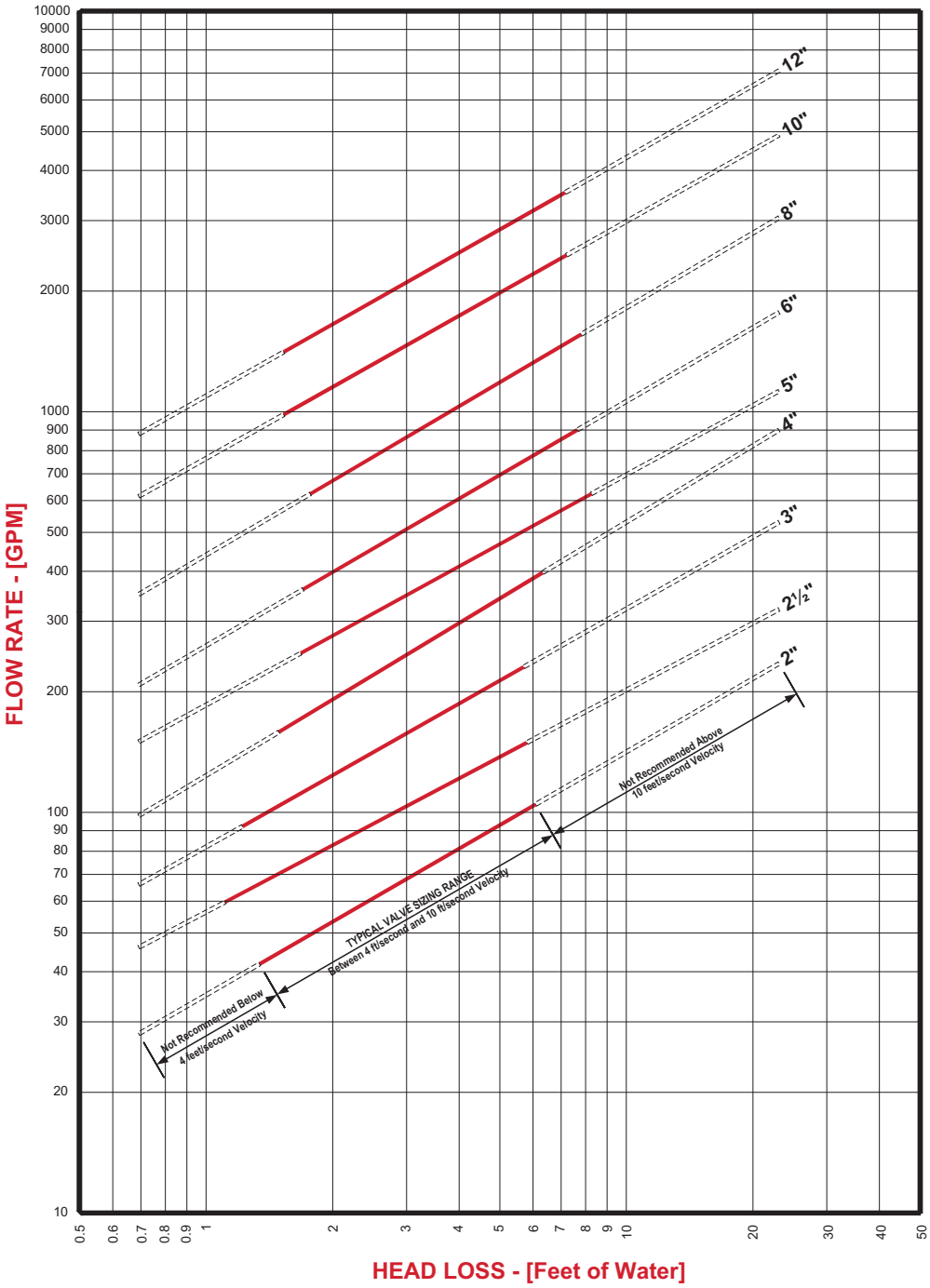

KECKLEY

HEAD LOSS CHART

Globe Silent Check Valve (Style CG)

This head loss chart is based on the flow of clean water through the Keckley Globe Silent Check Valve. The Keckley Style CG has a cracking pressure equal to or less than 0.5 psi when mounted horizontally. Check valves should be placed at a distance equal to 5 to 10 pipe diameters from any turbulence producing device such as elbows, pumps, etc.

TO USE CHARTS:

Find your desired rate of flow (GPM) on the left hand side of the chart. Follow its corresponding horizontal line to the point where it intersects the diagonal line indicating the check valve pipe size. From this point of intersection, follow the vertical line down to the bottom of the chart to determine the approximate head loss.

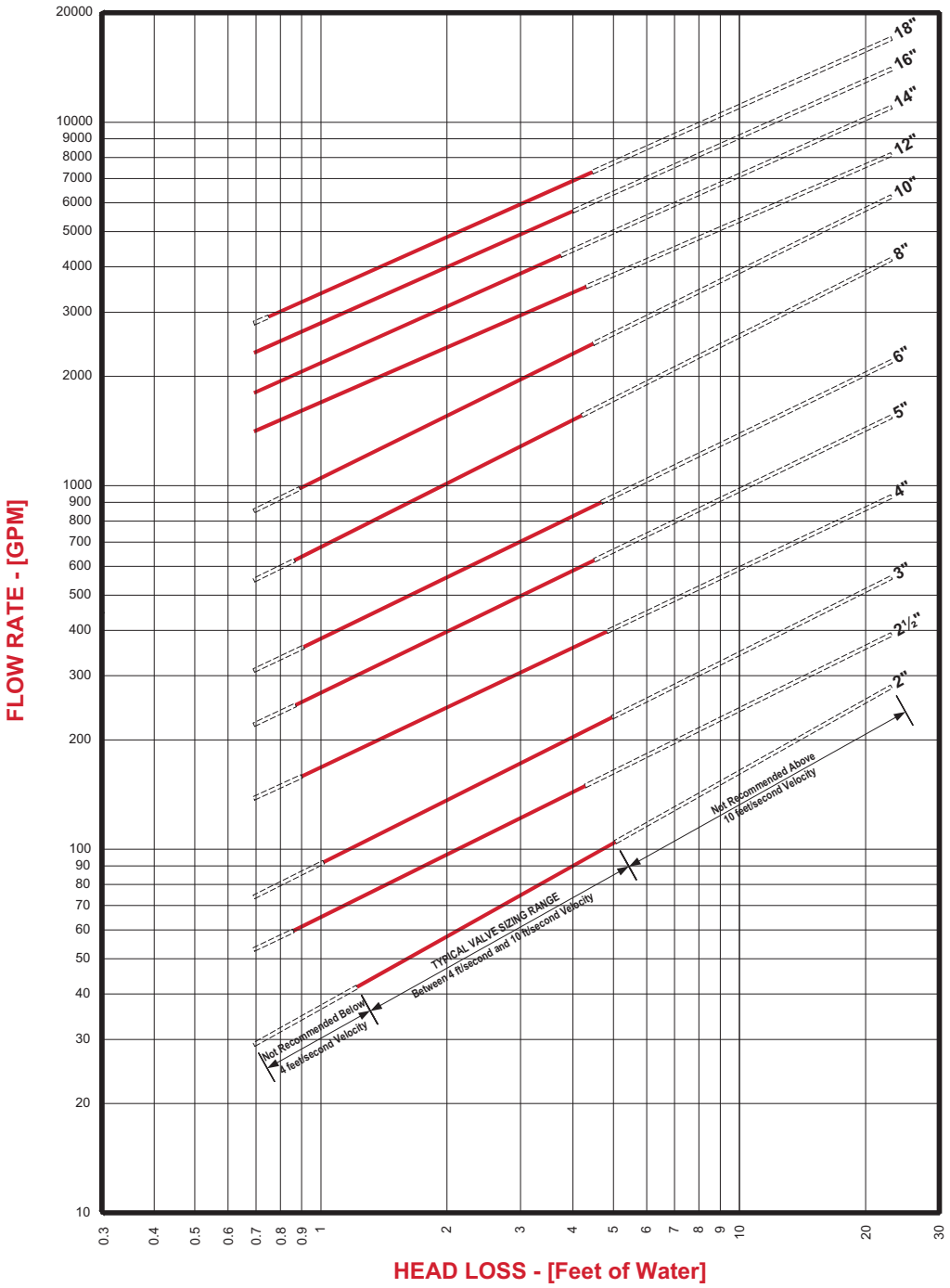

Wafer Body Double Disc Check Valve

Style DD 150# Low Carbon Steel Body 2” – 48” 2
Style DD 300# Low Carbon Steel Body 2” – 48” 3
Style DD 600# Low Carbon Steel Body 2” – 42” 4
Style DD 900# Low Carbon Steel Body 2” – 24” 5
Style DD 1500# Low Carbon Steel Body 2” – 24” 6

Style DD 150# Alloy 20 Body 2” – 48” 7
Style DD 300# Alloy 20 Body 2” – 48” 8
Style DD 600# Alloy 20 Body 2” – 42” 9
Style DD 900# Alloy 20 Body 2” – 24” 10
Style DD 1500# Alloy 20 Body 2” – 24” 11

Style DD 150# Hastelloy C276 Body 2” – 48” 12
Style DD 300# Hastelloy C276 Body 2” – 48” 13
Style DD 600# Hastelloy C276 Body 2” – 42” 14
Style DD 900# Hastelloy C276 Body 2” – 24” 15
Style DD 1500# Hastelloy C276 Body 2” – 24” 16

Style DD 150# Monel Body 2” – 48” 17
Style DD 300# Monel Body 2” – 48” 18
Style DD 600# Monel Body 2” – 42” 19
Style DD 900# Monel Body 2” – 24” 20
Style DD 1500# Monel Body 2” – 24” 21

Style DD 150# Duplex Body 2” – 48” 22
Style DD 300# Duplex Body 2” – 48” 23
Style DD 600# Duplex Body 2” – 42” 24
Style DD 900# Duplex Body 2” – 24” 25
Style DD 1500# Duplex Body 2” – 24” 26

Wafer Lug Body Double Disc Check Valve

Style DL 150# Low Carbon Steel Body 2” – 48” 27
Style DL 300# Low Carbon Steel Body 2” – 48” 28
Style DL 600# Low Carbon Steel Body 2” – 42” 29
Style DL 900# Low Carbon Steel Body 2” – 24” 30
Style DL 1500# Low Carbon Steel Body 2” – 24” 31

Style DL 150# Alloy 20 Body 2” – 48” 32
Style DL 300# Alloy 20 Body 2” – 48” 33
Style DL 600# Alloy 20 Body 2” – 42” 34
Style DL 900# Alloy 20 Body 2” – 24” 35
Style DL 1500# Alloy 20 Body 2” – 24” 36

Style DL 150# Hastelloy C276 Body 2” – 48” 37
Style DL 300# Hastelloy C276 Body 2” – 48” 38
Style DL 600# Hastelloy C276 Body 2” – 42” 39
Style DL 900# Hastelloy C276 Body 2” – 24” 40
Style DL 1500# Hastelloy C276 Body 2” – 24” 41

Style DL 150# Monel Body 2” – 48” 42
Style DL 300# Monel Body 2” – 48” 43
Style DL 600# Monel Body 2” – 42” 44
Style DL 900# Monel Body 2” – 24” 45
Style DL 1500# Monel Body 2” – 24” 46

Style DL 150# Duplex Body 2” – 48” 47
Style DL 300# Duplex Body 2” – 48” 48
Style DL 600# Duplex Body 2” – 42” 49
Style DL 900# Duplex Body 2” – 24” 50
Style DL 1500# Duplex Body 2” – 24” 51

Wafer Double Flange Body Double Disc Check Valve

Style DF 150# Low Carbon Steel Body 8” – 48” 52
Style DF 300# Low Carbon Steel Body 8” – 48” 53
Style DF 600# Low Carbon Steel Body 12” – 42” 54
Style DF 900# Low Carbon Steel Body 12” – 24” 55

Style DF 150# Alloy 20 Body 8” – 48” 56
Style DF 300# Alloy 20 Body 8” – 48” 57
Style DF 600# Alloy 20 Body 12” – 42” 58
Style DF 900# Alloy 20 Body 12” – 24” 59

Style DF 150# Hastelloy C276 Body 8” – 48” 60
Style DF 300# Hastelloy C276 Body 8” – 48” 61
Style DF 600# Hastelloy C276 Body 12” – 42” 62
Style DF 900# Hastelloy C276 Body 12” – 24” 63

Style DF 150# Monel Body 8” – 48” 64
Style DF 300# Monel Body 8” – 48” 65
Style DF 600# Monel Body 12” – 42” 66
Style DF 900# Monel Body 12” – 24” 67

Style DF 150# Duplex Body 8” – 48” 68
Style DF 300# Duplex Body 8” – 48” 69
Style DF 600# Duplex Body 12” – 42” 70
Style DF 900# Duplex Body 12” – 24” 71

Short Pattern & Long Pattern Wafer Check Valve

Style SP and LP 150# Alloy 20 Body 1-1/2” – 60” 72
Style SP and LP 300# Alloy 20 Body 2” – 42” 73
Style SP and LP 600# Alloy 20 Body 2” – 36” 74
Style SP and LP 900# Alloy 20 Body 2” – 36” 75
Style SP and LP 1500# Alloy 20 Body 1-1/2” – 12” 76

Style SP and LP 150# Hastelloy C276 Body 1-1/2” – 60” 77
Style SP and LP 300# Hastelloy C276 Body 2” – 42” 78
Style SP and LP 600# Hastelloy C276 Body 2” – 36” 79
Style SP and LP 900# Hastelloy C276 Body 2” – 36” 80
Style SP and LP 1500# Hastelloy C276 Body 1-1/2” – 12” 81

Style SP and LP 150# Monel Body 1-1/2” – 60” 82
Style SP and LP 300# Monel Body 2” – 42” 83
Style SP and LP 600# Monel Body 2” – 36” 84
Style SP and LP 900# Monel Body 2” – 36” 85
Style SP and LP 1500# Monel Body 1-1/2” – 12” 86

Style SP and LP 150# Titanium Body 1-1/2” – 60” 87
Style SP and LP 300# Titanium Body 2” – 42” 88
Style SP and LP 600# Titanium Body 2” – 36” 89
Style SP and LP 900# Titanium Body 2” – 36” 90
Style SP and LP 1500# Titanium Body 1-1/2” – 12” 91

Pressure Drop Charts

Style DD, DL, and DF 92
Style SP and LP 93

KECKLEY

TECHNICAL DATA
DIMENSIONS AND WEIGHTS

Style DD

Retainerless Wafer Body
Double Disc Check Valve, 150 lb.
Low Carbon Steel (ASTM A 352, Grade LCB)

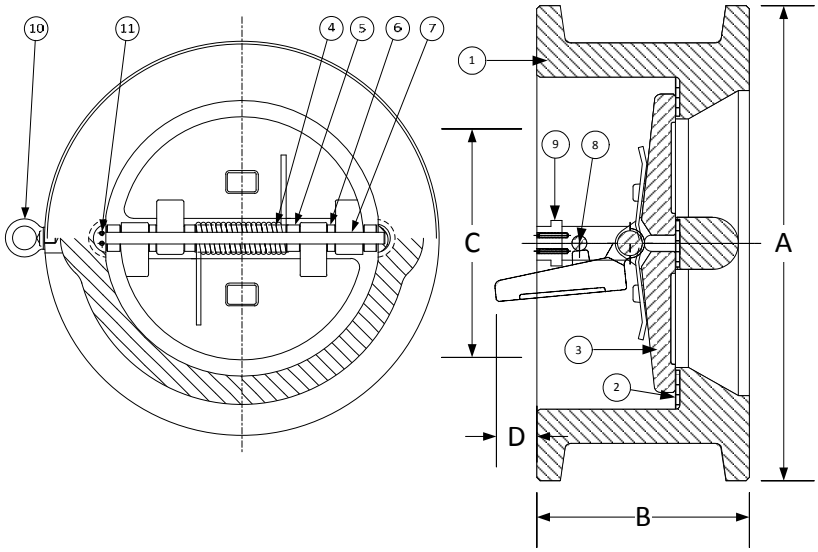

PARTS LIST		
ITEM	DESCRIPTION	MATERIAL
1	Body	Low Carbon Steel (ASTM A 352, Grade LCB)
2	Seat	Viton O-Ring
3	Disc	Low Carbon Steel (ASTM A 352, Grade LCB)
4	Spring	Inconel X-750
5	Spring Plate	Stainless Steel (ASTM A 182, Grade F-316)
6	Thrust Washer	Stainless Steel (ASTM A 182, Grade F-316)
7	Hinge Pin	Stainless Steel (ASTM A 182, Grade F-316)
8	Stop Pin	Stainless Steel (ASTM A 182, Grade F-316)
9	Locating Piece	Stainless Steel (ASTM A 182, Grade F-316)
10	Lifting Lug	Carbon Steel
11	Screw	Stainless Steel (316)

Above "Standard" Product Number – **DD2R-LC-LC4IX**
Other Options - Reference C2 for available materials.

SIZE		DIMENSIONS								WEIGHTS	
		A		B		C*		D			
in	mm	in	mm	in	mm	in	mm	in	mm	lbs	kgs
2	50	4-1/8	105	2-3/8	60	1-15/16	49	-	-	6	3
2-1/2	65	4-7/8	124	2-5/8	67	2-11/32	60	-	-	10	5
3	80	5-3/8	137	2-7/8	73	2-29/32	74	1/4	6	13	6
4	100	6-7/8	175	2-7/8	73	3-53/64	97	5/8	16	17	8
5	125	7-3/4	197	3-3/8	86	4-13/16	122	7/8	22	27	12
6	150	8-3/4	222	3-7/8	98	5-49/64	146	1-3/8	35	35	16
8	200	11	279	5	127	7-5/8	194	2-1/8	54	70	32
10	250	13-3/8	340	5-3/4	146	9-9/16	243	2-3/4	70	106	48
12	300	16-1/8	410	7-1/8	181	11-3/8	289	3-1/4	83	172	78
14	350	17-3/4	451	7-1/4	184	12-1/2	318	3-1/4	83	200	91
16	400	20-1/4	514	7-1/2	191	15	381	4-7/16	113	275	125
18	450	21-5/8	549	8	203	16-7/8	429	5-3/8	137	315	143
20	500	23-7/8	606	8-5/8	219	18-13/16	478	6-5/16	160	435	197
24	600	28-1/4	718	8-3/4	222	22-5/8	575	8-1/4	210	620	281
30	750	34-3/4	883	13	330	29-1/4	743	9	229	1230	558
36	900	41-1/4	1048	15-1/4	387	35	889	11-15/16	303	2017	915
42	1050	48	1219	17	432	41	1041	15	381	2800	1270
48	1200	54-1/2	1384	20-5/8	524	47	1194	16-3/4	425	3920	1778

*Minimum companion flange bore.

Sizes 30" and larger fit **Series A** flanges.

Seat Material	Operating Temperature**	
	°F	°C
Buna-N	-20 to 250	-29 to 121
Viton	-20 to 400	-29 to 204
EPDM	-40 to 300	-40 to 149

**Subject to limitations of body material.

Applicable Standards
• Design ASME B16.5
• Design ASME B16.34
• Testing API 598
• Conforms to API 594 & 6D
• MSS SP – 6
• MSS SP – 25
• MSS SP – 55

FLOW COEFFICIENTS

Size	2"	2½"	3"	4"	5"	6"
C_v	48	98	170	290	495	720
Size	**8"**	**10"**	**12"**	**14"**	**16"**	**18"**
C_v	1800	2600	4300	5500	7200	9400
Size	**20"**	**24"**	**30"**	**36"**	**42"**	**48"**
C_v	12600	19000	37500	60000	89000	124000

KECKLEY COMPANY • 3400 Cleveland Street • Skokie, Illinois 60076 1-800-KECKLEY

KECKLEY

TECHNICAL DATA
DIMENSIONS AND WEIGHTS

Style DD

Retainerless Wafer Body
Double Disc Check Valve, 300 lb.
Low Carbon Steel (ASTM A 352, Grade LCB)

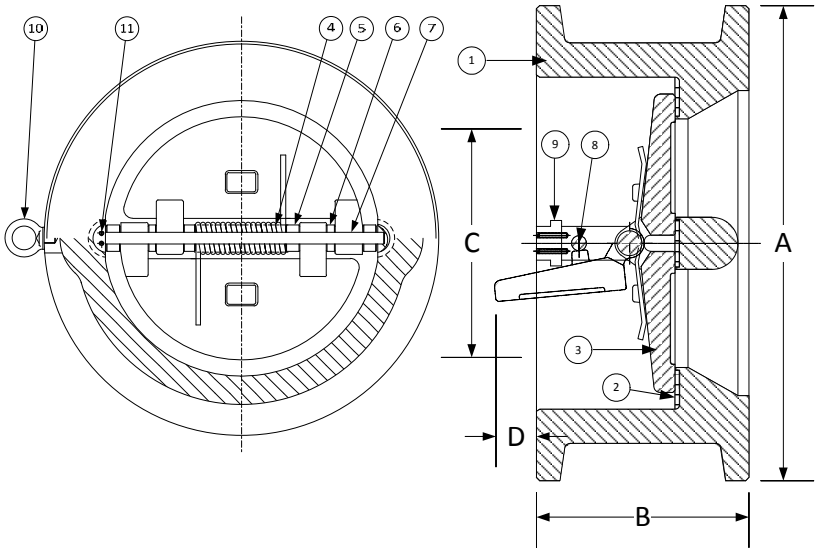

PARTS LIST		
ITEM	DESCRIPTION	MATERIAL
1	Body	Low Carbon Steel (ASTM A 352, Grade LCB)
2	Seat	Viton O-Ring
3	Disc	Low Carbon Steel (ASTM A 352, Grade LCB)
4	Spring	Inconel X-750
5	Spring Plate	Stainless Steel (ASTM A 182, Grade F-316)
6	Thrust Washer	Stainless Steel (ASTM A 182, Grade F-316)
7	Hinge Pin	Stainless Steel (ASTM A 182, Grade F-316)
8	Stop Pin	Stainless Steel (ASTM A 182, Grade F-316)
9	Locating Piece	Stainless Steel (ASTM A 182, Grade F-316)
10	Lifting Lug	Carbon Steel
11	Screw	Stainless Steel (316)

Above "Standard" Product Number – **DD4R-LC-LC4IX**
Other Options - Reference C2 for available materials.

SIZE		DIMENSIONS								WEIGHTS	
		A		B		C*		D			
in	mm	in	mm	in	mm	in	mm	in	mm	lbs	kgs
2	50	4-3/8	111	2-3/8	60	1-15/16	49	-	-	7	3
2-1/2	65	5-1/8	130	2-5/8	67	2-11/32	60	-	-	11	5
3	80	5-7/8	149	2-7/8	73	2-29/32	74	1/4	6	15	7
4	100	7-1/8	181	2-7/8	73	3-53-64	97	5/8	16	18	8
5	125	8-1/2	216	3-3/8	86	4-13/16	122	7/8	22	35	16
6	150	9-7/8	251	3-7/8	98	5-49/64	146	1-3/8	35	45	20
8	200	12-1/8	308	5	127	7-5/8	194	2-1/8	54	82	37
10	250	14-1/4	362	5-3/4	146	9-9/16	243	2-3/4	70	125	57
12	300	16-5/8	422	7-1/8	181	11-3/8	289	3-1/4	83	200	91
14	350	19-1/8	486	8-3/4	222	12-1/2	318	3-3/16	81	325	147
16	400	21-1/4	540	9-1/8	232	14-5/16	364	4-1/8	105	415	188
18	450	23-1/2	597	10-3/8	264	16-7/8	429	4-13/16	122	555	252
20	500	25-3/4	654	11-1/2	292	17-15/16	456	5-5/8	143	725	329
24	600	30-1/2	775	12-1/2	318	21-9/16	548	7-1/16	179	1100	499
30	750	37-1/2	953	14-1/2	3968	28-3/4	730	9-1/16	230	2050	930
36	900	44	1118	19	483	35	889	11-3/16	284	3573	1621
42	1050	45-7/8	1289	22-3/8	568	41	1041	14-3/4	375	4723	2147
48	1200	52-1/8	1492	24-3/4	629	47	1194	16-1/2	419	6090	2768

*Minimum companion flange bore.

Sizes 30" and larger fit **Series A** flanges.

Seat Material	Operating Temperature**	
	°F	°C
Buna-N	-20 to 250	-29 to 121
Viton	-20 to 400	-29 to 204
EPDM	-40 to 300	-40 to 149

**Subject to limitations of body material.

Applicable Standards
• Design ASME B16.5
• Design ASME B16.34
• Testing API 598
• Conforms to API 594 & 6D
• MSS SP – 6
• MSS SP – 25
• MSS SP – 55

FLOW COEFFICIENTS

Size	2"	2½"	3"	4"	5"	6"
C_v	48	98	170	290	495	720
Size	8"	10"	12"	14"	16"	18"
C_v	1800	2600	4300	5500	7200	9400
Size	20"	24"	30"	36"	42"	48"
C_v	12600	19000	37500	60000	89000	124000

KECKLEY

TECHNICAL DATA
DIMENSIONS AND WEIGHTS

Style DD

Retainerless Wafer Body
Double Disc Check Valve, 600 lb.
Low Carbon Steel (ASTM A 352, Grade LCB)

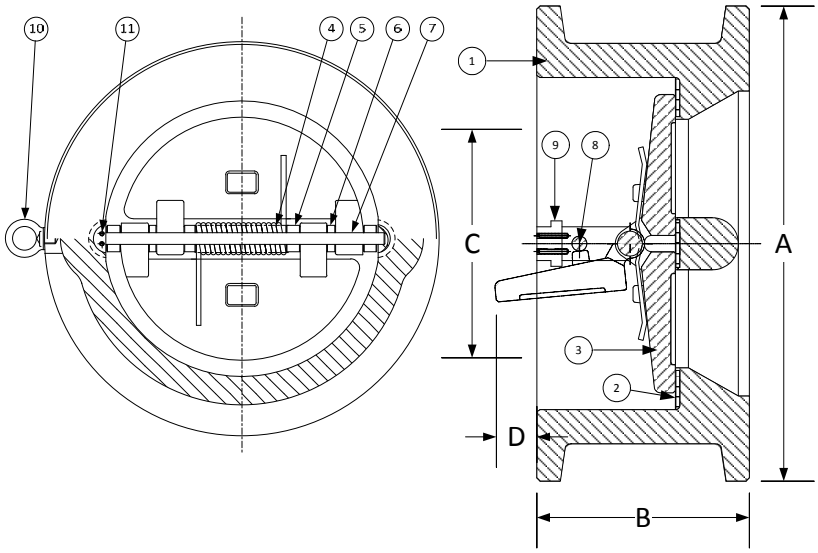

PARTS LIST		
ITEM	DESCRIPTION	MATERIAL
1	Body	Low Carbon Steel (ASTM A 216, Grade WCB)
2	Seat	Viton O-Ring
3	Disc	Low Carbon Steel (ASTM A 216, Grade WCB)
4	Spring	Inconel X-750
5	Spring Plate	Stainless Steel (ASTM A 182, Grade F-316)
6	Thrust Washer	Stainless Steel (ASTM A 182, Grade F-316)
7	Hinge Pin	Stainless Steel (ASTM A 182, Grade F-316)
8	Stop Pin	Stainless Steel (ASTM A 182, Grade F-316)
9	Locating Piece	Stainless Steel (ASTM A 182, Grade F-316)
10	Lifting Lug	Carbon Steel
11	Screw	Stainless Steel (316)

Above "Standard" Product Number – **DD5R-LC-LC4IX**
Other Options - Reference C2 for available materials.

SIZE		DIMENSIONS								WEIGHTS	
		A		B		C*		D			
in	mm	in	mm	in	mm	in	mm	in	mm	lbs	kgs
2	50	4-3/8	111	2-3/8	60	1-15/16	49	-	-	7	3
2-1/2	65	5-1/8	130	2-5/8	67	2-11/32	60	1/8	3	11	5
3	80	5-7/8	149	2-7/8	73	2-29/32	74	1/4	6	15	7
4	100	7-5/8	194	3-1/8	79	3-53/64	97	7/8	22	26	12
5	125	9-1/2	241	4-1/8	105	4-13/16	122	1	25	50	23
6	150	10-1/2	267	5-3/8	136	5-49/64	146	1-7/16	36	80	36
8	200	12-5/8	321	6-1/2	165	7-5/8	194	2	51	135	61
10	250	15-3/4	400	8-3/8	213	9-9/16	243	2-9/32	58	238	108
12	300	18	457	9	229	11-3/8	289	3-15/32	88	333	151
14	350	19-3/8	492	10-3/4	273	12-1/2	318	2-3/4	70	455	206
16	400	22-1/4	565	12	305	14-5/16	364	4-5/16	110	640	290
18	450	24-1/8	613	14-1/4	362	16-1/8	410	3-11/16	94	890	404
20	500	26-7/8	386	14-1/2	368	17-15/16	456	5-5/16	135	1120	508
24	600	31-1/8	791	17-1/4	438	21-9/16	548	6-9/16	167	2040	925
30	750	38-1/4	972	19-7/8	505	28-3/4	730	9-9/16	243	3375	1531
36	900	44-1/2	1130	25	635	33-3/4	857	11-15/16	303	6300	2858
42	1050	48	1219	27-5/8	702	39-1/2	1003	14-1/4	362	8447	3832

*Minimum companion flange bore.

Sizes 30" and larger fit **Series A** flanges.

Seat Material	Operating Temperature**	
	°F	°C
Buna-N	-20 to 250	-29 to 121
Viton	-20 to 400	-29 to 204
EPDM	-40 to 300	-40 to 149

**Subject to limitations of body material.

Applicable Standards
• Design ASME B16.5
• Design ASME B16.34
• Testing API 598
• Conforms to API 594 & 6D
• MSS SP – 6
• MSS SP – 25
• MSS SP – 55

FLOW COEFFICIENTS

Size	2"	2½"	3"	4"	5"	6"
C_v	48	98	170	290	495	720
Size	**8"**	**10"**	**12"**	**14"**	**16"**	**18"**
C_v	1800	2600	4300	5500	7200	9400
Size	**20"**	**24"**	**30"**	**36"**	**42"**	
C_v	12600	19000	37500	60000	89000	

KECKLEY COMPANY • 3400 Cleveland Street • Skokie, Illinois 60076 1-800-KECKLEY

KECKLEY

TECHNICAL DATA
DIMENSIONS AND WEIGHTS

Style DD

Retainerless Wafer Body
Double Disc Check Valve, 900 lb.
Low Carbon Steel (ASTM A 352, Grade LCB)

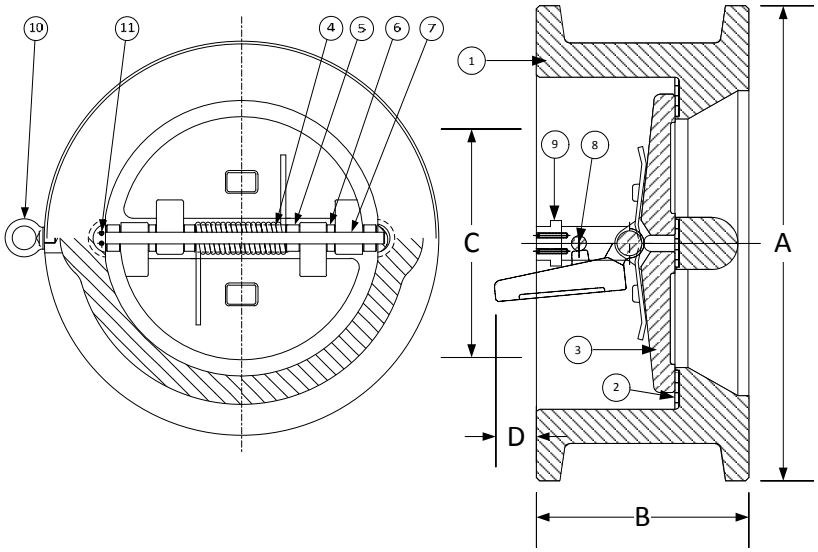

PARTS LIST		
ITEM	DESCRIPTION	MATERIAL
1	Body	Low Carbon Steel (ASTM A 352, Grade LCB)
2	Seat	Viton O-Ring
3	Disc	Low Carbon Steel (ASTM A 352, Grade LCB)
4	Spring	Inconel X-750
5	Spring Plate	Stainless Steel (ASTM A 182, Grade F-316)
6	Thrust Washer	Stainless Steel (ASTM A 182, Grade F-316)
7	Hinge Pin	Stainless Steel (ASTM A 182, Grade F-316)
8	Stop Pin	Stainless Steel (ASTM A 182, Grade F-316)
9	Locating Piece	Stainless Steel (ASTM A 182, Grade F-316)
10	Lifting Lug	Carbon Steel
11	Screw	Stainless Steel (316)

Above "Standard" Product Number – **DD6R-LC-LC4IX**
Other Options - Reference C2 for available materials.

SIZE		DIMENSIONS								WEIGHTS	
		A		B		C*		D			
in	mm	in	mm	in	mm	in	mm	in	mm	lbs	kgs
2	50	5-5/8	143	2-3/4	70	1-11/16	43	-	-	14	6
2-1/2	65	6-1/2	165	3-1/4	83	2-1/8	54	1/16	2	16	7
3	80	6-5/8	168	3-1/4	83	2-5/8	67	5/16	8	24	11
4	100	8-1/8	206	4	102	3-7/16	87	9/16	14	40	18
5	125	9-3/4	248	-	-	4-5/16	110	-	-	-	-
6	150	11-3/8	289	6-1/4	159	5-3/16	132	1-1/16	27	115	52
8	200	14-1/8	359	8-1/8	206	6-13/16	173	1-13/32	36	229	104
10	250	17-1/8	435	9-1/2	241	8-1/2	216	1-13/16	46	388	176
12	300	19-5/8	498	11-1/2	292	10-1/8	257	2-5/16	59	540	245
14	350	20-1/2	521	14	356	11-1/2	292	2	51	926	420
16	400	22-5/8	575	15-1/8	384	12-13/16	325	2-5/8	67	1152	523
18	450	25-1/8	638	17-3/4	451	14-7/16	367	2-9/16	65	1318	598
20	500	27-1/2	699	17-3/4	451	17-15/16	456	5-5/16	135	1426	647
24	600	33	838	19-1/2	495	21-1/2	546	5-5/8	143	2729	1238

*Minimum companion flange bore.

Seat Material	Operating Temperature**	
	°F	°C
Buna-N	-20 to 250	-29 to 121
Viton	-20 to 400	-29 to 204
EPDM	-40 to 300	-40 to 149

**Subject to limitations of body material.

Applicable Standards
• Design ASME B16.5
• Design ASME B16.34
• Testing API 598
• Conforms to API 594 & 6D
• MSS SP – 6
• MSS SP – 25
• MSS SP – 55

FLOW COEFFICIENTS

Size	2"	2½"	3"	4"	5"	6"
C_v	48	98	170	290	495	720
Size	8"	10"	12"	14"	16"	18"
C_v	1800	2600	4300	5500	7200	9400
Size	20"	24"				
C_v	12600	19000				

KECKLEY

TECHNICAL DATA
DIMENSIONS AND WEIGHTS

Style DD

Retainerless Wafer Body
Double Disc Check Valve, 1500 lb.
Low Carbon Steel (ASTM A 352, Grade LCB)

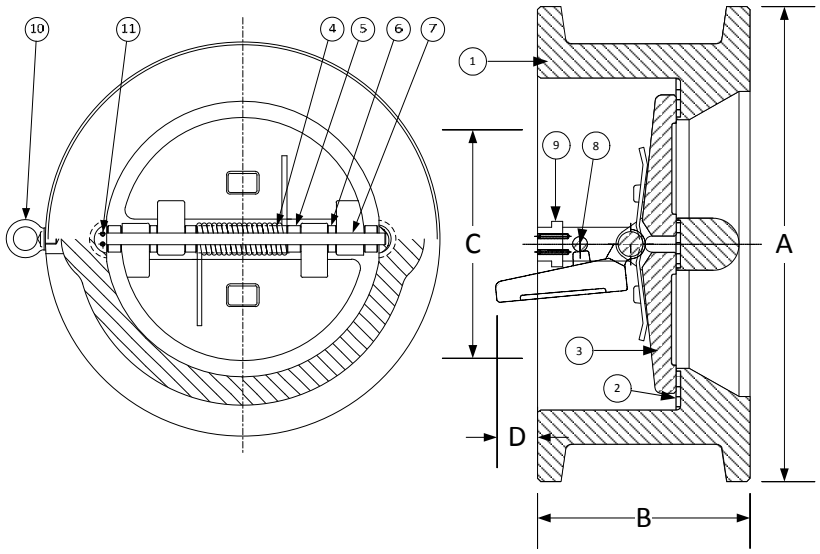

PARTS LIST		
ITEM	DESCRIPTION	MATERIAL
1	Body	Low Carbon Steel (ASTM A 352, Grade LCB)
2	Seat	Viton O-Ring
3	Disc	Low Carbon Steel (ASTM A 352, Grade LCB)
4	Spring	Inconel X-750
5	Spring Plate	Stainless Steel (ASTM A 182, Grade F-316)
6	Thrust Washer	Stainless Steel (ASTM A 182, Grade F-316)
7	Hinge Pin	Stainless Steel (ASTM A 182, Grade F-316)
8	Stop Pin	Stainless Steel (ASTM A 182, Grade F-316)
9	Locating Piece	Stainless Steel (ASTM A 182, Grade F-316)
10	Lifting Lug	Carbon Steel
11	Screw	Stainless Steel (316)

Above "Standard" Product Number – **DD7R-LC-LC4IX**
Other Options - Reference C2 for available materials.

SIZE		DIMENSIONS								WEIGHTS	
		A		B		C*		D			
in	mm	in	mm	in	mm	in	mm	in	mm	lbs	kgs
2	50	5-5/8	143	2-3/4	70	1-11/16	43	-	-	14	6
2-1/2	65	6-1/2	165	3-1/4	83	2-1/8	54	1/16	2	16	7
3	80	6-7/8	175	3-1/4	83	2-5/8	67	5/16	8	25	11
4	100	8-1/4	210	4	102	3-7/16	87	9-1/16	14	53	20
5	125	10	254	-	-	4-5/16	110	-	-	-	-
6	150	11-1/8	283	6-1/4	159	5-3/16	132	1-1/16	27	110	50
8	200	13-7/8	352	8-1/8	206	6-13/16	173	1-13/32	36	219	99
10	250	17-1/8	435	9-3/4	248	8-1/2	216	1-11/16	43	397	180
12	300	20-1/2	521	12	305	10-1/8	257	2-1/4	57	725	329
14	350	22-3/4	578	14	356	11-1/2	292	2	51	948	430
16	400	25-1/4	641	15-1/8	384	12-13/16	325	2-5/8	67	1380	627
18	450	27-3/4	705	18-7/16	468	13-3/4	349	2-11/16	68	1900	863
20	500	29-3/4	756	21	533	14-3/4	375	4	102	2750	1247
24	600	35-1/2	902	22	559	15-1/8	384	4-1/8	105	4409	2000

*Minimum companion flange bore.

Seat Material	Operating Temperature**	
	°F	°C
Buna-N	-20 to 250	-29 to 121
Viton	-20 to 400	-29 to 204
EPDM	-40 to 300	-40 to 149

**Subject to limitations of body material.

Applicable Standards
• Design ASME B16.5
• Design ASME B16.34
• Testing API 598
• Conforms to API 594 & 6D
• MSS SP – 6
• MSS SP – 25
• MSS SP – 55

FLOW COEFFICIENTS

Size	2"	2½"	3"	4"	5"	6"
C_v	48	98	170	290	495	720
Size	8"	10"	12"	14"	16"	18"
C_v	1800	2600	4300	5500	7200	9400
Size	20"	24"				
C_v	12600	19000				

KECKLEY

TECHNICAL DATA
DIMENSIONS AND WEIGHTS

Style DD

Retainerless Wafer Body
Double Disc Check Valve, 150 lb.
Alloy 20 (ASTM A 351, Grade CN7M)

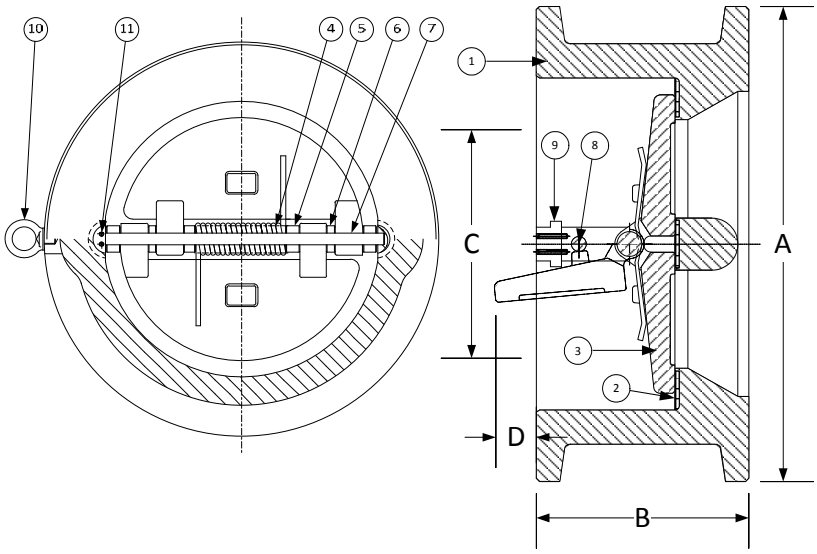

PARTS LIST		
ITEM	DESCRIPTION	MATERIAL
1	Body	Alloy 20 (ASTM A 351, Grade CN7M)
2	Seat	Viton
3	Disc	Alloy 20 (ASTM A 351, Grade CN7M)
4	Spring	Inconel X-750
5	Spring Plate	Stainless Steel (ASTM A 182, Grade F-316)
6	Thrust Washer	Stainless Steel (ASTM A 182, Grade F-316)
7	Hinge Pin	Stainless Steel (ASTM A 182, Grade F-316)
8	Stop Pin	Stainless Steel (ASTM A 182, Grade F-316)
9	Locating Piece	Stainless Steel (ASTM A 182, Grade F-316)
10	Lifting Lug	Carbon Steel
11	Screw	Stainless Steel (316)

Above "Standard" Product Number – **DD2R-A2-A24IX**
Other Options - Reference C2 for available materials.

SIZE		DIMENSIONS								WEIGHTS	
		A		B		C*		D			
in	mm	in	mm	in	mm	in	mm	in	mm	lbs	kgs
2	50	4-1/8	105	2-3/8	60	1-15/16	49	-	-	6	3
2-1/2	65	4-7/8	124	2-5/8	67	2-11/32	60	-	-	10	5
3	80	5-3/8	137	2-7/8	73	2-29/32	74	1/4	6	13	6
4	100	6-7/8	175	2-7/8	73	3-53/64	97	5/8	16	17	8
5	125	7-3/4	197	3-3/8	86	4-13/16	122	7/8	22	27	12
6	150	8-3/4	222	3-7/8	98	5-49/64	146	1-3/8	35	35	16
8	200	11	279	5	127	7-5/8	194	2-1/8	54	70	32
10	250	13-3/8	340	5-3/4	146	9-9/16	243	2-3/4	70	106	48
12	300	16-1/8	410	7-1/8	181	11-3/8	289	3-1/4	83	172	78
14	350	17-3/4	451	7-1/4	184	12-1/2	318	3-1/4	83	200	91
16	400	20-1/4	514	7-1/2	191	15	381	4-7/16	113	275	125
18	450	21-5/8	549	8	203	16-7/8	429	5-3/8	137	315	143
20	500	23-7/8	606	8-5/8	219	18-13/16	478	6-5/16	160	435	197
24	600	28-1/4	718	8-3/4	222	22-5/8	575	8-1/4	210	620	281
30	750	34-3/4	883	13	330	29-1/4	743	9	229	1230	558
36	900	41-1/4	1048	15-1/4	387	35	889	11-15/16	303	2017	915
42	1050	48	1219	17	432	41	1041	15	381	2800	1270
48	1200	54-1/2	1384	20-5/8	524	47	1194	16-3/4	425	3920	1778

*Minimum companion flange bore.

Sizes 30" and larger fit **Series A** flanges.

Seat Material	Operating Temperature**	
	°F	°C
Buna-N	-20 to 250	-29 to 121
Viton	-20 to 400	-29 to 204
EPDM	-40 to 300	-40 to 149

**Subject to limitations of body material.

Applicable Standards
• Design ASME B16.5
• Design ASME B16.34
• Testing API 598
• Conforms to API 594 & 6D
• MSS SP – 6
• MSS SP – 25
• MSS SP – 55

FLOW COEFFICIENTS

Size	2"	2½"	3"	4"	5"	6"
C_v	48	98	170	290	495	720
Size	**8"**	**10"**	**12"**	**14"**	**16"**	**18"**
C_v	1800	2600	4300	5500	7200	9400
Size	**20"**	**24"**	**30"**	**36"**	**42"**	**48"**
C_v	12600	19000	37500	60000	89000	124000

KECKLEY

TECHNICAL DATA
DIMENSIONS AND WEIGHTS

Style DD

Retainerless Wafer Body
Double Disc Check Valve, 300 lb.
Alloy 20 (ASTM A 351, Grade CN7M)

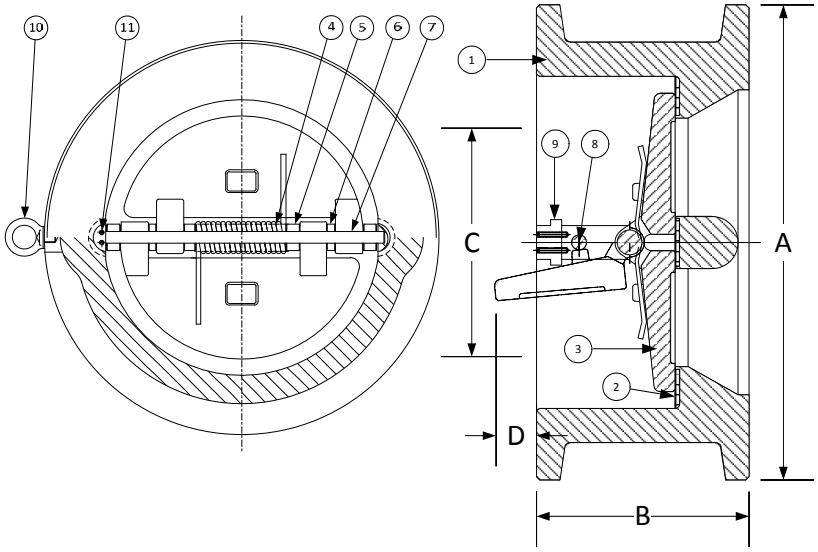

PARTS LIST		
ITEM	DESCRIPTION	MATERIAL
1	Body	Alloy 20 (ASTM A 351, Grade CN7M)
2	Seat	Viton O-Ring
3	Disc	Alloy 20 (ASTM A 351, Grade CN7M)
4	Spring	Inconel X-750
5	Spring Plate	Stainless Steel (ASTM A 182, Grade F-316)
6	Thrust Washer	Stainless Steel (ASTM A 182, Grade F-316)
7	Hinge Pin	Stainless Steel (ASTM A 182, Grade F-316)
8	Stop Pin	Stainless Steel (ASTM A 182, Grade F-316)
9	Locating Piece	Stainless Steel (ASTM A 182, Grade F-316)
10	Lifting Lug	Carbon Steel
11	Screw	Stainless Steel (316)

Above "Standard" Product Number – **DD4R-A2-A24IX**
Other Options - Reference C2 for available materials.

SIZE		DIMENSIONS								WEIGHTS	
		A		B		C*		D			
in	mm	in	mm	in	mm	in	mm	in	mm	lbs	kgs
2	50	4-3/8	111	2-3/8	60	1-15/16	49	-	-	7	3
2-1/2	65	5-1/8	130	2-5/8	67	2-11/32	60	-	-	11	5
3	80	5-7/8	149	2-7/8	73	2-29/32	74	1/4	6	15	7
4	100	7-1/8	181	2-7/8	73	3-53-64	97	5/8	16	18	8
5	125	8-1/2	216	3-3/8	86	4-13/16	122	7/8	22	35	16
6	150	9-7/8	251	3-7/8	98	5-49/64	146	1-3/8	35	45	20
8	200	12-1/8	308	5	127	7-5/8	194	2-1/8	54	82	37
10	250	14-1/4	362	5-3/4	146	9-9/16	243	2-3/4	70	125	57
12	300	16-5/8	422	7-1/8	181	11-3/8	289	3-1/4	83	200	91
14	350	19-1/8	486	8-3/4	222	12-1/2	318	3-3/16	81	325	147
16	400	21-1/4	540	9-1/8	232	14-5/16	364	4-1/8	105	415	188
18	450	23-1/2	597	10-3/8	264	16-7/8	429	4-13/16	122	555	252
20	500	25-3/4	654	11-1/2	292	17-15/16	456	5-5/8	143	725	329
24	600	30-1/2	775	12-1/2	318	21-9/16	548	7-1/16	179	1100	499
30	750	37-1/2	953	14-1/2	3968	28-3/4	730	9-1/16	230	2050	930
36	900	44	1118	19	483	35	889	11-3/16	284	3573	1621
42	1050	45-7/8	1289	22-3/8	568	41	1041	14-3/4	375	4723	2147
48	1200	52-1/8	1492	24-3/4	629	47	1194	16-1/2	419	6090	2768

*Minimum companion flange bore.

Sizes 30" and larger fit **Series A** flanges.

Seat Material	Operating Temperature**	
	°F	°C
Buna-N	-20 to 250	-29 to 121
Viton	-20 to 400	-29 to 204
EPDM	-40 to 300	-40 to 149

**Subject to limitations of body material.

Applicable Standards
• Design ASME B16.5
• Design ASME B16.34
• Testing API 598
• Conforms to API 594 & 6D
• MSS SP – 6
• MSS SP – 25
• MSS SP – 55

FLOW COEFFICIENTS

Size	2"	2½"	3"	4"	5"	6"
C_v	48	98	170	290	495	720
Size	**8"**	**10"**	**12"**	**14"**	**16"**	**18"**
C_v	1800	2600	4300	5500	7200	9400
Size	**20"**	**24"**	**30"**	**36"**	**42"**	**48"**
C_v	12600	19000	37500	60000	89000	124000

KECKLEY COMPANY • 3400 Cleveland Street • Skokie, Illinois 60076 1-800-KECKLEY

KECKLEY

TECHNICAL DATA
DIMENSIONS AND WEIGHTS

Style DD

Retainerless Wafer Body
Double Disc Check Valve, 600 lb.
Alloy 20 (ASTM A 351, Grade CN7M)

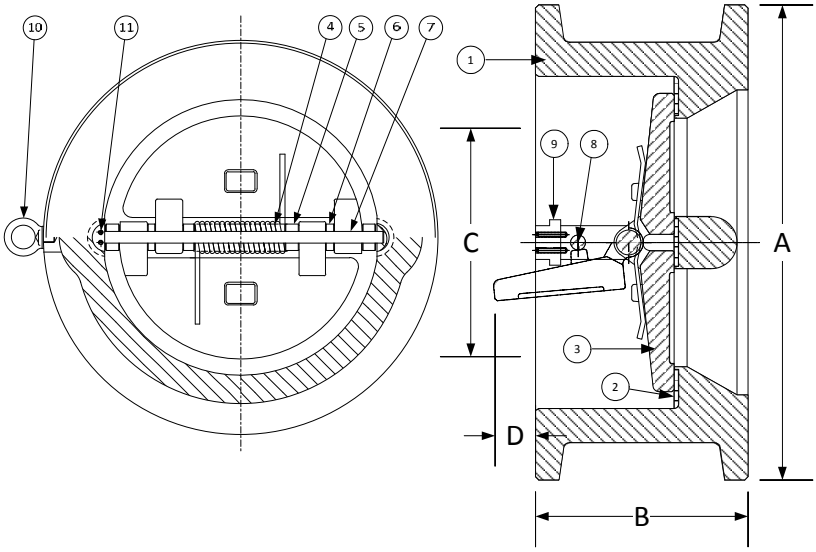

PARTS LIST		
ITEM	DESCRIPTION	MATERIAL
1	Body	Alloy 20 (ASTM A 351, Grade CN7M)
2	Seat	Viton O-Ring
3	Disc	Alloy 20 (ASTM A 351, Grade CN7M)
4	Spring	Inconel X-750
5	Spring Plate	Stainless Steel (ASTM A 182, Grade F-316)
6	Thrust Washer	Stainless Steel (ASTM A 182, Grade F-316)
7	Hinge Pin	Stainless Steel (ASTM A 182, Grade F-316)
8	Stop Pin	Stainless Steel (ASTM A 182, Grade F-316)
9	Locating Piece	Stainless Steel (ASTM A 182, Grade F-316)
10	Lifting Lug	Carbon Steel
11	Screw	Stainless Steel (316)

Above "Standard" Product Number – **DD5R-A2-A24IX**
Other Options - Reference C2 for available materials.

SIZE		DIMENSIONS								WEIGHTS	
		A		B		C*		D			
in	mm	in	mm	in	mm	in	mm	in	mm	lbs	kgs
2	50	4-3/8	111	2-3/8	60	1-15/16	49	-	-	7	3
2-1/2	65	5-1/8	130	2-5/8	67	2-11/32	60	1/8	3	11	5
3	80	5-7/8	149	2-7/8	73	2-29/32	74	1/4	6	15	7
4	100	7-5/8	194	3-1/8	79	3-53/64	97	7/8	22	26	12
5	125	9-1/2	241	4-1/8	105	4-13/16	122	1	25	50	23
6	150	10-1/2	267	5-3/8	136	5-49/64	146	1-7/16	36	80	36
8	200	12-5/8	321	6-1/2	165	7-5/8	194	2	51	135	61
10	250	15-3/4	400	8-3/8	213	9-9/16	243	2-9/32	58	238	108
12	300	18	457	9	229	11-3/8	289	3-15/32	88	333	151
14	350	19-3/8	492	10-3/4	273	12-1/2	318	2-3/4	70	455	206
16	400	22-1/4	565	12	305	14-5/16	364	4-5/16	110	640	290
18	450	24-1/8	613	14-1/4	362	16-1/8	410	3-11/16	94	890	404
20	500	26-7/8	386	14-1/2	368	17-15/16	456	5-5/16	135	1120	508
24	600	31-1/8	791	17-1/4	438	21-9/16	548	6-9/16	167	2040	925
30	750	38-1/4	972	19-7/8	505	28-3/4	730	9-9/16	243	3375	1531
36	900	44-1/2	1130	25	635	33-3/4	857	11-15/16	303	6300	2858
42	1050	48	1219	27-5/8	702	39-1/2	1003	14-1/4	362	8447	3832

*Minimum companion flange bore.

Sizes 30" and larger fit **Series A** flanges.

Seat Material	Operating Temperature**	
	°F	°C
Buna-N	-20 to 250	-29 to 121
Viton	-20 to 400	-29 to 204
EPDM	-40 to 300	-40 to 149

**Subject to limitations of body material.

Applicable Standards
• Design ASME B16.5
• Design ASME B16.34
• Testing API 598
• Conforms to API 594 & 6D
• MSS SP – 6
• MSS SP – 25
• MSS SP – 55

FLOW COEFFICIENTS

Size	2"	2½"	3"	4"	5"	6"
C_v	48	98	170	290	495	720
Size	**8"**	**10"**	**12"**	**14"**	**16"**	**18"**
C_v	1800	2600	4300	5500	7200	9400
Size	**20"**	**24"**	**30"**	**36"**	**42"**	
C_v	12600	19000	37500	60000	89000	

KECKLEY

TECHNICAL DATA
DIMENSIONS AND WEIGHTS

Style DD

Retainerless Wafer Body
Double Disc Check Valve, 900 lb.
Alloy 20 (ASTM A 351, Grade CN7M)

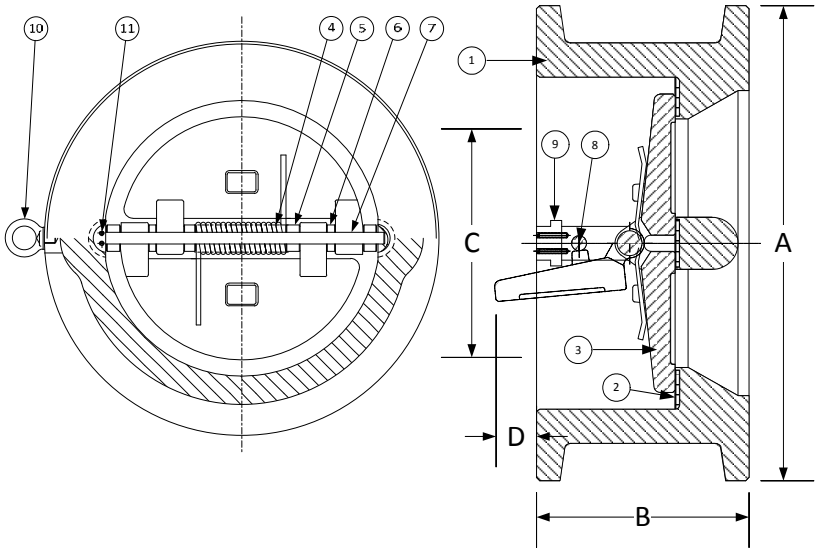

PARTS LIST		
ITEM	DESCRIPTION	MATERIAL
1	Body	Alloy 20 (ASTM A 351, Grade CN7M)
2	Seat	Viton O-Ring
3	Disc	Alloy 20 (ASTM A 351, Grade CN7M)
4	Spring	Inconel X-750
5	Spring Plate	Stainless Steel (ASTM A 182, Grade F-316)
6	Thrust Washer	Stainless Steel (ASTM A 182, Grade F-316)
7	Hinge Pin	Stainless Steel (ASTM A 182, Grade F-316)
8	Stop Pin	Stainless Steel (ASTM A 182, Grade F-316)
9	Locating Piece	Stainless Steel (ASTM A 182, Grade F-316)
10	Lifting Lug	Carbon Steel
11	Screw	Stainless Steel (316)

Above "Standard" Product Number – **DD6R-A2-A24IX**
Other Options - Reference C2 for available materials.

SIZE		DIMENSIONS								WEIGHTS	
		A		B		C*		D			
in	mm	in	mm	in	mm	in	mm	in	mm	lbs	kgs
2	50	5-5/8	143	2-3/4	70	1-11/16	43	-	-	14	6
2-1/2	65	6-1/2	165	3-1/4	83	2-1/8	54	1/16	2	16	7
3	80	6-5/8	168	3-1/4	83	2-5/8	67	5/16	8	24	11
4	100	8-1/8	206	4	102	3-7/16	87	9/16	14	40	18
5	125	9-3/4	248	-	-	4-5/16	110	-	-	-	-
6	150	11-3/8	289	6-1/4	159	5-3/16	132	1-1/16	27	115	52
8	200	14-1/8	359	8-1/8	206	6-13/16	173	1-13/32	36	229	104
10	250	17-1/8	435	9-1/2	241	8-1/2	216	1-13/16	46	388	176
12	300	19-5/8	498	11-1/2	292	10-1/8	257	2-5/16	59	540	245
14	350	20-1/2	521	14	356	11-1/2	292	2	51	926	420
16	400	22-5/8	575	15-1/8	384	12-13/16	325	2-5/8	67	1152	523
18	450	25-1/8	638	17-3/4	451	14-7/16	367	2-9/16	65	1318	598
20	500	27-1/2	699	17-3/4	451	17-15/16	456	5-5/16	135	1426	647
24	600	33	838	19-1/2	495	21-1/2	546	5-5/8	143	2729	1238

*Minimum companion flange bore.

Seat Material	Operating Temperature**	
	°F	°C
Buna-N	-20 to 250	-29 to 121
Viton	-20 to 400	-29 to 204
EPDM	-40 to 300	-40 to 149

**Subject to limitations of body material.

Applicable Standards
• Design ASME B16.5
• Design ASME B16.34
• Testing API 598
• Conforms to API 594 & 6D
• MSS SP – 6
• MSS SP – 25
• MSS SP – 55

FLOW COEFFICIENTS

Size	2"	2½"	3"	4"	5"	6"
C_v	48	98	170	290	495	720
Size	**8"**	**10"**	**12"**	**14"**	**16"**	**18"**
C_v	1800	2600	4300	5500	7200	9400
Size	**20"**	**24"**				
C_v	12600	19000				

KECKLEY

TECHNICAL DATA
DIMENSIONS AND WEIGHTS

Style DD

Retainerless Wafer Body
Double Disc Check Valve, 1500 lb.
Alloy 20 (ASTM A 351, Grade CN7M)

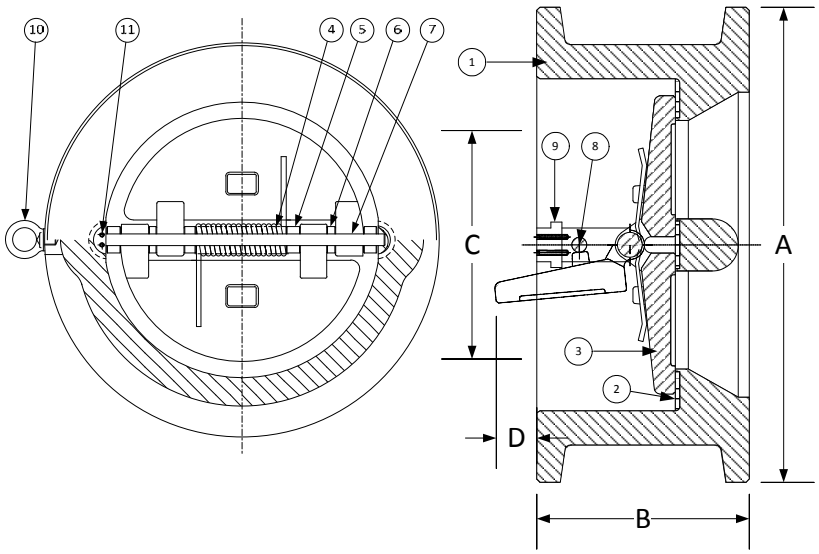

PARTS LIST		
ITEM	DESCRIPTION	MATERIAL
1	Body	Alloy 20 (ASTM A 351, Grade CF8M)
2	Seat	Viton O-Ring
3	Disc	Alloy 20 (ASTM A 351, Grade CF8M)
4	Spring	Inconel X-750
5	Spring plate	Stainless Steel (ASTM A 182, Grade F-316)
6	Thrust Washer	Stainless Steel (ASTM A 182, Grade F-316)
7	Hinge pin	Stainless Steel (ASTM A 182, Grade F-316)
8	Stop Pin	Stainless Steel (ASTM A 182, Grade F-316)
9	Locating piece	Stainless Steel (ASTM A 182, Grade F-316)
10	Lifting lug	Carbon Steel
11	Screw	Stainless Steel (316)

Above "Standard" Product Number – **DD7R-A2-A24IX**
Other Options - Reference C2 for available materials.

SIZE		DIMENSIONS								WEIGHTS	
		A		B		C*		D			
in	mm	in	mm	in	mm	in	mm	in	mm	lbs	kgs
2	50	5-5/8	143	2-3/4	70	1-11/16	43	-	-	14	6
2-1/2	65	6-1/2	165	3-1/4	83	2-1/8	54	1/16	2	16	7
3	80	6-7/8	175	3-1/4	83	2-5/8	67	5/16	8	25	11
4	100	8-1/4	210	4	102	3-7/16	87	9-1/16	14	53	20
5	125	10	254	-	-	4-5/16	110	-	-	-	-
6	150	11-1/8	283	6-1/4	159	5-3/16	132	1-1/16	27	110	50
8	200	13-7/8	352	8-1/8	206	6-13/16	173	1-13/32	36	219	99
10	250	17-1/8	435	9-3/4	248	8-1/2	216	1-11/16	43	397	180
12	300	20-1/2	521	12	305	10-1/8	257	2-1/4	57	725	329
14	350	22-3/4	578	14	356	11-1/2	292	2	51	948	430
16	400	25-1/4	641	15-1/8	384	12-13/16	325	2-5/8	67	1380	627
18	450	27-3/4	705	18-7/16	468	13-3/4	349	2-11/16	68	1900	863
20	500	29-3/4	756	21	533	14-3/4	375	4	102	2750	1247
24	600	35-1/2	902	22	559	15-1/8	384	4-1/8	105	4409	2000

*Minimum companion flange bore.

Seat Material	Operating Temperature**	
	°F	°C
Buna-N	-20 to 250	-29 to 121
Viton	-20 to 400	-29 to 204
EPDM	-40 to 300	-40 to 149

**Subject to limitations of body material.

Applicable Standards
• Design ASME B16.5
• Design ASME B16.34
• Testing API 598
• Conforms to API 594 & 6D
• MSS SP – 6
• MSS SP – 25
• MSS SP – 55

FLOW COEFFICIENTS

Size	2"	2½"	3"	4"	5"	6"
C_v	48	98	170	290	495	720
Size	8"	10"	12"	14"	16"	18"
C_v	1800	2600	4300	5500	7200	9400
Size	20"	24"				
C_v	12600	19000				

KECKLEY

TECHNICAL DATA
DIMENSIONS AND WEIGHTS

Style DD

Retainerless Wafer Body
Double Disc Check Valve, 150 lb.
Hastelloy C276 (ASTM A 494, Grade CW12MW)

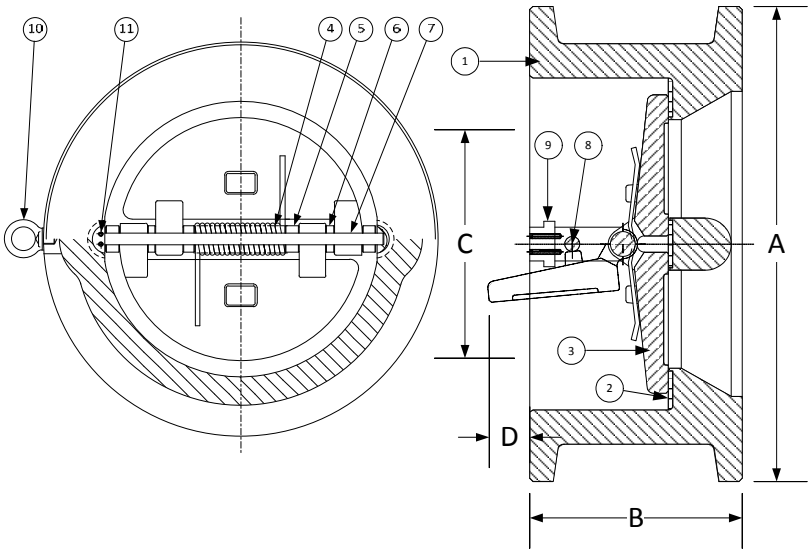

PARTS LIST		
ITEM	DESCRIPTION	MATERIAL
1	Body	Hastelloy C276 (ASTM A 494, Grade CW12MW)
2	Seat	Viton
3	Disc	Hastelloy C276 (ASTM A 494, Grade CW12MW)
4	Spring	Inconel X-750
5	Spring Plate	Stainless Steel (ASTM A 182, Grade F-316)
6	Thrust Washer	Stainless Steel (ASTM A 182, Grade F-316)
7	Hinge Pin	Stainless Steel (ASTM A 182, Grade F-316)
8	Stop Pin	Stainless Steel (ASTM A 182, Grade F-316)
9	Locating Piece	Stainless Steel (ASTM A 182, Grade F-316)
10	Lifting Lug	Carbon Steel
11	Screw	Stainless Steel (316)

Above "Standard" Product Number – **DD2R-HC-HC4IX**
Other Options - Reference C2 for available materials.

SIZE		DIMENSIONS								WEIGHTS	
		A		B		C*		D			
in	mm	in	mm	in	mm	in	mm	in	mm	lbs	kgs
2	50	4-1/8	105	2-3/8	60	1-15/16	49	-	-	6	3
2-1/2	65	4-7/8	124	2-5/8	67	2-11/32	60	-	-	10	5
3	80	5-3/8	137	2-7/8	73	2-29/32	74	1/4	6	13	6
4	100	6-7/8	175	2-7/8	73	3-53/64	97	5/8	16	17	8
5	125	7-3/4	197	3-3/8	86	4-13/16	122	7/8	22	27	12
6	150	8-3/4	222	3-7/8	98	5-49/64	146	1-3/8	35	35	16
8	200	11	279	5	127	7-5/8	194	2-1/8	54	70	32
10	250	13-3/8	340	5-3/4	146	9-9/16	243	2-3/4	70	106	48
12	300	16-1/8	410	7-1/8	181	11-3/8	289	3-1/4	83	172	78
14	350	17-3/4	451	7-1/4	184	12-1/2	318	3-1/4	83	200	91
16	400	20-1/4	514	7-1/2	191	15	381	4-7/16	113	275	125
18	450	21-5/8	549	8	203	16-7/8	429	5-3/8	137	315	143
20	500	23-7/8	606	8-5/8	219	18-13/16	478	6-5/16	160	435	197
24	600	28-1/4	718	8-3/4	222	22-5/8	575	8-1/4	210	620	281
30	750	34-3/4	883	13	330	29-1/4	743	9	229	1230	558
36	900	41-1/4	1048	15-1/4	387	35	889	11-15/16	303	2017	915
42	1050	48	1219	17	432	41	1041	15	381	2800	1270
48	1200	54-1/2	1384	20-5/8	524	47	1194	16-3/4	425	3920	1778

*Minimum companion flange bore.

Sizes 30" and larger fit **Series A** flanges.

Seat Material	Operating Temperature**	
	°F	°C
Buna-N	-20 to 250	-29 to 121
Viton	-20 to 400	-29 to 204
EPDM	-40 to 300	-40 to 149

**Subject to limitations of body material.

Applicable Standards
• Design ASME B16.5
• Design ASME B16.34
• Testing API 598
• Conforms to API 594 & 6D
• MSS SP – 6
• MSS SP – 25
• MSS SP – 55

FLOW COEFFICIENTS

Size	2"	2½"	3"	4"	5"	6"
C_v	48	98	170	290	495	720
Size	**8"**	**10"**	**12"**	**14"**	**16"**	**18"**
C_v	1800	2600	4300	5500	7200	9400
Size	**20"**	**24"**	**30"**	**36"**	**42"**	**48"**
C_v	12600	19000	37500	60000	89000	124000

KECKLEY COMPANY • 3400 Cleveland Street • Skokie, Illinois 60076 1-800-KECKLEY

KECKLEY

TECHNICAL DATA
DIMENSIONS AND WEIGHTS

Style DD

Retainerless Wafer Body
Double Disc Check Valve, 300 lb.
Hastelloy C276 (ASTM A 494, Grade CW12MW)

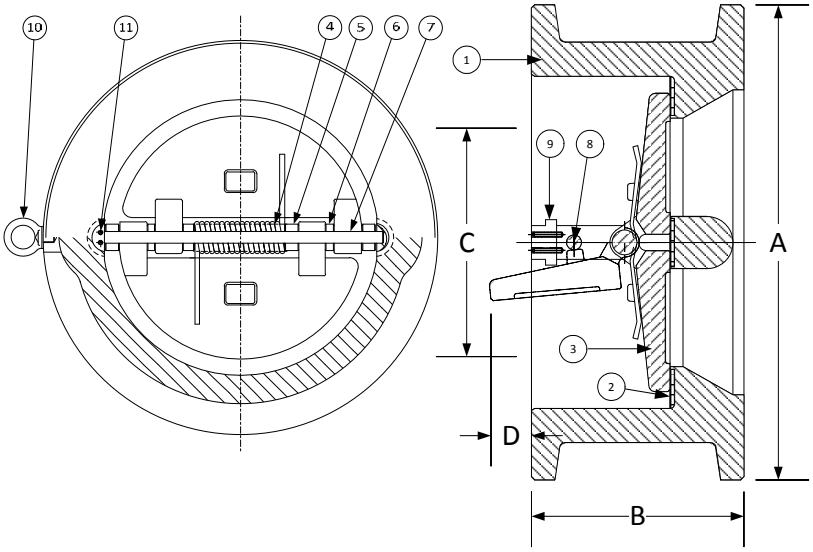

PARTS LIST		
ITEM	DESCRIPTION	MATERIAL
1	Body	Hastelloy C276 (ASTM A 494, Grade CW12MW)
2	Seat	Viton O-Ring
3	Disc	Hastelloy C276 (ASTM A 494, Grade CW12MW)
4	Spring	Inconel X-750
5	Spring Plate	Stainless Steel (ASTM A 182, Grade F-316)
6	Thrust Washer	Stainless Steel (ASTM A 182, Grade F-316)
7	Hinge Pin	Stainless Steel (ASTM A 182, Grade F-316)
8	Stop Pin	Stainless Steel (ASTM A 182, Grade F-316)
9	Locating Piece	Stainless Steel (ASTM A 182, Grade F-316)
10	Lifting Lug	Carbon Steel
11	Screw	Stainless Steel (316)

Above "Standard" Product Number – **DD4R-HC-HC4IX**
Other Options - Reference C2 for available materials.

SIZE		DIMENSIONS								WEIGHTS	
		A		B		C*		D			
in	mm	in	mm	in	mm	in	mm	in	mm	lbs	kgs
2	50	4-3/8	111	2-3/8	60	1-15/16	49	-	-	7	3
2-1/2	65	5-1/8	130	2-5/8	67	2-11/32	60	-	-	11	5
3	80	5-7/8	149	2-7/8	73	2-29/32	74	1/4	6	15	7
4	100	7-1/8	181	2-7/8	73	3-53-64	97	5/8	16	18	8
5	125	8-1/2	216	3-3/8	86	4-13/16	122	7/8	22	35	16
6	150	9-7/8	251	3-7/8	98	5-49/64	146	1-3/8	35	45	20
8	200	12-1/8	308	5	127	7-5/8	194	2-1/8	54	82	37
10	250	14-1/4	362	5-3/4	146	9-9/16	243	2-3/4	70	125	57
12	300	16-5/8	422	7-1/8	181	11-3/8	289	3-1/4	83	200	91
14	350	19-1/8	486	8-3/4	222	12-1/2	318	3-3/16	81	325	147
16	400	21-1/4	540	9-1/8	232	14-5/16	364	4-1/8	105	415	188
18	450	23-1/2	597	10-3/8	264	16-7/8	429	4-13/16	122	555	252
20	500	25-3/4	654	11-1/2	292	17-15/16	456	5-5/8	143	725	329
24	600	30-1/2	775	12-1/2	318	21-9/16	548	7-1/16	179	1100	499
30	750	37-1/2	953	14-1/2	3968	28-3/4	730	9-1/16	230	2050	930
36	900	44	1118	19	483	35	889	11-3/16	284	3573	1621
42	1050	45-7/8	1289	22-3/8	568	41	1041	14-3/4	375	4723	2147
48	1200	52-1/8	1492	24-3/4	629	47	1194	16-1/2	419	6090	2768

*Minimum companion flange bore.

Sizes 30" and larger fit **Series A** flanges.

Seat Material	Operating Temperature**	
	°F	°C
Buna-N	-20 to 250	-29 to 121
Viton	-20 to 400	-29 to 204
EPDM	-40 to 300	-40 to 149

**Subject to limitations of body material.

Applicable Standards
• Design ASME B16.5
• Design ASME B16.34
• Testing API 598
• Conforms to API 594 & 6D
• MSS SP – 6
• MSS SP – 25
• MSS SP – 55

FLOW COEFFICIENTS

Size	2"	2½"	3"	4"	5"	6"
C_v	48	98	170	290	495	720
Size	**8"**	**10"**	**12"**	**14"**	**16"**	**18"**
C_v	1800	2600	4300	5500	7200	9400
Size	**20"**	**24"**	**30"**	**36"**	**42"**	**48"**
C_v	12600	19000	37500	60000	89000	124000

KECKLEY

TECHNICAL DATA
DIMENSIONS AND WEIGHTS

Style DD

Retainerless Wafer Body
Double Disc Check Valve, 600 lb.
Hastelloy C276 (ASTM A 494, Grade CW12MW)

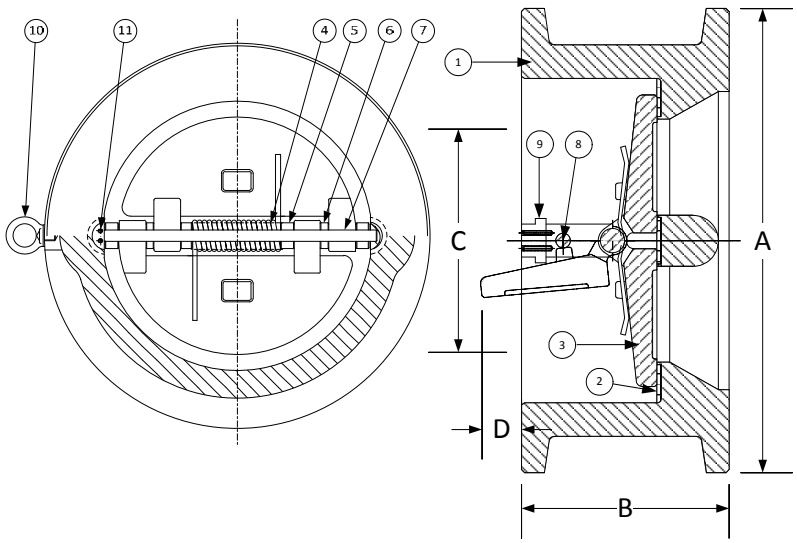

PARTS LIST		
ITEM	DESCRIPTION	MATERIAL
1	Body	Hastelloy C276(ASTM A 494, Grade CW12MW)
2	Seat	Viton O-Ring
3	Disc	Hastelloy C276(ASTM A 494, Grade CW12MW)
4	Spring	Inconel X-750
5	Spring Plate	Stainless Steel (ASTM A 182, Grade F-316)
6	Thrust Washer	Stainless Steel (ASTM A 182, Grade F-316)
7	Hinge Pin	Stainless Steel (ASTM A 182, Grade F-316)
8	Stop Pin	Stainless Steel (ASTM A 182, Grade F-316)
9	Locating Piece	Stainless Steel (ASTM A 182, Grade F-316)
10	Lifting Lug	Carbon Steel
11	Screw	Stainless Steel (316)

Above "Standard" Product Number – **DD5R-HC-HC4IX**
Other Options - Reference C2 for available materials.

SIZE		DIMENSIONS								WEIGHTS	
		A		B		C*		D			
in	mm	in	mm	in	mm	in	mm	in	mm	lbs	kgs
2	50	4-3/8	111	2-3/8	60	1-15/16	49	-	-	7	3
2-1/2	65	5-1/8	130	2-5/8	67	2-11/32	60	1/8	3	11	5
3	80	5-7/8	149	2-7/8	73	2-29/32	74	1/4	6	15	7
4	100	7-5/8	194	3-1/8	79	3-53/64	97	7/8	22	26	12
5	125	9-1/2	241	4-1/8	105	4-13/16	122	1	25	50	23
6	150	10-1/2	267	5-3/8	136	5-49/64	146	1-7/16	36	80	36
8	200	12-5/8	321	6-1/2	165	7-5/8	194	2	51	135	61
10	250	15-3/4	400	8-3/8	213	9-9/16	243	2-9/32	58	238	108
12	300	18	457	9	229	11-3/8	289	3-15/32	88	333	151
14	350	19-3/8	492	10-3/4	273	12-1/2	318	2-3/4	70	455	206
16	400	22-1/4	565	12	305	14-5/16	364	4-5/16	110	640	290
18	450	24-1/8	613	14-1/4	362	16-1/8	410	3-11/16	94	890	404
20	500	26-7/8	386	14-1/2	368	17-15/16	456	5-5/16	135	1120	508
24	600	31-1/8	791	17-1/4	438	21-9/16	548	6-9/16	167	2040	925
30	750	38-1/4	972	19-7/8	505	28-3/4	730	9-9/16	243	3375	1531
36	900	44-1/2	1130	25	635	33-3/4	857	11-15/16	303	6300	2858
42	1050	48	1219	27-5/8	702	39-1/2	1003	14-1/4	362	8447	3832

*Minimum companion flange bore.

Sizes 30" and larger fit **Series A** flanges.

Seat Material	Operating Temperature**	
	°F	°C
Buna-N	-20 to 250	-29 to 121
Viton	-20 to 400	-29 to 204
EPDM	-40 to 300	-40 to 149

**Subject to limitations of body material.

Applicable Standards
• Design ASME B16.5
• Design ASME B16.34
• Testing API 598
• Conforms to API 594 & 6D
• MSS SP – 6
• MSS SP – 25
• MSS SP – 55

FLOW COEFFICIENTS

Size	2"	2½"	3"	4"	5"	6"
C_v	48	98	170	290	495	720
Size	8"	10"	12"	14"	16"	18"
C_v	1800	2600	4300	5500	7200	9400
Size	20"	24"	30"	36"	42"	
C_v	12600	19000	37500	60000	89000	

KECKLEY COMPANY • 3400 Cleveland Street • Skokie, Illinois 60076 1-800-KECKLEY

KECKLEY

TECHNICAL DATA
DIMENSIONS AND WEIGHTS

Style DD

Retainerless Wafer Body
Double Disc Check Valve, 900 lb.
Hastelloy C276 (ASTM A 494, Grade CW12MW)

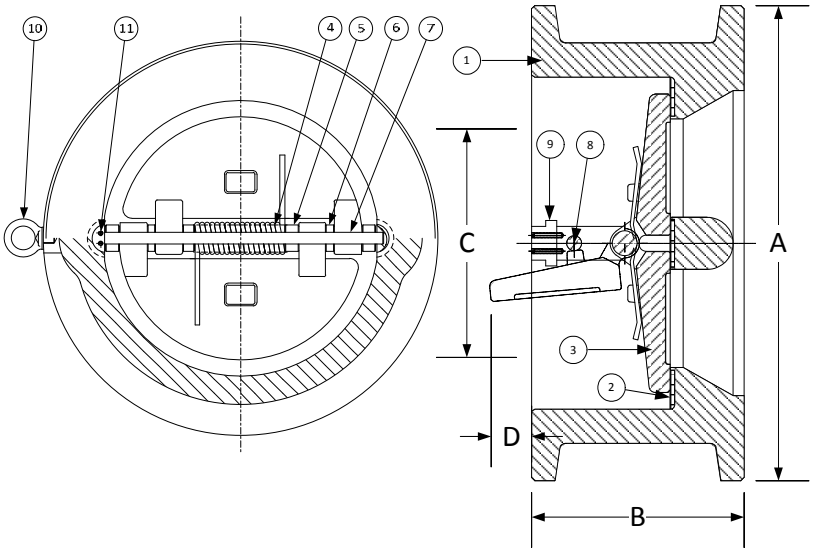

PARTS LIST		
ITEM	DESCRIPTION	MATERIAL
1	Body	Hastelloy C276 (ASTM A 494, Grade CW12MW)
2	Seat	Viton O-Ring
3	Disc	Hastelloy C276 (ASTM A 494, Grade CW12MW)
4	Spring	Inconel X-750
5	Spring Plate	Stainless Steel (ASTM A 182, Grade F-316)
6	Thrust Washer	Stainless Steel (ASTM A 182, Grade F-316)
7	Hinge Pin	Stainless Steel (ASTM A 182, Grade F-316)
8	Stop Pin	Stainless Steel (ASTM A 182, Grade F-316)
9	Locating Piece	Stainless Steel (ASTM A 182, Grade F-316)
10	Lifting Lug	Carbon Steel
11	Screw	Stainless Steel (316)

Above "Standard" Product Number – **DD6R-HC-HC4IX**
Other Options - Reference C2 for available materials.

SIZE		DIMENSIONS								WEIGHTS	
		A		B		C*		D			
in	mm	in	mm	in	mm	in	mm	in	mm	lbs	kgs
2	50	5-5/8	143	2-3/4	70	1-11/16	43	-	-	14	6
2-1/2	65	6-1/2	165	3-1/4	83	2-1/8	54	1/16	2	16	7
3	80	6-5/8	168	3-1/4	83	2-5/8	67	5/16	8	24	11
4	100	8-1/8	206	4	102	3-7/16	87	9/16	14	40	18
5	125	9-3/4	248	-	-	4-5/16	110	-	-	-	-
6	150	11-3/8	289	6-1/4	159	5-3/16	132	1-1/16	27	115	52
8	200	14-1/8	359	8-1/8	206	6-13/16	173	1-13/32	36	229	104
10	250	17-1/8	435	9-1/2	241	8-1/2	216	1-13/16	46	388	176
12	300	19-5/8	498	11-1/2	292	10-1/8	257	2-5/16	59	540	245
14	350	20-1/2	521	14	356	11-1/2	292	2	51	926	420
16	400	22-5/8	575	15-1/8	384	12-13/16	325	2-5/8	67	1152	523
18	450	25-1/8	638	17-3/4	451	14-7/16	367	2-9/16	65	1318	598
20	500	27-1/2	699	17-3/4	451	17-15/16	456	5-5/16	135	1426	647
24	600	33	838	19-1/2	495	21-1/2	546	5-5/8	143	2729	1238

*Minimum companion flange bore.

Seat Material	Operating Temperature**	
	°F	°C
Buna-N	-20 to 250	-29 to 121
Viton	-20 to 400	-29 to 204
EPDM	-40 to 300	-40 to 149

**Subject to limitations of body material.

Applicable Standards
• Design ASME B16.5
• Design ASME B16.34
• Testing API 598
• Conforms to API 594 & 6D
• MSS SP – 6
• MSS SP – 25
• MSS SP – 55

FLOW COEFFICIENTS

Size	2"	2½"	3"	4"	5"	6"
C_v	48	98	170	290	495	720
Size	8"	10"	12"	14"	16"	18"
C_v	1800	2600	4300	5500	7200	9400
Size	20"	24"				
C_v	12600	19000				

KECKLEY

TECHNICAL DATA
DIMENSIONS AND WEIGHTS

Style DD

Retainerless Wafer Body
Double Disc Check Valve, 1500 lb.
Hastelloy C276 (ASTM A 494, Grade CW12MW)

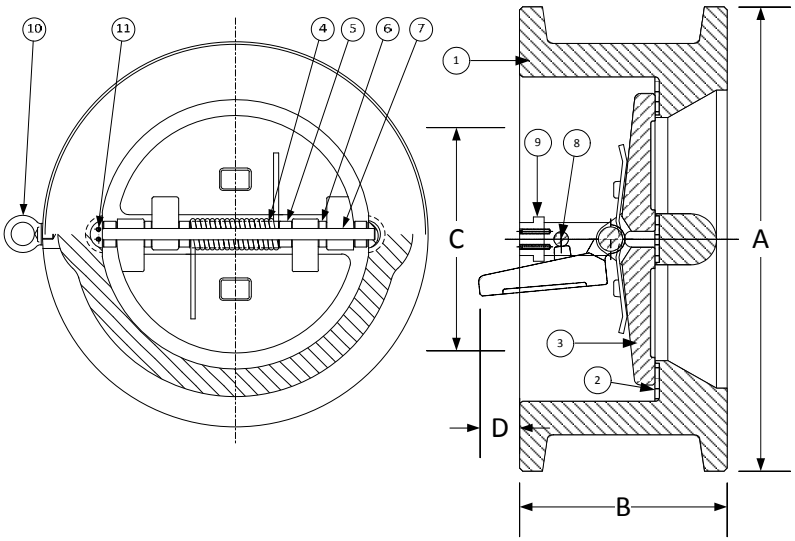

PARTS LIST		
ITEM	DESCRIPTION	MATERIAL
1	Body	Hastelloy C276 (ASTM A 494, Grade CW12MW)
2	Seat	Viton O-Ring
3	Disc	Hastelloy C276 (ASTM A 494, Grade CW12MW)
4	Spring	Inconel X-750
5	Spring plate	Stainless Steel (ASTM A 182, Grade F-316)
6	Thrust Washer	Stainless Steel (ASTM A 182, Grade F-316)
7	Hinge pin	Stainless Steel (ASTM A 182, Grade F-316)
8	Stop Pin	Stainless Steel (ASTM A 182, Grade F-316)
9	Locating piece	Stainless Steel (ASTM A 182, Grade F-316)
10	Lifting lug	Carbon Steel
11	Screw	Stainless Steel (316)

Above "Standard" Product Number – **DD7R-HC-HC4IX**
Other Options - Reference C2 for available materials.

SIZE		DIMENSIONS								WEIGHTS	
		A		B		C*		D			
in	mm	in	mm	in	mm	in	mm	in	mm	lbs	kgs
2	50	5-5/8	143	2-3/4	70	1-11/16	43	-	-	14	6
2-1/2	65	6-1/2	165	3-1/4	83	2-1/8	54	1/16	2	16	7
3	80	6-7/8	175	3-1/4	83	2-5/8	67	5/16	8	25	11
4	100	8-1/4	210	4	102	3-7/16	87	9-1/16	14	53	20
5	125	10	254	-	-	4-5/16	110	-	-	-	-
6	150	11-1/8	283	6-1/4	159	5-3/16	132	1-1/16	27	110	50
8	200	13-7/8	352	8-1/8	206	6-13/16	173	1-13/32	36	219	99
10	250	17-1/8	435	9-3/4	248	8-1/2	216	1-11/16	43	397	180
12	300	20-1/2	521	12	305	10-1/8	257	2-1/4	57	725	329
14	350	22-3/4	578	14	356	11-1/2	292	2	51	948	430
16	400	25-1/4	641	15-1/8	384	12-13/16	325	2-5/8	67	1380	627
18	450	27-3/4	705	18-7/16	468	13-3/4	349	2-11/16	68	1900	863
20	500	29-3/4	756	21	533	14-3/4	375	4	102	2750	1247
24	600	35-1/2	902	22	559	15-1/8	384	4-1/8	105	4409	2000

*Minimum companion flange bore.

Seat Material	Operating Temperature**	
	°F	°C
Buna-N	-20 to 250	-29 to 121
Viton	-20 to 400	-29 to 204
EPDM	-40 to 300	-40 to 149

**Subject to limitations of body material.

Applicable Standards
• Design ASME B16.5
• Design ASME B16.34
• Testing API 598
• Conforms to API 594 & 6D
• MSS SP – 6
• MSS SP – 25
• MSS SP – 55

FLOW COEFFICIENTS

Size	2"	2½"	3"	4"	5"	6"
C_v	48	98	170	290	495	720
Size	8"	10"	12"	14"	16"	18"
C_v	1800	2600	4300	5500	7200	9400
Size	20"	24"				
C_v	12600	19000				

KECKLEY

TECHNICAL DATA
DIMENSIONS AND WEIGHTS

Style DD

Retainerless Wafer Body
Double Disc Check Valve, 150 lb.
Monel (ASTM A 494, Grade M35-2)

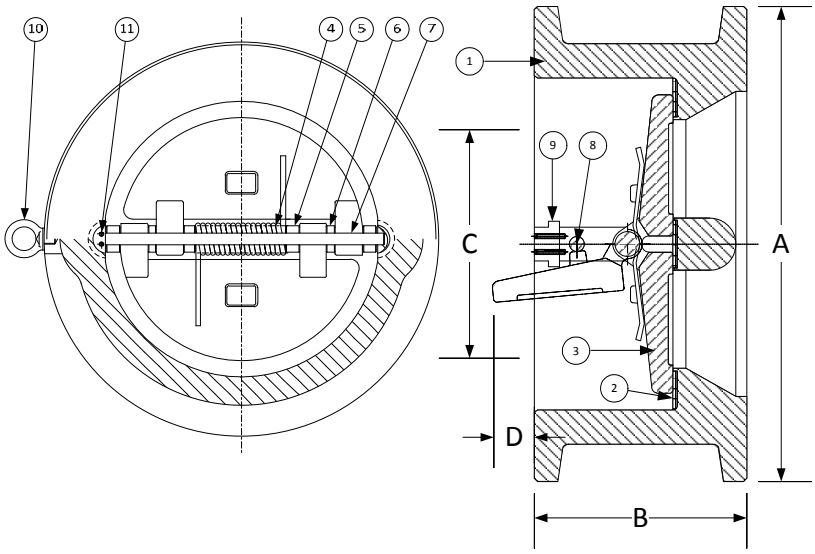

PARTS LIST		
ITEM	DESCRIPTION	MATERIAL
1	Body	Monel (ASTM A 494, Grade M35-2)
2	Seat	Viton
3	Disc	Monel (ASTM A 494, Grade M35-2)
4	Spring	Inconel X-750
5	Spring Plate	Stainless Steel (ASTM A 182, Grade F-316)
6	Thrust Washer	Stainless Steel (ASTM A 182, Grade F-316)
7	Hinge Pin	Stainless Steel (ASTM A 182, Grade F-316)
8	Stop Pin	Stainless Steel (ASTM A 182, Grade F-316)
9	Locating Piece	Stainless Steel (ASTM A 182, Grade F-316)
10	Lifting Lug	Carbon Steel
11	Screw	Stainless Steel (316)

Above "Standard" Product Number – **DD2R-ML-ML4IX**
Other Options - Reference C2 for available materials.

SIZE		DIMENSIONS								WEIGHTS	
		A		B		C*		D			
in	mm	in	mm	in	mm	in	mm	in	mm	lbs	kgs
2	50	4-1/8	105	2-3/8	60	1-15/16	49	-	-	6	3
2-1/2	65	4-7/8	124	2-5/8	67	2-11/32	60	-	-	10	5
3	80	5-3/8	137	2-7/8	73	2-29/32	74	1/4	6	13	6
4	100	6-7/8	175	2-7/8	73	3-53/64	97	5/8	16	17	8
5	125	7-3/4	197	3-3/8	86	4-13/16	122	7/8	22	27	12
6	150	8-3/4	222	3-7/8	98	5-49/64	146	1-3/8	35	35	16
8	200	11	279	5	127	7-5/8	194	2-1/8	54	70	32
10	250	13-3/8	340	5-3/4	146	9-9/16	243	2-3/4	70	106	48
12	300	16-1/8	410	7-1/8	181	11-3/8	289	3-1/4	83	172	78
14	350	17-3/4	451	7-1/4	184	12-1/2	318	3-1/4	83	200	91
16	400	20-1/4	514	7-1/2	191	15	381	4-7/16	113	275	125
18	450	21-5/8	549	8	203	16-7/8	429	5-3/8	137	315	143
20	500	23-7/8	606	8-5/8	219	18-13/16	478	6-5/16	160	435	197
24	600	28-1/4	718	8-3/4	222	22-5/8	575	8-1/4	210	620	281
30	750	34-3/4	883	13	330	29-1/4	743	9	229	1230	558
36	900	41-1/4	1048	15-1/4	387	35	889	11-15/16	303	2017	915
42	1050	48	1219	17	432	41	1041	15	381	2800	1270
48	1200	54-1/2	1384	20-5/8	524	47	1194	16-3/4	425	3920	1778

*Minimum companion flange bore.

Sizes 30" and larger fit **Series A** flanges.

Seat Material	Operating Temperature**	
	°F	°C
Buna-N	-20 to 250	-29 to 121
Viton	-20 to 400	-29 to 204
EPDM	-40 to 300	-40 to 149

**Subject to limitations of body material.

Applicable Standards
• Design ASME B16.5
• Design ASME B16.34
• Testing API 598
• Conforms to API 594 & 6D
• MSS SP – 6
• MSS SP – 25
• MSS SP – 55

FLOW COEFFICIENTS

Size	2"	2½"	3"	4"	5"	6"
C_v	48	98	170	290	495	720
Size	**8"**	**10"**	**12"**	**14"**	**16"**	**18"**
C_v	1800	2600	4300	5500	7200	9400
Size	**20"**	**24"**	**30"**	**36"**	**42"**	**48"**
C_v	12600	19000	37500	60000	89000	124000

KECKLEY

TECHNICAL DATA
DIMENSIONS AND WEIGHTS

Style DD

Retainerless Wafer Body
Double Disc Check Valve, 300 lb.
Monel (ASTM A 494, Grade M35-2)

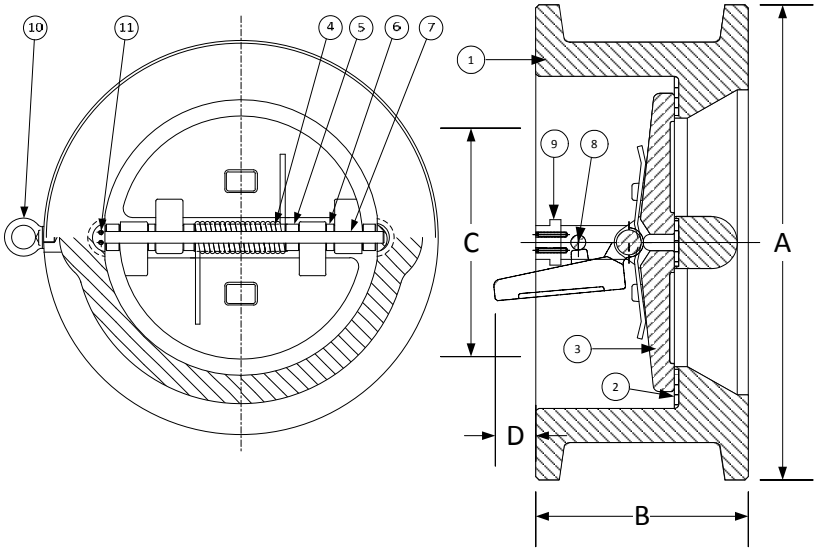

PARTS LIST		
ITEM	DESCRIPTION	MATERIAL
1	Body	Monel (ASTM A 494, Grade M35-2)
2	Seat	Viton O-Ring
3	Disc	Monel (ASTM A 494, Grade M35-2)
4	Spring	Inconel X-750
5	Spring Plate	Stainless Steel (ASTM A 182, Grade F-316)
6	Thrust Washer	Stainless Steel (ASTM A 182, Grade F-316)
7	Hinge Pin	Stainless Steel (ASTM A 182, Grade F-316)
8	Stop Pin	Stainless Steel (ASTM A 182, Grade F-316)
9	Locating Piece	Stainless Steel (ASTM A 182, Grade F-316)
10	Lifting Lug	Carbon Steel
11	Screw	Stainless Steel (316)

Above "Standard" Product Number – **DD4R-ML-ML4IX**
Other Options - Reference C2 for available materials.

SIZE		DIMENSIONS								WEIGHTS	
		A		B		C*		D			
in	mm	in	mm	in	mm	in	mm	in	mm	lbs	kgs
2	50	4-3/8	111	2-3/8	60	1-15/16	49	-	-	7	3
2-1/2	65	5-1/8	130	2-5/8	67	2-11/32	60	-	-	11	5
3	80	5-7/8	149	2-7/8	73	2-29/32	74	1/4	6	15	7
4	100	7-1/8	181	2-7/8	73	3-53-64	97	5/8	16	18	8
5	125	8-1/2	216	3-3/8	86	4-13/16	122	7/8	22	35	16
6	150	9-7/8	251	3-7/8	98	5-49/64	146	1-3/8	35	45	20
8	200	12-1/8	308	5	127	7-5/8	194	2-1/8	54	82	37
10	250	14-1/4	362	5-3/4	146	9-9/16	243	2-3/4	70	125	57
12	300	16-5/8	422	7-1/8	181	11-3/8	289	3-1/4	83	200	91
14	350	19-1/8	486	8-3/4	222	12-1/2	318	3-3/16	81	325	147
16	400	21-1/4	540	9-1/8	232	14-5/16	364	4-1/8	105	415	188
18	450	23-1/2	597	10-3/8	264	16-7/8	429	4-13/16	122	555	252
20	500	25-3/4	654	11-1/2	292	17-15/16	456	5-5/8	143	725	329
24	600	30-1/2	775	12-1/2	318	21-9/16	548	7-1/16	179	1100	499
30	750	37-1/2	953	14-1/2	3968	28-3/4	730	9-1/16	230	2050	930
36	900	44	1118	19	483	35	889	11-3/16	284	3573	1621
42	1050	45-7/8	1289	22-3/8	568	41	1041	14-3/4	375	4723	2147
48	1200	52-1/8	1492	24-3/4	629	47	1194	16-1/2	419	6090	2768

*Minimum companion flange bore.

Sizes 30" and larger fit **Series A** flanges.

Seat Material	Operating Temperature**	
	°F	°C
Buna-N	-20 to 250	-29 to 121
Viton	-20 to 400	-29 to 204
EPDM	-40 to 300	-40 to 149

**Subject to limitations of body material.

Applicable Standards
• Design ASME B16.5
• Design ASME B16.34
• Testing API 598
• Conforms to API 594 & 6D
• MSS SP – 6
• MSS SP – 25
• MSS SP – 55

FLOW COEFFICIENTS

Size	2"	2½"	3"	4"	5"	6"
C_v	48	98	170	290	495	720
Size	8"	10"	12"	14"	16"	18"
C_v	1800	2600	4300	5500	7200	9400
Size	20"	24"	30"	36"	42"	48"
C_v	12600	19000	37500	60000	89000	124000

KECKLEY COMPANY • 3400 Cleveland Street • Skokie, Illinois 60076 1-800-KECKLEY

KECKLEY

TECHNICAL DATA
DIMENSIONS AND WEIGHTS

Style DD

Retainerless Wafer Body
Double Disc Check Valve, 600 lb.
Monel (ASTM A 494, Grade M35-2)

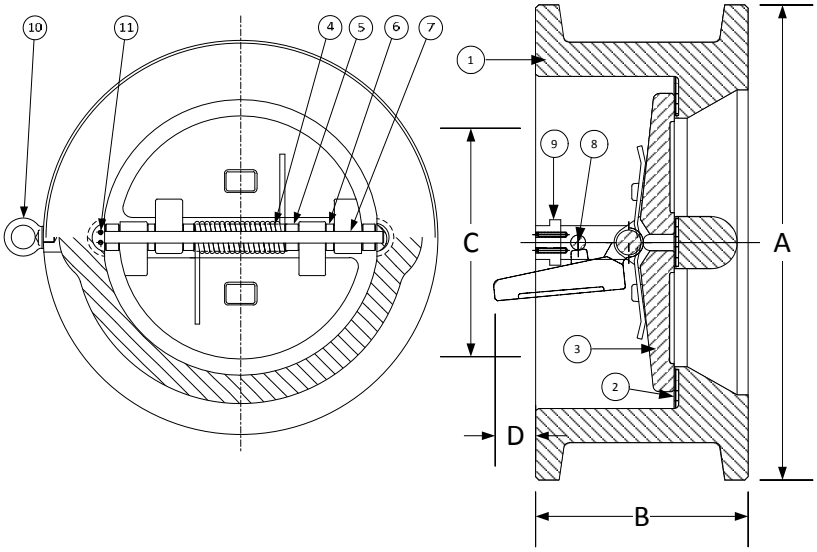

PARTS LIST		
ITEM	DESCRIPTION	MATERIAL
1	Body	Monel (ASTM A 494, Grade M35-2)
2	Seat	Viton O-Ring
3	Disc	Monel (ASTM A 494, Grade M35-2)
4	Spring	Inconel X-750
5	Spring Plate	Stainless Steel (ASTM A 182, Grade F-316)
6	Thrust Washer	Stainless Steel (ASTM A 182, Grade F-316)
7	Hinge Pin	Stainless Steel (ASTM A 182, Grade F-316)
8	Stop Pin	Stainless Steel (ASTM A 182, Grade F-316)
9	Locating Piece	Stainless Steel (ASTM A 182, Grade F-316)
10	Lifting Lug	Carbon Steel
11	Screw	Stainless Steel (316)

Above "Standard" Product Number – **DD5R-ML-ML4IX**
Other Options - Reference C2 for available materials.

SIZE		DIMENSIONS								WEIGHTS	
		A		B		C*		D			
in	mm	in	mm	in	mm	in	mm	in	mm	lbs	kgs
2	50	4-3/8	111	2-3/8	60	1-15/16	49	-	-	7	3
2-1/2	65	5-1/8	130	2-5/8	67	2-11/32	60	1/8	3	11	5
3	80	5-7/8	149	2-7/8	73	2-29/32	74	1/4	6	15	7
4	100	7-5/8	194	3-1/8	79	3-53/64	97	7/8	22	26	12
5	125	9-1/2	241	4-1/8	105	4-13/16	122	1	25	50	23
6	150	10-1/2	267	5-3/8	136	5-49/64	146	1-7/16	36	80	36
8	200	12-5/8	321	6-1/2	165	7-5/8	194	2	51	135	61
10	250	15-3/4	400	8-3/8	213	9-9/16	243	2-9/32	58	238	108
12	300	18	457	9	229	11-3/8	289	3-15/32	88	333	151
14	350	19-3/8	492	10-3/4	273	12-1/2	318	2-3/4	70	455	206
16	400	22-1/4	565	12	305	14-5/16	364	4-5/16	110	640	290
18	450	24-1/8	613	14-1/4	362	16-1/8	410	3-11/16	94	890	404
20	500	26-7/8	386	14-1/2	368	17-15/16	456	5-5/16	135	1120	508
24	600	31-1/8	791	17-1/4	438	21-9/16	548	6-9/16	167	2040	925
30	750	38-1/4	972	19-7/8	505	28-3/4	730	9-9/16	243	3375	1531
36	900	44-1/2	1130	25	635	33-3/4	857	11-15/16	303	6300	2858
42	1050	48	1219	27-5/8	702	39-1/2	1003	14-1/4	362	8447	3832

*Minimum companion flange bore.

Sizes 30" and larger fit **Series A** flanges.

Seat Material	Operating Temperature**	
	°F	°C
Buna-N	-20 to 250	-29 to 121
Viton	-20 to 400	-29 to 204
EPDM	-40 to 300	-40 to 149

**Subject to limitations of body material.

Applicable Standards
• Design ASME B16.5
• Design ASME B16.34
• Testing API 598
• Conforms to API 594 & 6D
• MSS SP – 6
• MSS SP – 25
• MSS SP – 55

FLOW COEFFICIENTS

Size	2"	2½"	3"	4"	5"	6"
C_v	48	98	170	290	495	720
Size	**8"**	**10"**	**12"**	**14"**	**16"**	**18"**
C_v	1800	2600	4300	5500	7200	9400
Size	**20"**	**24"**	**30"**	**36"**	**42"**	
C_v	12600	19000	37500	60000	89000	

KECKLEY

TECHNICAL DATA
DIMENSIONS AND WEIGHTS

Style DD

Retainerless Wafer Body
Double Disc Check Valve, 900 lb.
Monel (ASTM A 494, Grade M35-2)

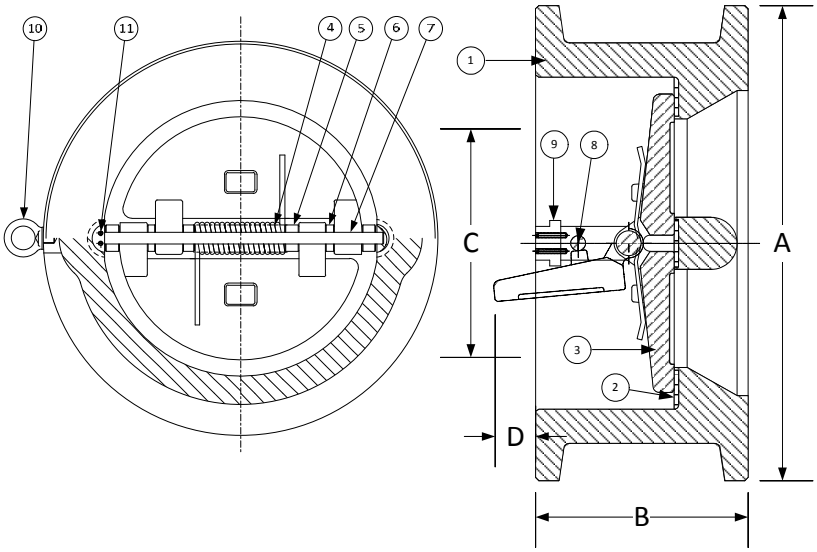

PARTS LIST		
ITEM	DESCRIPTION	MATERIAL
1	Body	Monel (ASTM A 494, Grade M35-2)
2	Seat	Viton O-Ring
3	Disc	Monel (ASTM A 494, Grade M35-2)
4	Spring	Inconel X-750
5	Spring Plate	Stainless Steel (ASTM A 182, Grade F-316)
6	Thrust Washer	Stainless Steel (ASTM A 182, Grade F-316)
7	Hinge Pin	Stainless Steel (ASTM A 182, Grade F-316)
8	Stop Pin	Stainless Steel (ASTM A 182, Grade F-316)
9	Locating Piece	Stainless Steel (ASTM A 182, Grade F-316)
10	Lifting Lug	Carbon Steel
11	Screw	Stainless Steel (316)

Above "Standard" Product Number – **DD6R-ML-ML4IX**
Other Options - Reference C2 for available materials.

SIZE		DIMENSIONS								WEIGHTS	
		A		B		C*		D			
in	mm	in	mm	in	mm	in	mm	in	mm	lbs	kgs
2	50	5-5/8	143	2-3/4	70	1-11/16	43	-	-	14	6
2-1/2	65	6-1/2	165	3-1/4	83	2-1/8	54	1/16	2	16	7
3	80	6-5/8	168	3-1/4	83	2-5/8	67	5/16	8	24	11
4	100	8-1/8	206	4	102	3-7/16	87	9/16	14	40	18
5	125	9-3/4	248	-	-	4-5/16	110	-	-	-	-
6	150	11-3/8	289	6-1/4	159	5-3/16	132	1-1/16	27	115	52
8	200	14-1/8	359	8-1/8	206	6-13/16	173	1-13/32	36	229	104
10	250	17-1/8	435	9-1/2	241	8-1/2	216	1-13/16	46	388	176
12	300	19-5/8	498	11-1/2	292	10-1/8	257	2-5/16	59	540	245
14	350	20-1/2	521	14	356	11-1/2	292	2	51	926	420
16	400	22-5/8	575	15-1/8	384	12-13/16	325	2-5/8	67	1152	523
18	450	25-1/8	638	17-3/4	451	14-7/16	367	2-9/16	65	1318	598
20	500	27-1/2	699	17-3/4	451	17-15/16	456	5-5/16	135	1426	647
24	600	33	838	19-1/2	495	21-1/2	546	5-5/8	143	2729	1238

*Minimum companion flange bore.

Seat Material	Operating Temperature**	
	°F	°C
Buna-N	-20 to 250	-29 to 121
Viton	-20 to 400	-29 to 204
EPDM	-40 to 300	-40 to 149

**Subject to limitations of body material.

Applicable Standards
• Design ASME B16.5
• Design ASME B16.34
• Testing API 598
• Conforms to API 594 & 6D
• MSS SP – 6
• MSS SP – 25
• MSS SP – 55

FLOW COEFFICIENTS

Size	2"	2½"	3"	4"	5"	6"
C_v	48	98	170	290	495	720
Size	**8"**	**10"**	**12"**	**14"**	**16"**	**18"**
C_v	1800	2600	4300	5500	7200	9400
Size	**20"**	**24"**				
C_v	12600	19000				

KECKLEY

TECHNICAL DATA
DIMENSIONS AND WEIGHTS

Style DD

Retainerless Wafer Body
Double Disc Check Valve, 1500 lb.
Monel (ASTM A 494, Grade M35-2)

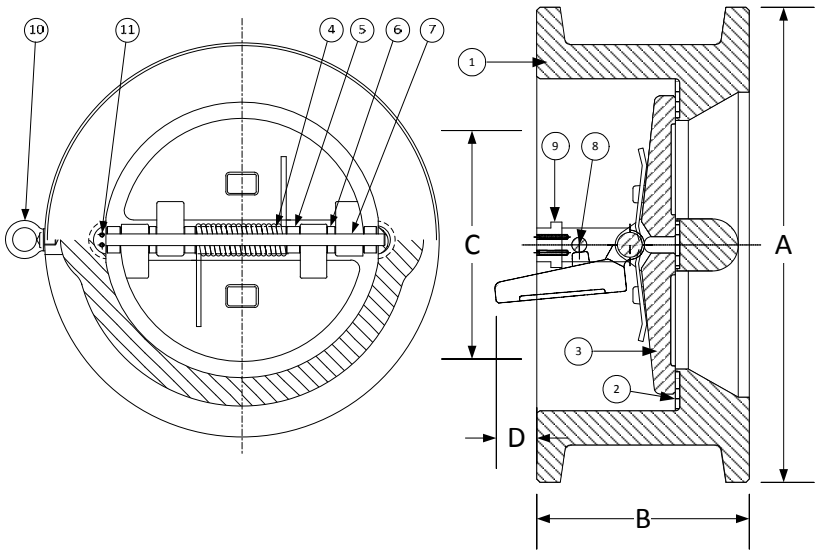

PARTS LIST		
ITEM	DESCRIPTION	MATERIAL
1	Body	Monel (ASTM A 494, Grade M35-2)
2	Seat	Viton O-Ring
3	Disc	Monel (ASTM A 494, Grade M35-2)
4	Spring	Inconel X-750
5	Spring plate	Stainless Steel (ASTM A 182, Grade F-316)
6	Thrust Washer	Stainless Steel (ASTM A 182, Grade F-316)
7	Hinge pin	Stainless Steel (ASTM A 182, Grade F-316)
8	Stop Pin	Stainless Steel (ASTM A 182, Grade F-316)
9	Locating piece	Stainless Steel (ASTM A 182, Grade F-316)
10	Lifting lug	Carbon Steel
11	Screw	Stainless Steel (316)

Above "Standard" Product Number – **DD7R-ML-ML4IX**
Other Options - Reference C2 for available materials.

SIZE		DIMENSIONS								WEIGHTS	
		A		B		C*		D			
in	mm	in	mm	in	mm	in	mm	in	mm	lbs	kgs
2	50	5-5/8	143	2-3/4	70	1-11/16	43	-	-	14	6
2-1/2	65	6-1/2	165	3-1/4	83	2-1/8	54	1/16	2	16	7
3	80	6-7/8	175	3-1/4	83	2-5/8	67	5/16	8	25	11
4	100	8-1/4	210	4	102	3-7/16	87	9-1/16	14	53	20
5	125	10	254	-	-	4-5/16	110	-	-	-	-
6	150	11-1/8	283	6-1/4	159	5-3/16	132	1-1/16	27	110	50
8	200	13-7/8	352	8-1/8	206	6-13/16	173	1-13/32	36	219	99
10	250	17-1/8	435	9-3/4	248	8-1/2	216	1-11/16	43	397	180
12	300	20-1/2	521	12	305	10-1/8	257	2-1/4	57	725	329
14	350	22-3/4	578	14	356	11-1/2	292	2	51	948	430
16	400	25-1/4	641	15-1/8	384	12-13/16	325	2-5/8	67	1380	627
18	450	27-3/4	705	18-7/16	468	13-3/4	349	2-11/16	68	1900	863
20	500	29-3/4	756	21	533	14-3/4	375	4	102	2750	1247
24	600	35-1/2	902	22	559	15-1/8	384	4-1/8	105	4409	2000

*Minimum companion flange bore.

Seat Material	Operating Temperature**	
	°F	°C
Buna-N	-20 to 250	-29 to 121
Viton	-20 to 400	-29 to 204
EPDM	-40 to 300	-40 to 149

**Subject to limitations of body material.

Applicable Standards
• Design ASME B16.5
• Design ASME B16.34
• Testing API 598
• Conforms to API 594 & 6D
• MSS SP – 6
• MSS SP – 25
• MSS SP – 55

FLOW COEFFICIENTS

Size	2"	2½"	3"	4"	5"	6"
C_v	48	98	170	290	495	720
Size	8"	10"	12"	14"	16"	18"
C_v	1800	2600	4300	5500	7200	9400
Size	20"	24"				
C_v	12600	19000				

KECKLEY

TECHNICAL DATA
DIMENSIONS AND WEIGHTS

Style DD

Retainerless Wafer Body
Double Disc Check Valve, 150 lb.
Duplex (ASTM A 351, Grade CD4MCu)

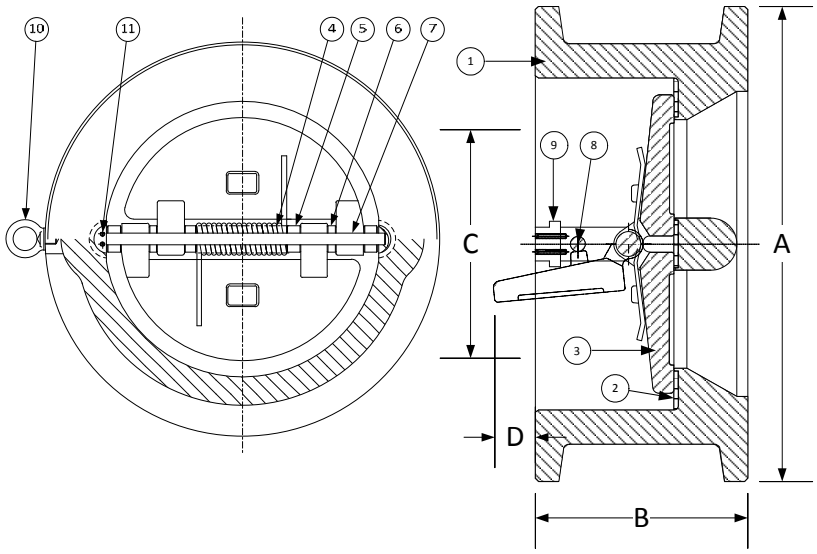

PARTS LIST		
ITEM	DESCRIPTION	MATERIAL
1	Body	Duplex (ASTM A 351, Grade CD4MCu)
2	Seat	Viton
3	Disc	Duplex (ASTM A 351, Grade CD4MCu)
4	Spring	Inconel X-750
5	Spring Plate	Stainless Steel (ASTM A 182, Grade F-316)
6	Thrust Washer	Stainless Steel (ASTM A 182, Grade F-316)
7	Hinge Pin	Stainless Steel (ASTM A 182, Grade F-316)
8	Stop Pin	Stainless Steel (ASTM A 182, Grade F-316)
9	Locating Piece	Stainless Steel (ASTM A 182, Grade F-316)
10	Lifting Lug	Carbon Steel
11	Screw	Stainless Steel (316)

Above "Standard" Product Number – **DD2R-DP-DP4IX**
Other Options - Reference C2 for available materials.

SIZE		DIMENSIONS								WEIGHTS	
		A		B		C*		D			
in	mm	in	mm	in	mm	in	mm	in	mm	lbs	kgs
2	50	4-1/8	105	2-3/8	60	1-15/16	49	-	-	6	3
2-1/2	65	4-7/8	124	2-5/8	67	2-11/32	60	-	-	10	5
3	80	5-3/8	137	2-7/8	73	2-29/32	74	1/4	6	13	6
4	100	6-7/8	175	2-7/8	73	3-53/64	97	5/8	16	17	8
5	125	7-3/4	197	3-3/8	86	4-13/16	122	7/8	22	27	12
6	150	8-3/4	222	3-7/8	98	5-49/64	146	1-3/8	35	35	16
8	200	11	279	5	127	7-5/8	194	2-1/8	54	70	32
10	250	13-3/8	340	5-3/4	146	9-9/16	243	2-3/4	70	106	48
12	300	16-1/8	410	7-1/8	181	11-3/8	289	3-1/4	83	172	78
14	350	17-3/4	451	7-1/4	184	12-1/2	318	3-1/4	83	200	91
16	400	20-1/4	514	7-1/2	191	15	381	4-7/16	113	275	125
18	450	21-5/8	549	8	203	16-7/8	429	5-3/8	137	315	143
20	500	23-7/8	606	8-5/8	219	18-13/16	478	6-5/16	160	435	197
24	600	28-1/4	718	8-3/4	222	22-5/8	575	8-1/4	210	620	281
30	750	34-3/4	883	13	330	29-1/4	743	9	229	1230	558
36	900	41-1/4	1048	15-1/4	387	35	889	11-15/16	303	2017	915
42	1050	48	1219	17	432	41	1041	15	381	2800	1270
48	1200	54-1/2	1384	20-5/8	524	47	1194	16-3/4	425	3920	1778

*Minimum companion flange bore.

Sizes 30" and larger fit **Series A** flanges.

Seat Material	Operating Temperature**	
	°F	°C
Buna-N	-20 to 250	-29 to 121
Viton	-20 to 400	-29 to 204
EPDM	-40 to 300	-40 to 149

**Subject to limitations of body material.

Applicable Standards
• Design ASME B16.5
• Design ASME B16.34
• Testing API 598
• Conforms to API 594 & 6D
• MSS SP – 6
• MSS SP – 25
• MSS SP – 55

FLOW COEFFICIENTS

Size	2"	2½"	3"	4"	5"	6"
C_v	48	98	170	290	495	720
Size	**8"**	**10"**	**12"**	**14"**	**16"**	**18"**
C_v	1800	2600	4300	5500	7200	9400
Size	**20"**	**24"**	**30"**	**36"**	**42"**	**48"**
C_v	12600	19000	37500	60000	89000	124000

KECKLEY COMPANY • 3400 Cleveland Street • Skokie, Illinois 60076 1-800-KECKLEY

KECKLEY

TECHNICAL DATA
DIMENSIONS AND WEIGHTS

Style DD

Retainerless Wafer Body
Double Disc Check Valve, 300 lb.
Duplex (ASTM A 351, Grade CD4MCu)

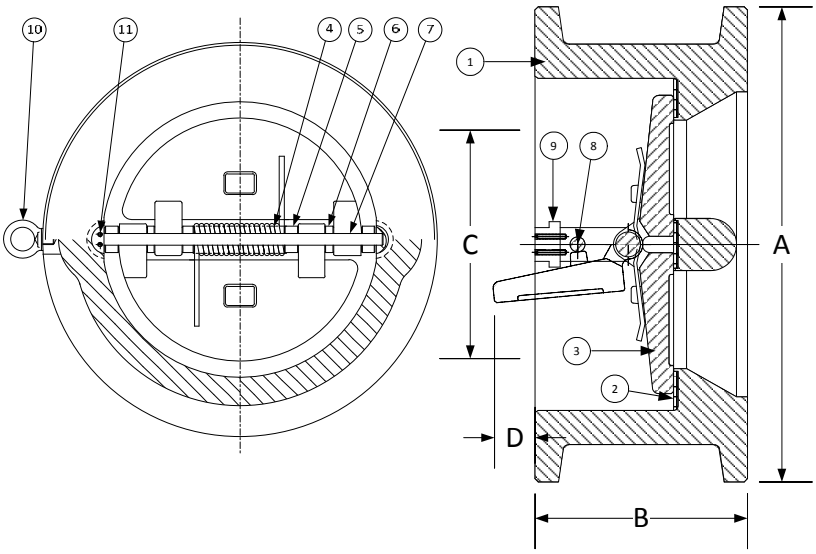

PARTS LIST		
ITEM	DESCRIPTION	MATERIAL
1	Body	Duplex (ASTM A 351, Grade CD4MCu)
2	Seat	Viton O-Ring
3	Disc	Duplex (ASTM A 351, Grade CD4MCu)
4	Spring	Inconel X-750
5	Spring Plate	Stainless Steel (ASTM A 182, Grade F-316)
6	Thrust Washer	Stainless Steel (ASTM A 182, Grade F-316)
7	Hinge Pin	Stainless Steel (ASTM A 182, Grade F-316)
8	Stop Pin	Stainless Steel (ASTM A 182, Grade F-316)
9	Locating Piece	Stainless Steel (ASTM A 182, Grade F-316)
10	Lifting Lug	Carbon Steel
11	Screw	Stainless Steel (316)

Above "Standard" Product Number – **DD4R-DP-DP4IX**
Other Options - Reference C2 for available materials.

SIZE		DIMENSIONS								WEIGHTS	
		A		B		C*		D			
in	mm	in	mm	in	mm	in	mm	in	mm	lbs	kgs
2	50	4-3/8	111	2-3/8	60	1-15/16	49	-	-	7	3
2-1/2	65	5-1/8	130	2-5/8	67	2-11/32	60	-	-	11	5
3	80	5-7/8	149	2-7/8	73	2-29/32	74	1/4	6	15	7
4	100	7-1/8	181	2-7/8	73	3-53-64	97	5/8	16	18	8
5	125	8-1/2	216	3-3/8	86	4-13/16	122	7/8	22	35	16
6	150	9-7/8	251	3-7/8	98	5-49/64	146	1-3/8	35	45	20
8	200	12-1/8	308	5	127	7-5/8	194	2-1/8	54	82	37
10	250	14-1/4	362	5-3/4	146	9-9/16	243	2-3/4	70	125	57
12	300	16-5/8	422	7-1/8	181	11-3/8	289	3-1/4	83	200	91
14	350	19-1/8	486	8-3/4	222	12-1/2	318	3-3/16	81	325	147
16	400	21-1/4	540	9-1/8	232	14-5/16	364	4-1/8	105	415	188
18	450	23-1/2	597	10-3/8	264	16-7/8	429	4-13/16	122	555	252
20	500	25-3/4	654	11-1/2	292	17-15/16	456	5-5/8	143	725	329
24	600	30-1/2	775	12-1/2	318	21-9/16	548	7-1/16	179	1100	499
30	750	37-1/2	953	14-1/2	3968	28-3/4	730	9-1/16	230	2050	930
36	900	44	1118	19	483	35	889	11-3/16	284	3573	1621
42	1050	45-7/8	1289	22-3/8	568	41	1041	14-3/4	375	4723	2147
48	1200	52-1/8	1492	24-3/4	629	47	1194	16-1/2	419	6090	2768

*Minimum companion flange bore.

Sizes 30" and larger fit **Series A** flanges.

Seat Material	Operating Temperature**	
	°F	°C
Buna-N	-20 to 250	-29 to 121
Viton	-20 to 400	-29 to 204
EPDM	-40 to 300	-40 to 149

**Subject to limitations of body material.

Applicable Standards
• Design ASME B16.5
• Design ASME B16.34
• Testing API 598
• Conforms to API 594 & 6D
• MSS SP – 6
• MSS SP – 25
• MSS SP – 55

FLOW COEFFICIENTS

Size	2"	2½"	3"	4"	5"	6"
C_v	48	98	170	290	495	720
Size	**8"**	**10"**	**12"**	**14"**	**16"**	**18"**
C_v	1800	2600	4300	5500	7200	9400
Size	**20"**	**24"**	**30"**	**36"**	**42"**	**48"**
C_v	12600	19000	37500	60000	89000	124000

KECKLEY

TECHNICAL DATA
DIMENSIONS AND WEIGHTS

Style DD

Retainerless Wafer Body
Double Disc Check Valve, 600 lb.
Duplex (ASTM A 351, Grade CD4MCu)

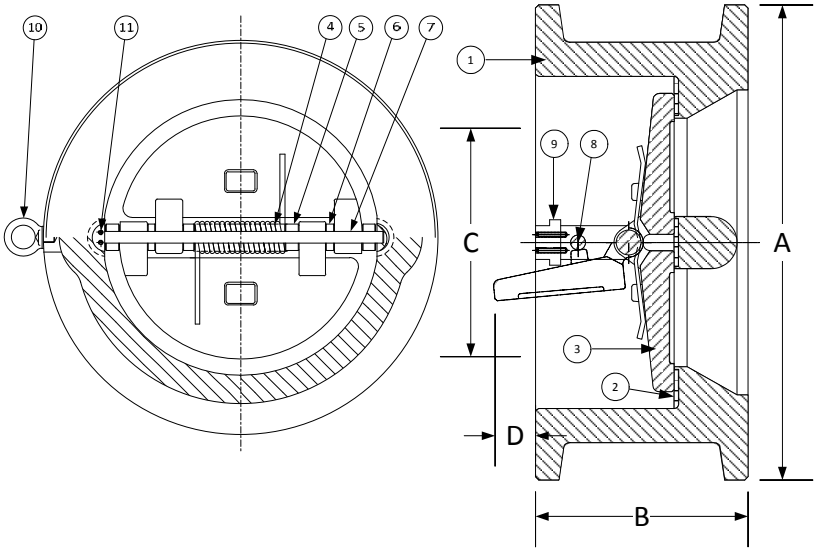

PARTS LIST		
ITEM	DESCRIPTION	MATERIAL
1	Body	Duplex (ASTM A 351, Grade CD4MCu)
2	Seat	Viton O-Ring
3	Disc	Duplex (ASTM A 351, Grade CD4MCu)
4	Spring	Inconel X-750
5	Spring Plate	Stainless Steel (ASTM A 182, Grade F-316)
6	Thrust Washer	Stainless Steel (ASTM A 182, Grade F-316)
7	Hinge Pin	Stainless Steel (ASTM A 182, Grade F-316)
8	Stop Pin	Stainless Steel (ASTM A 182, Grade F-316)
9	Locating Piece	Stainless Steel (ASTM A 182, Grade F-316)
10	Lifting Lug	Carbon Steel
11	Screw	Stainless Steel (316)

Above "Standard" Product Number – **DD5R-DP-DP4IX**
Other Options - Reference C2 for available materials.

SIZE		DIMENSIONS								WEIGHTS	
		A		B		C*		D			
in	mm	in	mm	in	mm	in	mm	in	mm	lbs	kgs
2	50	4-3/8	111	2-3/8	60	1-15/16	49	-	-	7	3
2-1/2	65	5-1/8	130	2-5/8	67	2-11/32	60	1/8	3	11	5
3	80	5-7/8	149	2-7/8	73	2-29/32	74	1/4	6	15	7
4	100	7-5/8	194	3-1/8	79	3-53/64	97	7/8	22	26	12
5	125	9-1/2	241	4-1/8	105	4-13/16	122	1	25	50	23
6	150	10-1/2	267	5-3/8	136	5-49/64	146	1-7/16	36	80	36
8	200	12-5/8	321	6-1/2	165	7-5/8	194	2	51	135	61
10	250	15-3/4	400	8-3/8	213	9-9/16	243	2-9/32	58	238	108
12	300	18	457	9	229	11-3/8	289	3-15/32	88	333	151
14	350	19-3/8	492	10-3/4	273	12-1/2	318	2-3/4	70	455	206
16	400	22-1/4	565	12	305	14-5/16	364	4-5/16	110	640	290
18	450	24-1/8	613	14-1/4	362	16-1/8	410	3-11/16	94	890	404
20	500	26-7/8	386	14-1/2	368	17-15/16	456	5-5/16	135	1120	508
24	600	31-1/8	791	17-1/4	438	21-9/16	548	6-9/16	167	2040	925
30	750	38-1/4	972	19-7/8	505	28-3/4	730	9-9/16	243	3375	1531
36	900	44-1/2	1130	25	635	33-3/4	857	11-15/16	303	6300	2858
42	1050	48	1219	27-5/8	702	39-1/2	1003	14-1/4	362	8447	3832

*Minimum companion flange bore.

Sizes 30" and larger fit **Series A** flanges.

Seat Material	Operating Temperature**	
	°F	°C
Buna-N	-20 to 250	-29 to 121
Viton	-20 to 400	-29 to 204
EPDM	-40 to 300	-40 to 149

**Subject to limitations of body material.

Applicable Standards
• Design ASME B16.5
• Design ASME B16.34
• Testing API 598
• Conforms to API 594 & 6D
• MSS SP – 6
• MSS SP – 25
• MSS SP – 55

FLOW COEFFICIENTS

Size	2"	2½"	3"	4"	5"	6"
C_v	48	98	170	290	495	720
Size	8"	10"	12"	14"	16"	18"
C_v	1800	2600	4300	5500	7200	9400
Size	20"	24"	30"	36"	42"	
C_v	12600	19000	37500	60000	89000	

KECKLEY COMPANY • 3400 Cleveland Street • Skokie, Illinois 60076 1-800-KECKLEY

KECKLEY

TECHNICAL DATA
DIMENSIONS AND WEIGHTS

Style DD

Retainerless Wafer Body
Double Disc Check Valve, 900 lb.
Duplex (ASTM A 351, Grade CD4MCu)

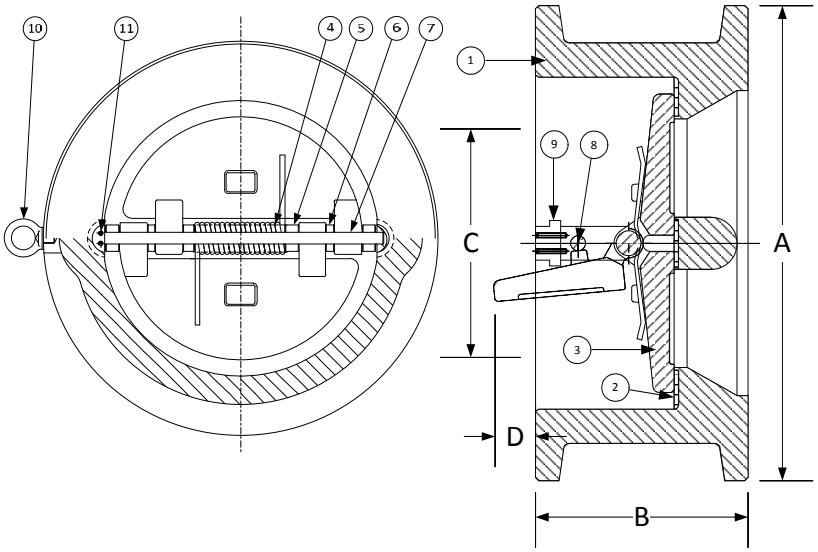

PARTS LIST		
ITEM	DESCRIPTION	MATERIAL
1	Body	Duplex (ASTM A 351,Grade CD4MCu)
2	Seat	Viton O-Ring
3	Disc	Duplex (ASTM A 351,Grade CD4MCu)
4	Spring	Inconel X-750
5	Spring Plate	Stainless Steel (ASTM A 182, Grade F-316)
6	Thrust Washer	Stainless Steel (ASTM A 182, Grade F-316)
7	Hinge Pin	Stainless Steel (ASTM A 182, Grade F-316)
8	Stop Pin	Stainless Steel (ASTM A 182, Grade F-316)
9	Locating Piece	Stainless Steel (ASTM A 182, Grade F-316)
10	Lifting Lug	Carbon Steel
11	Screw	Stainless Steel (316)

Above "Standard" Product Number – **DD6R-DP-DP4IX**
Other Options - Reference C2 for available materials.

SIZE		DIMENSIONS								WEIGHTS	
		A		B		C*		D			
in	mm	in	mm	in	mm	in	mm	in	mm	lbs	kgs
2	50	5-5/8	143	2-3/4	70	1-11/16	43	-	-	14	6
2-1/2	65	6-1/2	165	3-1/4	83	2-1/8	54	1/16	2	16	7
3	80	6-5/8	168	3-1/4	83	2-5/8	67	5/16	8	24	11
4	100	8-1/8	206	4	102	3-7/16	87	9/16	14	40	18
5	125	9-3/4	248	-	-	4-5/16	110	-	-	-	-
6	150	11-3/8	289	6-1/4	159	5-3/16	132	1-1/16	27	115	52
8	200	14-1/8	359	8-1/8	206	6-13/16	173	1-13/32	36	229	104
10	250	17-1/8	435	9-1/2	241	8-1/2	216	1-13/16	46	388	176
12	300	19-5/8	498	11-1/2	292	10-1/8	257	2-5/16	59	540	245
14	350	20-1/2	521	14	356	11-1/2	292	2	51	926	420
16	400	22-5/8	575	15-1/8	384	12-13/16	325	2-5/8	67	1152	523
18	450	25-1/8	638	17-3/4	451	14-7/16	367	2-9/16	65	1318	598
20	500	27-1/2	699	17-3/4	451	17-15/16	456	5-5/16	135	1426	647
24	600	33	838	19-1/2	495	21-1/2	546	5-5/8	143	2729	1238

*Minimum companion flange bore.

Seat Material	Operating Temperature**	
	°F	°C
Buna-N	-20 to 250	-29 to 121
Viton	-20 to 400	-29 to 204
EPDM	-40 to 300	-40 to 149

**Subject to limitations of body material.

Applicable Standards
• Design ASME B16.5
• Design ASME B16.34
• Testing API 598
• Conforms to API 594 & 6D
• MSS SP – 6
• MSS SP – 25
• MSS SP – 55

FLOW COEFFICIENTS

Size	2"	2½"	3"	4"	5"	6"
C_v	48	98	170	290	495	720
Size	8"	10"	12"	14"	16"	18"
C_v	1800	2600	4300	5500	7200	9400
Size	20"	24"				
C_v	12600	19000				

KECKLEY

TECHNICAL DATA
DIMENSIONS AND WEIGHTS

Style DD

Retainerless Wafer Body
Double Disc Check Valve, 1500 lb.
Duplex (ASTM A 351, Grade CD4MCu)

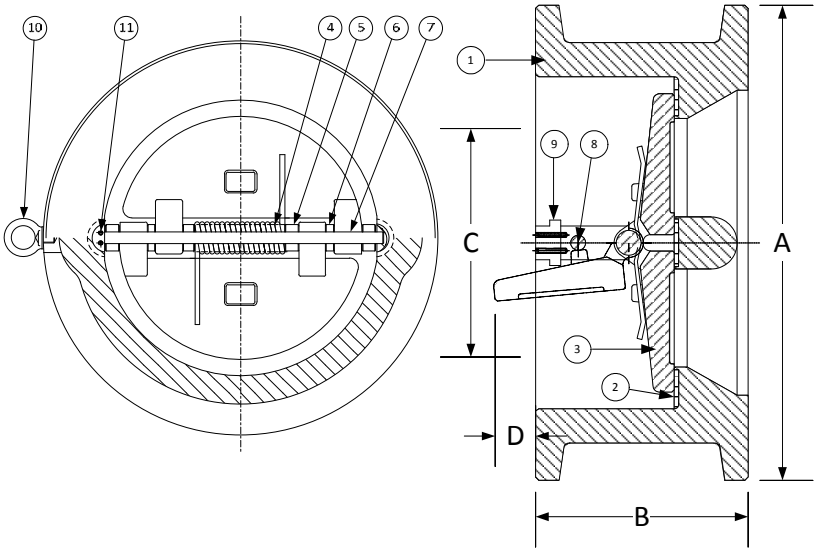

PARTS LIST		
ITEM	DESCRIPTION	MATERIAL
1	Body	Duplex (ASTM A 351, Grade CD4MCu)
2	Seat	Viton O-Ring
3	Disc	Duplex (ASTM A 351, Grade CD4MCu)
4	Spring	Inconel X-750
5	Spring plate	Stainless Steel (ASTM A 182, Grade F-316)
6	Thrust Washer	Stainless Steel (ASTM A 182, Grade F-316)
7	Hinge pin	Stainless Steel (ASTM A 182, Grade F-316)
8	Stop Pin	Stainless Steel (ASTM A 182, Grade F-316)
9	Locating piece	Stainless Steel (ASTM A 182, Grade F-316)
10	Lifting lug	Carbon Steel
11	Screw	Stainless Steel (316)

Above "Standard" Product Number – **DD7R-DP-DP4IX**
Other Options - Reference C2 for available materials.

SIZE		DIMENSIONS								WEIGHTS	
		A		B		C*		D			
in	mm	in	mm	in	mm	in	mm	in	mm	lbs	kgs
2	50	5-5/8	143	2-3/4	70	1-11/16	43	-	-	14	6
2-1/2	65	6-1/2	165	3-1/4	83	2-1/8	54	1/16	2	16	7
3	80	6-7/8	175	3-1/4	83	2-5/8	67	5/16	8	25	11
4	100	8-1/4	210	4	102	3-7/16	87	9-1/16	14	53	20
5	125	10	254	-	-	4-5/16	110	-	-	-	-
6	150	11-1/8	283	6-1/4	159	5-3/16	132	1-1/16	27	110	50
8	200	13-7/8	352	8-1/8	206	6-13/16	173	1-13/32	36	219	99
10	250	17-1/8	435	9-3/4	248	8-1/2	216	1-11/16	43	397	180
12	300	20-1/2	521	12	305	10-1/8	257	2-1/4	57	725	329
14	350	22-3/4	578	14	356	11-1/2	292	2	51	948	430
16	400	25-1/4	641	15-1/8	384	12-13/16	325	2-5/8	67	1380	627
18	450	27-3/4	705	18-7/16	468	13-3/4	349	2-11/16	68	1900	863
20	500	29-3/4	756	21	533	14-3/4	375	4	102	2750	1247
24	600	35-1/2	902	22	559	15-1/8	384	4-1/8	105	4409	2000

*Minimum companion flange bore.

Seat Material	Operating Temperature**	
	°F	°C
Buna-N	-20 to 250	-29 to 121
Viton	-20 to 400	-29 to 204
EPDM	-40 to 300	-40 to 149

**Subject to limitations of body material.

Applicable Standards
• Design ASME B16.5
• Design ASME B16.34
• Testing API 598
• Conforms to API 594 & 6D
• MSS SP – 6
• MSS SP – 25
• MSS SP – 55

FLOW COEFFICIENTS

Size	2"	2½"	3"	4"	5"	6"
C_v	48	98	170	290	495	720
Size	8"	10"	12"	14"	16"	18"
C_v	1800	2600	4300	5500	7200	9400
Size	20"	24"				
C_v	12600	19000				

KECKLEY COMPANY • 3400 Cleveland Street • Skokie, Illinois 60076 1-800-KECKLEY

KECKLEY

TECHNICAL DATA
DIMENSIONS AND WEIGHTS

Style DL

Retainerless Wafer Lug Body
Double Disc Check Valve, 150 lb.
Low Carbon Steel (ASTM A 352, Grade LCB)

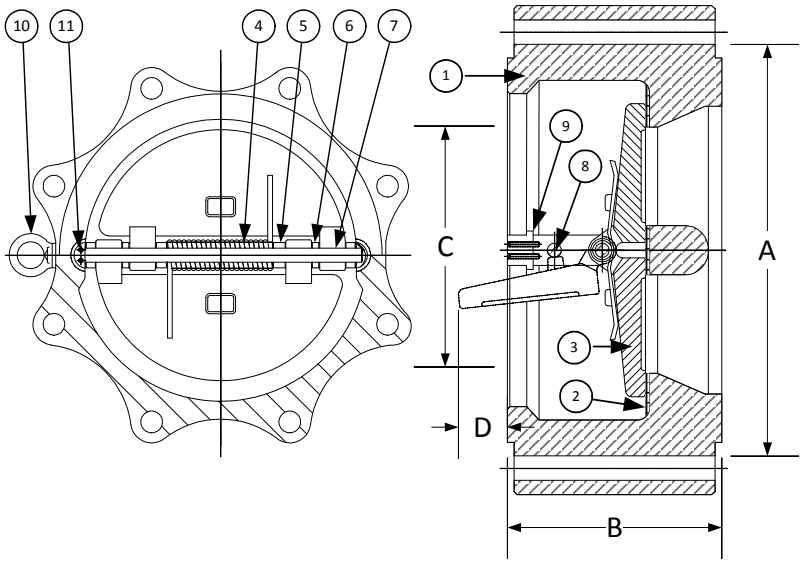

PARTS LIST		
ITEM	DESCRIPTION	MATERIAL
1	Body	Low Carbon Steel (ASTM A 352, Grade LCB)
2	Seat	Viton O-Ring
3	Disc	Low Carbon Steel (ASTM A 352, Grade LCB)
4	Spring	Inconel X-750
5	Spring Plate	Stainless Steel (ASTM A 182, Grade F-316)
6	Thrust Washer	Stainless Steel (ASTM A 182, Grade F-316)
7	Hinge Pin	Stainless Steel (ASTM A 182, Grade F-316)
8	Stop Pin	Stainless Steel (ASTM A 182, Grade F-316)
9	Locating Piece	Stainless Steel (ASTM A 182, Grade F-316)
10	Lifting Lug	Carbon Steel
11	Screw	Stainless Steel (316)

Above "Standard" Product Number – **DL2R-LC-LC4IX**
Other Options - Reference C2 for available materials.

SIZE		DIMENSIONS						WEIGHTS	
		A		B		C*			
in	mm	in	mm	in	mm	in	mm	lbs	kgs
2	50	4-1/8	105	2-3/8	60	1-15/16	49	18	8
2-1/2	65	4-7/8	124	2-5/8	67	2-11/32	60	22	10
3	80	5-3/8	137	2-7/8	73	2-29/32	74	30	14
4	100	6-7/8	175	2-7/8	73	3-53/64	97	44	20
5	125	7-3/4	197	3-3/8	86	4-13/16	122	51	23
6	150	8-3/4	222	3-7/8	98	5-49/64	146	84	38
8	200	11	279	5	127	7-1/2	191	91	41
10	250	13-3/8	340	5-3/4	146	9-7/16	240	156	71
12	300	16-1/8	410	7-1/8	181	11-1/4	286	252	114
14	350	17-3/4	441	7-1/4	184	12-5/8	321	291	132
16	400	20-1/4	514	7-1/2	191	14-11/16	373	464	210
18	450	21-5/8	549	8	203	16-9/16	421	431	195
20	500	23-7/8	606	8-5/8	219	18-7/16	468	501	227
24	600	28-1/4	718	8-3/4	222	21-5/8	549	682	309
30	750	34-3/4	883	12	305	28-7/16	722	1321	599
36	900	41-1/4	1048	14-1/2	368	34-3/8	873	1898	861
42	1050	48	1219	17	432	40-9/16	1030	3236	1468
48	1200	54-1/2	1384	20-5/8	524	44-3/16	1122	4899	2222

*Minimum companion flange bore.

Available with thru-hole bolting or threaded bolt holes.

Seat Material	Operating Temperature**	
	°F	°C
Buna-N	-20 to 250	-29 to 121
Viton	-20 to 400	-29 to 204
EPDM	-40 to 300	-40 to 149

**Subject to limitations of body material.

Applicable Standards
• Design ASME B16.5
• Design ASME B16.34
• Testing API 598
• Conforms to API 594 & 6D
• MSS SP – 6
• MSS SP – 25
• MSS SP – 55

FLOW COEFFICIENTS

Size	2"	2-1/2"	3"	4"	5"	6"
C_v	48	98	170	290	495	720
Size	**8"**	**10"**	**12"**	**14"**	**16"**	**18"**
C_v	1800	2600	4300	5500	7200	9400
Size	**20"**	**24"**	**30"**	**36"**	**42"**	**48"**
C_v	12600	19000	37500	60000	89000	124000

KECKLEY

TECHNICAL DATA
DIMENSIONS AND WEIGHTS

Style DL

Retainerless Wafer Lug Body
Double Disc Check Valve, 300 lb.
Low Carbon Steel (ASTM A 352, Grade LCB)

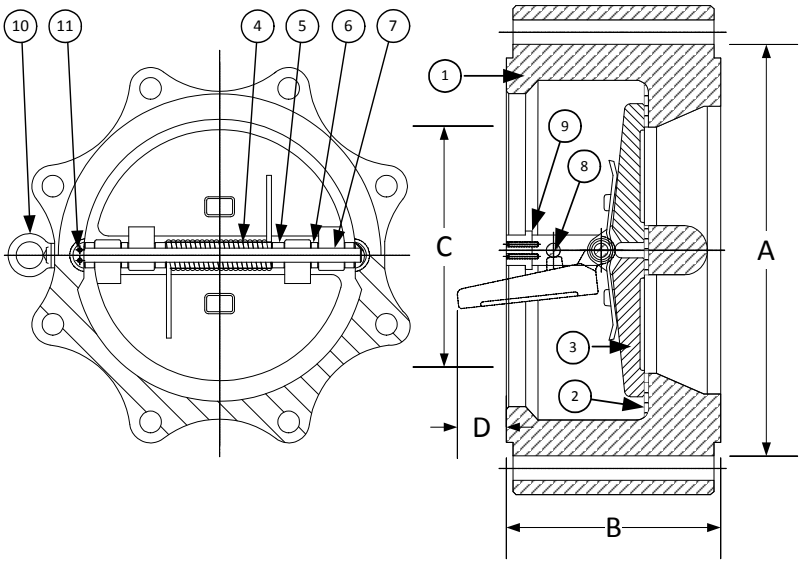

PARTS LIST		
ITEM	DESCRIPTION	MATERIAL
1	Body	Low Carbon Steel (ASTM A 352, Grade LCB)
2	Seat	Viton O-Ring
3	Disc	Low Carbon Steel (ASTM A 352, Grade LCB)
4	Spring	Inconel X-750
5	Spring Plate	Stainless Steel (ASTM A 182, Grade F-316)
6	Thrust Washer	Stainless Steel (ASTM A 182, Grade F-316)
7	Hinge Pin	Stainless Steel (ASTM A 182, Grade F-316)
8	Stop Pin	Stainless Steel (ASTM A 182, Grade F-316)
9	Locating Piece	Stainless Steel (ASTM A 182, Grade F-316)
10	Lifting Lug	Carbon Steel
11	Screw	Stainless Steel (316)

Above "Standard" Product Number – **DL4R-LC-LC4IX**
Other Options - Reference C2 for available materials.

SIZE		DIMENSIONS						WEIGHTS	
		A		B		C*			
in	mm	in	mm	in	mm	in	mm	lbs	kgs
2	50	4-3/8	111	2-3/8	60	1-15/16	49	18	8
2-1/2	65	5-1/8	130	2-5/8	67	2-11/32	60	22	10
3	80	5-7/8	149	2-7/8	73	2-29/32	74	30	14
4	100	7-1/8	181	2-7/8	73	3-53/64	97	44	20
5	125	8-1/2	216	3-3/8	86	4-13/16	122	51	23
6	150	9-7/8	251	3-7/8	98	5-49/64	146	84	38
8	200	12-1/8	308	5	127	7-5/8	194	163	74
10	250	14-1/4	362	5-3/4	146	9-9/16	243	270	123
12	300	16-5/8	422	7-1/8	181	11-1/4	286	361	164
14	350	19-1/8	486	8-3/4	222	12-7/16	316	543	246
16	400	21-1/4	540	9-1/8	232	14-1/2	368	792	359
18	450	23-1/2	597	10-3/8	264	16-3/8	416	790	358
20	500	25-3/4	654	11-1/2	292	18-1/16	459	780	354
24	600	30-1/2	775	12-1/2	318	20-11/16	525	1011	459
30	750	37-1/2	953	14-1/2	368	27-5/8	702	1974	895
36	900	44	1118	19	483	33-1/2	851	3926	1781
42	1050	45-7/8	1165	22-3/8	568	39-1/2	1003	4830	2191
48	1200	52-1/2	1334	24-3/4	629	42-1/4	1073	6653	3018

*Minimum companion flange bore.

Available with thru-hole bolting or threaded bolt holes.

Seat Material	Operating Temperature**	
	°F	°C
Buna-N	-20 to 250	-29 to 121
Viton	-20 to 400	-29 to 204
EPDM	-40 to 300	-40 to 149

**Subject to limitations of body material.

Applicable Standards
• Design ASME B16.5
• Design ASME B16.34
• Testing API 598
• Conforms to API 594 & 6D
• MSS SP – 6
• MSS SP – 25
• MSS SP – 55

FLOW COEFFICIENTS

Size	2"	2-1/2"	3"	4"	5"	6"
C_v	48	98	170	290	495	720
Size	**8"**	**10"**	**12"**	**14"**	**16"**	**18"**
C_v	1800	2600	4300	5500	7200	9400
Size	**20"**	**24"**	**30"**	**36"**	**42"**	**48"**
C_v	12600	19000	37500	60000	89000	124000

KECKLEY COMPANY • 3400 Cleveland Street • Skokie, Illinois 60076 1-800-KECKLEY

KECKLEY

TECHNICAL DATA
DIMENSIONS AND WEIGHTS

Style DL

Retainerless Wafer Lug Body
Double Disc Check Valve, 600 lb.
Low Carbon Steel (ASTM A 352, Grade LCB)

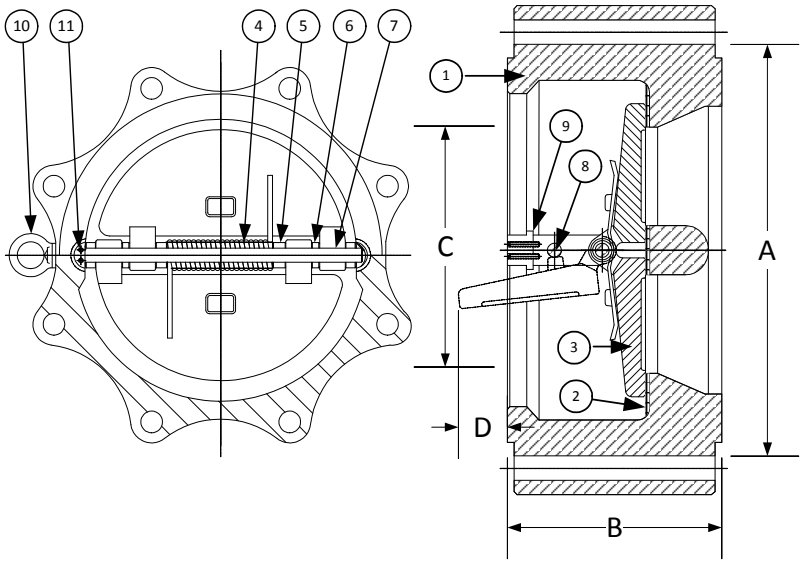

PARTS LIST		
ITEM	DESCRIPTION	MATERIAL
1	Body	Low Carbon Steel (ASTM A 352, Grade LCB)
2	Seat	Viton O-Ring
3	Disc	Low Carbon Steel (ASTM A 352, Grade LCB)
4	Spring	Inconel X-750
5	Spring Plate	Stainless Steel (ASTM A 182, Grade F-316)
6	Thrust Washer	Stainless Steel (ASTM A 182, Grade F-316)
7	Hinge Pin	Stainless Steel (ASTM A 182, Grade F-316)
8	Stop Pin	Stainless Steel (ASTM A 182, Grade F-316)
9	Locating Piece	Stainless Steel (ASTM A 182, Grade F-316)
10	Lifting Lug	Carbon Steel
11	Screw	Stainless Steel (316)

Above "Standard" Product Number – **DL5R-LC-LC4IX**
Other Options - Reference C2 for available materials.

SIZE		DIMENSIONS						WEIGHTS	
		A		B		C*			
in	mm	in	mm	in	mm	in	mm	lbs	kgs
2	50	4-3/8	111	2-3/8	60	1-3/16	30	18	8
2-1/2	65	5-1/8	130	2-5/8	67	2-1/8	54	27	12
3	80	5-7/8	149	2-7/8	73	2-3/16	56	27	12
4	100	7-5/8	194	3-1/8	79	3-5/16	84	51	23
5	125	9-1/2	241	4-1/8	105	4-1/2	114	97	44
6	150	10-1/2	267	5-3/8	137	4-3/4	121	151	68
8	200	12-5/8	321	6-1/2	165	6-25/32	172	261	118
10	250	15-3/4	400	8-3/8	213	8-1/2	216	460	209
12	300	18	457	9	229	10-9/16	268	587	266
14	350	19-3/8	492	10-3/4	273	11-15/16	303	817	371
16	400	22-1/4	565	12	305	13-1/2	343	1058	480
18	450	24-1/8	613	14-1/4	362	13-3/4	349	1011	459
20	500	26-7/8	683	14-1/2	368	16-15/16	430	1279	580
24	600	31-1/8	791	17-1/4	438	20-1/2	521	1851	840
30	750	38-1/4	972	19-7/8	505	26-1/2	673	2987	1355
36	900	44	1118	25	635	30-3/8	772	5364	2433
42	1050	48	1219	27-5/8	702	37-7/16	951	7048	3197

*Minimum companion flange bore.

Available with thru-hole bolting or threaded bolt holes.

Seat Material	Operating Temperature**	
	°F	°C
Buna-N	-20 to 250	-29 to 121
Viton	-20 to 400	-29 to 204
EPDM	-40 to 300	-40 to 149

**Subject to limitations of body material.

Applicable Standards
• Design ASME B16.5
• Design ASME B16.34
• Testing API 598
• Conforms to API 594 & 6D
• MSS SP – 6
• MSS SP – 25
• MSS SP – 55

FLOW COEFFICIENTS

Size	2"	2-1/2"	3"	4"	5"	6"
C_v	48	98	170	290	495	720
Size	8"	10"	12"	14"	16"	18"
C_v	1800	2600	4300	5500	7200	9400
Size	20"	24"	30"	36"	42"	
C_v	12600	19000	37500	60000	89000	

KECKLEY

TECHNICAL DATA
DIMENSIONS AND WEIGHTS

Style DL

Retainerless Wafer Lug Body
Double Disc Check Valve, 900 lb.
Low Carbon Steel (ASTM A 352, Grade LCB)

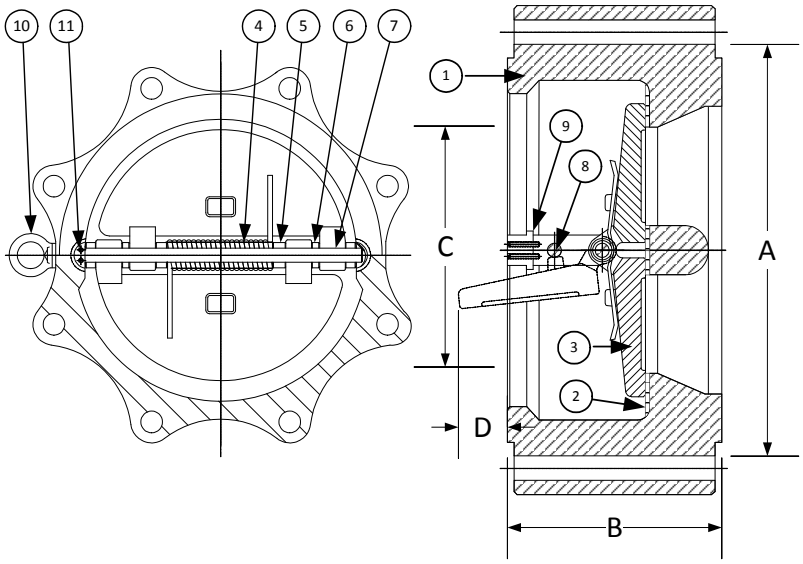

PARTS LIST		
ITEM	DESCRIPTION	MATERIAL
1	Body	Low Carbon Steel (ASTM A 352, Grade LCB)
2	Seat	Viton O-Ring
3	Disc	Low Carbon Steel (ASTM A 352, Grade LCB)
4	Spring	Inconel X-750
5	Spring Plate	Stainless Steel (ASTM A 182, Grade F-316)
6	Thrust Washer	Stainless Steel (ASTM A 182, Grade F-316)
7	Hinge Pin	Stainless Steel (ASTM A 182, Grade F-316)
8	Stop Pin	Stainless Steel (ASTM A 182, Grade F-316)
9	Locating Piece	Stainless Steel (ASTM A 182, Grade F-316)
10	Lifting Lug	Carbon Steel
11	Screw	Stainless Steel (316)

Above "Standard" Product Number – **DL6R-LC-LC4IX**
Other Options - Reference C2 for available materials.

SIZE		DIMENSIONS						WEIGHTS	
		A		B		C*			
in	mm	in	mm	in	mm	in	mm	lbs	kgs
2	50	5-5/8	143	2-3/4	70	-	-	26	12
2-1/2	65	6-1/2	165	3-1/4	83	2	51	40	18
3	80	6-5/8	168	3-1/4	83	2-1/8	54	44	20
4	100	8-1/8	206	4	102	3-1/16	78	68	31
6	150	11-3/8	289	6-1/4	159	3-5/8	92	240	109
8	200	14-1/8	359	8-1/8	206	6-1/2	165	443	201
10	250	17-1/8	435	9-1/2	241	8-3/16	208	661	300
12	300	19-5/8	498	11-1/2	292	9-3/4	248	981	445
14	350	20-1/2	521	14	356	8-15/16	227	1241	563
16	400	22-5/8	575	15-1/8	384	11-7/32	285	2074	941
18	450	25-1/8	638	17-3/4	451	13-15/16	354	1418	643
20	500	27-1/2	699	17-3/4	451	17-1/16	433	1892	858
24	600	33	838	19-1/2	495	20-15/32	520	2786	1264

*Minimum companion flange bore.

Available with thru-hole bolting or threaded bolt holes.

Seat Material	Operating Temperature**	
	°F	°C
Buna-N	-20 to 250	-29 to 121
Viton	-20 to 400	-29 to 204
EPDM	-40 to 300	-40 to 149

**Subject to limitations of body material.

Applicable Standards
• Design ASME B16.5
• Design ASME B16.34
• Testing API 598
• Conforms to API 594 & 6D
• MSS SP – 6
• MSS SP – 25
• MSS SP – 55

FLOW COEFFICIENTS

Size	2"	2-1/2"	3"	4"	5"	6"
C_v	48	98	170	290	495	720
Size	8"	10"	12"	14"	16"	18"
C_v	1800	2600	4300	5500	7200	9400
Size	20"	24"				
C_v	12600	19000				

KECKLEY

TECHNICAL DATA
DIMENSIONS AND WEIGHTS

Style DL

Retainerless Wafer Lug Body
Double Disc Check Valve, 1500 lb.
Low Carbon Steel (ASTM A 352, Grade LCB)

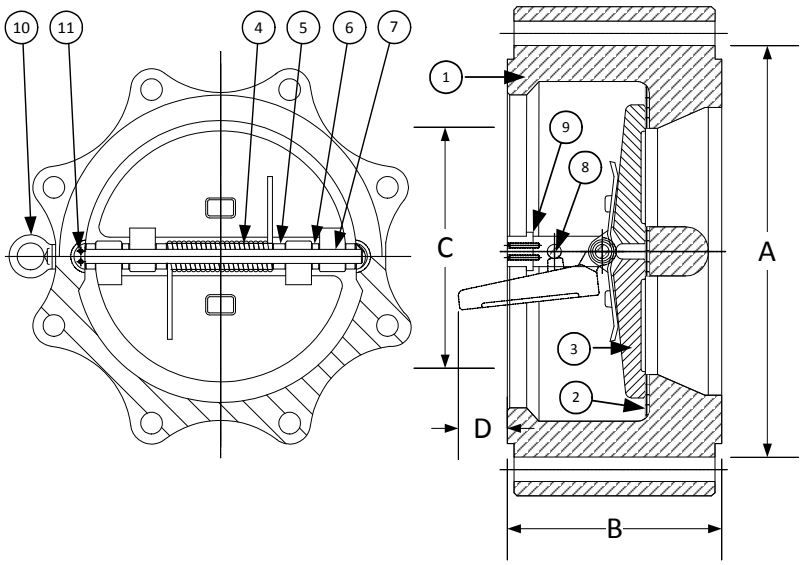

PARTS LIST		
ITEM	DESCRIPTION	MATERIAL
1	Body	Low Carbon Steel (ASTM A 352, Grade LCB)
2	Seat	Buna-N O-Ring
3	Disc	Low Carbon Steel (ASTM A 352, Grade LCB)
4	Spring	Inconel X-750
5	Spring Plate	Stainless Steel (ASTM A 182, Grade F-316)
6	Thrust Washer	Stainless Steel (ASTM A 182, Grade F-316)
7	Hinge Pin	Stainless Steel (ASTM A 182, Grade F-316)
8	Stop Pin	Stainless Steel (ASTM A 182, Grade F-316)
9	Locating Piece	Stainless Steel (ASTM A 182, Grade F-316)
10	Lifting Lug	Carbon Steel
11	Screw	Stainless Steel (316)

Above "Standard" Product Number – **DL7R-LC-LC1IX**
Other Options - Reference C2 for available materials.

SIZE		DIMENSIONS						WEIGHTS	
		A		B		C*			
in	mm	in	mm	in	mm	in	mm	lbs	kgs
2	50	5-5/8	143	2-3/4	70	1-11/16	43	37	17
3	80	6-7/8	175	3-1/4	83	2-5/8	67	70	32
4	100	8-1/4	210	4	102	3-7/16	87	112	51
6	150	11-1/8	283	6-1/4	159	5-3/16	132	262	119
8	200	13-7/8	352	8-1/8	206	6-13/16	173	488	221
10	250	17-1/8	435	9-3/4	248	8-1/2	216	917	416
12	300	20-1/2	521	12	305	10-1/8	257	1425	646
14	350	22-3/4	578	14	356	11-1/2	292	245	928
16	400	25-1/4	641	15-1/8	384	12-13/16	325	2600	1179
18	450	27-3/4	705	18-7/16	468	13-3/4	349	3883	1761
20	500	29-3/4	756	21	533	14-3/4	348	5700	2580
24	600	35-1/2	902	22	559	15-1/8	384	7150	3236

*Minimum companion flange bore.
Available with thru-hole bolting or threaded bolt holes.

Sizes 30" and larger fit **Series A** flanges.

Seat Material	Operating Temperature**	
	°F	°C
Buna-N	-20 to 250	-29 to 121
Viton	-20 to 400	-29 to 204
EPDM	-40 to 300	-40 to 149

**Subject to limitations of body material.

Applicable Standards
• Design ASME B16.5
• Design ASME B16.34
• Testing API 598
• Conforms to API 594 & 6D
• MSS SP – 6
• MSS SP – 25
• MSS SP – 55

FLOW COEFFICIENTS

Size	2"	2½"	3"	4"	5"	6"
C_v	48	98	170	290	495	720
Size	**8"**	**10"**	**12"**	**14"**	**16"**	**18"**
C_v	1800	2600	4300	5500	7200	9400
Size	**20"**	**24"**				
C_v	12600	19000				

KECKLEY

TECHNICAL DATA
DIMENSIONS AND WEIGHTS

Style DL

Retainerless Wafer Lug Body
Double Disc Check Valve, 150 lb.
Alloy 20 (ASTM A 351, Grade CN7M)

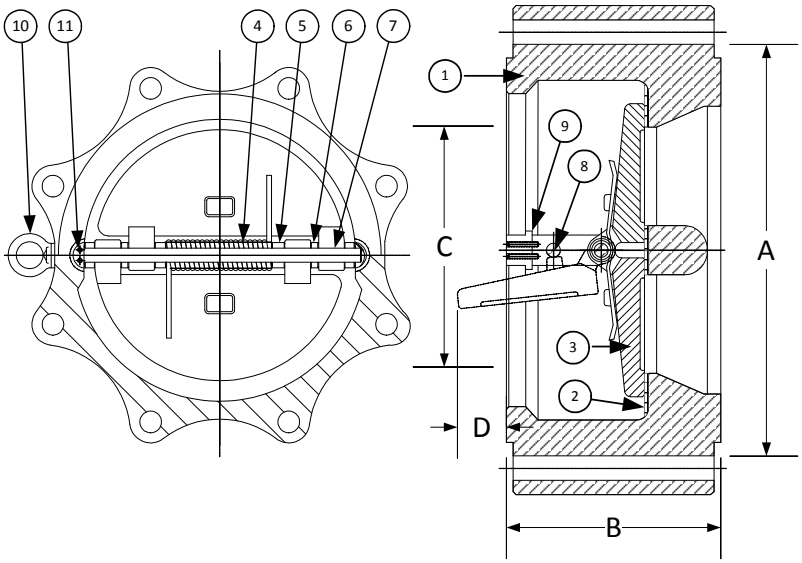

PARTS LIST		
ITEM	DESCRIPTION	MATERIAL
1	Body	Alloy 20 (ASTM A 351, Grade CN7M)
2	Seat	Viton O-Ring
3	Disc	Alloy 20 (ASTM A 351, Grade CN7M)
4	Spring	Inconel X-750
5	Spring Plate	Stainless Steel (ASTM A 182, Grade F-316)
6	Thrust Washer	Stainless Steel (ASTM A 182, Grade F-316)
7	Hinge Pin	Stainless Steel (ASTM A 182, Grade F-316)
8	Stop Pin	Stainless Steel (ASTM A 182, Grade F-316)
9	Locating Piece	Stainless Steel (ASTM A 182, Grade F-316)
10	Lifting Lug	Carbon Steel
11	Screw	Stainless Steel (316)

Above "Standard" Product Number – **DL2R-A2-A24IX**
Other Options - Reference C2 for available materials.

SIZE		DIMENSIONS						WEIGHTS	
		A		B		C*			
in	mm	in	mm	in	mm	in	mm	lbs	kgs
2	50	4-1/8	105	2-3/8	60	1-15/16	49	18	8
2-1/2	65	4-7/8	124	2-5/8	67	2-11/32	60	22	10
3	80	5-3/8	137	2-7/8	73	2-29/32	74	30	14
4	100	6-7/8	175	2-7/8	73	3-53/64	97	44	20
5	125	7-3/4	197	3-3/8	86	4-13/16	122	51	23
6	150	8-3/4	222	3-7/8	98	5-49/64	146	84	38
8	200	11	279	5	127	7-1/2	191	91	41
10	250	13-3/8	340	5-3/4	146	9-7/16	240	156	71
12	300	16-1/8	410	7-1/8	181	11-1/4	286	252	114
14	350	17-3/4	441	7-1/4	184	12-5/8	321	291	132
16	400	20-1/4	514	7-1/2	191	14-11/16	373	464	210
18	450	21-5/8	549	8	203	16-9/16	421	431	195
20	500	23-7/8	606	8-5/8	219	18-7/16	468	501	227
24	600	28-1/4	718	8-3/4	222	21-5/8	549	682	309
30	750	34-3/4	883	12	305	28-7/16	722	1321	599
36	900	41-1/4	1048	14-1/2	368	34-3/8	873	1898	861
42	1050	48	1219	17	432	40-9/16	1030	3236	1468
48	1200	54-1/2	1384	20-5/8	524	44-3/16	1122	4899	2222

*Minimum companion flange bore.

Available with thru-hole bolting or threaded bolt holes.

Seat Material	Operating Temperature**	
	°F	°C
Buna-N	-20 to 250	-29 to 121
Viton	-20 to 400	-29 to 204
EPDM	-40 to 300	-40 to 149

**Subject to limitations of body material.

Applicable Standards
• Design ASME B16.5
• Design ASME B16.34
• Testing API 598
• Conforms to API 594 & 6D
• MSS SP – 6
• MSS SP – 25
• MSS SP – 55

FLOW COEFFICIENTS

Size	2"	2-1/2"	3"	4"	5"	6"
C_v	48	98	170	290	495	720
Size	**8"**	**10"**	**12"**	**14"**	**16"**	**18"**
C_v	1800	2600	4300	5500	7200	9400
Size	**20"**	**24"**	**30"**	**36"**	**42"**	**48"**
C_v	12600	19000	37500	60000	89000	124000

KECKLEY COMPANY • 3400 Cleveland Street • Skokie, Illinois 60076 1-800-KECKLEY

KECKLEY

TECHNICAL DATA
DIMENSIONS AND WEIGHTS

Style DL

Retainerless Wafer Lug Body
Double Disc Check Valve, 300 lb.
Alloy 20 (ASTM A 351, Grade CN7M)

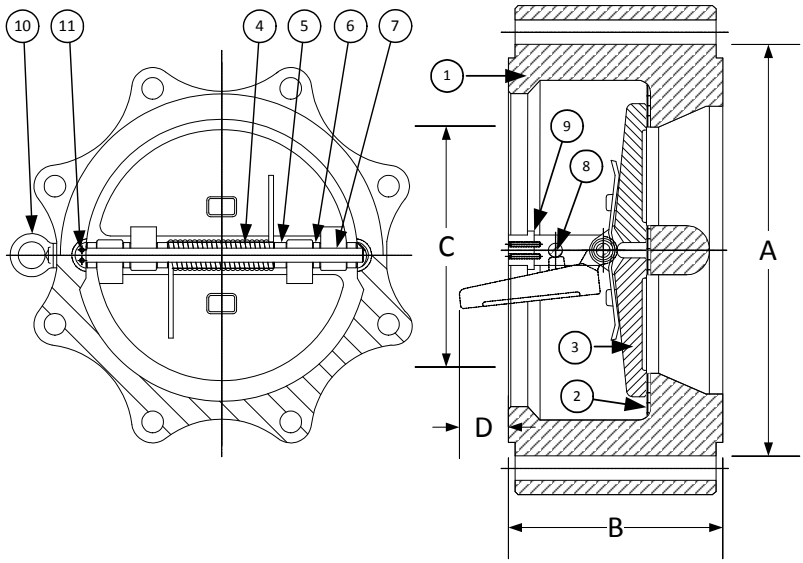

PARTS LIST		
ITEM	DESCRIPTION	MATERIAL
1	Body	Alloy 20 (ASTM A 351, Grade CN7M)
2	Seat	Viton O-Ring
3	Disc	Alloy 20 (ASTM A 351, Grade CN7M)
4	Spring	Inconel X-750
5	Spring Plate	Stainless Steel (ASTM A 182, Grade F-316)
6	Thrust Washer	Stainless Steel (ASTM A 182, Grade F-316)
7	Hinge Pin	Stainless Steel (ASTM A 182, Grade F-316)
8	Stop Pin	Stainless Steel (ASTM A 182, Grade F-316)
9	Locating Piece	Stainless Steel (ASTM A 182, Grade F-316)
10	Lifting Lug	Carbon Steel
11	Screw	Stainless Steel (316)

Above "Standard" Product Number – **DL4R-A2-A24IX**
Other Options - Reference C2 for available materials.

SIZE		DIMENSIONS						WEIGHTS	
		A		B		C*			
in	mm	in	mm	in	mm	in	mm	lbs	kgs
2	50	4-3/8	111	2-3/8	60	1-15/16	49	18	8
2-1/2	65	5-1/8	130	2-5/8	67	2-11/32	60	22	10
3	80	5-7/8	149	2-7/8	73	2-29/32	74	30	14
4	100	7-1/8	181	2-7/8	73	3-53/64	97	44	20
5	125	8-1/2	216	3-3/8	86	4-13/16	122	51	23
6	150	9-7/8	251	3-7/8	98	5-49/64	146	84	38
8	200	12-1/8	308	5	127	7-5/8	194	163	74
10	250	14-1/4	362	5-3/4	146	9-9/16	243	270	123
12	300	16-5/8	422	7-1/8	181	11-1/4	286	361	164
14	350	19-1/8	486	8-3/4	222	12-7/16	316	543	246
16	400	21-1/4	540	9-1/8	232	14-1/2	368	792	359
18	450	23-1/2	597	10-3/8	264	16-3/8	416	790	358
20	500	25-3/4	654	11-1/2	292	18-1/16	459	780	354
24	600	30-1/2	775	12-1/2	318	20-11/16	525	1011	459
30	750	37-1/2	953	14-1/2	368	27-5/8	702	1974	895
36	900	44	1118	19	483	33-1/2	851	3926	1781
42	1050	45-7/8	1165	22-3/8	568	39-1/2	1003	4830	2191
48	1200	52-1/2	1334	24-3/4	629	42-1/4	1073	6653	3018

*Minimum companion flange bore.

Available with thru-hole bolting or threaded bolt holes.

Seat Material	Operating Temperature**	
	°F	°C
Buna-N	-20 to 250	-29 to 121
Viton	-20 to 400	-29 to 204
EPDM	-40 to 300	-40 to 149

**Subject to limitations of body material.

Applicable Standards
• Design ASME B16.5
• Design ASME B16.34
• Testing API 598
• Conforms to API 594 & 6D
• MSS SP – 6
• MSS SP – 25
• MSS SP – 55

FLOW COEFFICIENTS

Size	2"	2-1/2"	3"	4"	5"	6"
C_v	48	98	170	290	495	720
Size	**8"**	**10"**	**12"**	**14"**	**16"**	**18"**
C_v	1800	2600	4300	5500	7200	9400
Size	**20"**	**24"**	**30"**	**36"**	**42"**	**48"**
C_v	12600	19000	37500	60000	89000	124000

KECKLEY

TECHNICAL DATA
DIMENSIONS AND WEIGHTS

Style DL

Retainerless Wafer Lug Body
Double Disc Check Valve, 600 lb.
Alloy 20 (ASTM A 351, Grade CN7M)

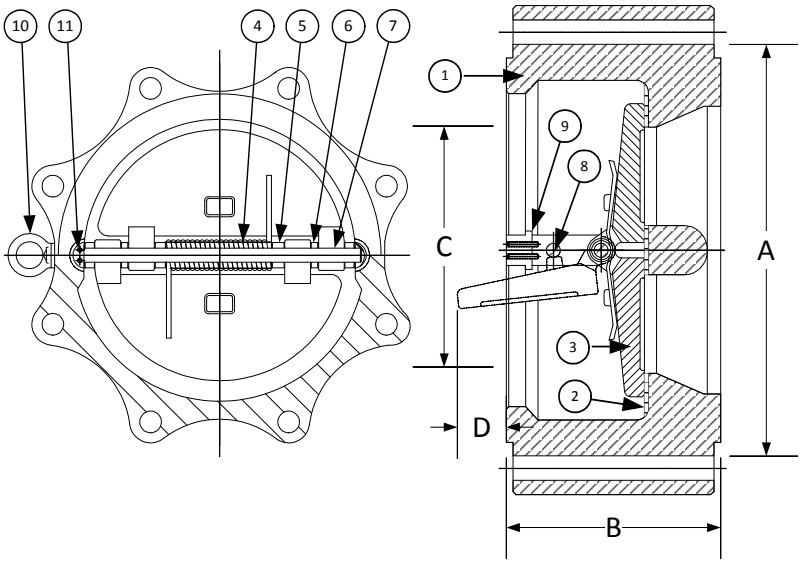

PARTS LIST		
ITEM	DESCRIPTION	MATERIAL
1	Body	Alloy 20 (ASTM A 351, Grade CN7M)
2	Seat	Viton O-Ring
3	Disc	Alloy 20 (ASTM A 351, Grade CN7M)
4	Spring	Inconel X-750
5	Spring Plate	Stainless Steel (ASTM A 182, Grade F-316)
6	Thrust Washer	Stainless Steel (ASTM A 182, Grade F-316)
7	Hinge Pin	Stainless Steel (ASTM A 182, Grade F-316)
8	Stop Pin	Stainless Steel (ASTM A 182, Grade F-316)
9	Locating Piece	Stainless Steel (ASTM A 182, Grade F-316)
10	Lifting Lug	Carbon Steel
11	Screw	Stainless Steel (316)

Above "Standard" Product Number – **DL5R-A2-A24IX**
Other Options - Reference C2 for available materials.

SIZE		DIMENSIONS						WEIGHTS	
		A		B		C*			
in	mm	in	mm	in	mm	in	mm	lbs	kgs
2	50	4-3/8	111	2-3/8	60	1-3/16	30	18	8
2-1/2	65	5-1/8	130	2-5/8	67	2-1/8	54	27	12
3	80	5-7/8	149	2-7/8	73	2-3/16	56	27	12
4	100	7-5/8	194	3-1/8	79	3-5/16	84	51	23
5	125	9-1/2	241	4-1/8	105	4-1/2	114	97	44
6	150	10-1/2	267	5-3/8	137	4-3/4	121	151	68
8	200	12-5/8	321	6-1/2	165	6-25/32	172	261	118
10	250	15-3/4	400	8-3/8	213	8-1/2	216	460	209
12	300	18	457	9	229	10-9/16	268	587	266
14	350	19-3/8	492	10-3/4	273	11-15/16	303	817	371
16	400	22-1/4	565	12	305	13-1/2	343	1058	480
18	450	24-1/8	613	14-1/4	362	13-3/4	349	1011	459
20	500	26-7/8	683	14-1/2	368	16-15/16	430	1279	580
24	600	31-1/8	791	17-1/4	438	20-1/2	521	1851	840
30	750	38-1/4	972	19-7/8	505	26-1/2	673	2987	1355
36	900	44	1118	25	635	30-3/8	772	5364	2433
42	1050	48	1219	27-5/8	702	37-7/16	951	7048	3197

*Minimum companion flange bore.

Available with thru-hole bolting or threaded bolt holes.

Seat Material	Operating Temperature**	
	°F	°C
Buna-N	-20 to 250	-29 to 121
Viton	-20 to 400	-29 to 204
EPDM	-40 to 300	-40 to 149

**Subject to limitations of body material.

Applicable Standards
• Design ASME B16.5
• Design ASME B16.34
• Testing API 598
• Conforms to API 594 & 6D
• MSS SP – 6
• MSS SP – 25
• MSS SP – 55

FLOW COEFFICIENTS

Size	2"	2-1/2"	3"	4"	5"	6"
C_v	48	98	170	290	495	720
Size	**8"**	**10"**	**12"**	**14"**	**16"**	**18"**
C_v	1800	2600	4300	5500	7200	9400
Size	**20"**	**24"**	**30"**	**36"**	**42"**	
C_v	12600	19000	37500	60000	89000	

KECKLEY COMPANY • 3400 Cleveland Street • Skokie, Illinois 60076 1-800-KECKLEY

KECKLEY

TECHNICAL DATA
DIMENSIONS AND WEIGHTS

Style DL

Retainerless Wafer Lug Body
Double Disc Check Valve, 900 lb.
Alloy 20 (ASTM A 351, Grade CN7M)

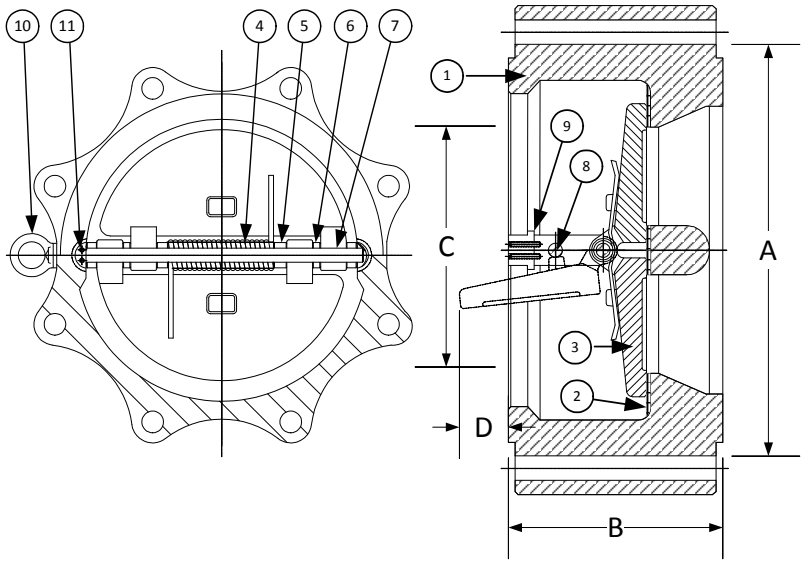

PARTS LIST		
ITEM	DESCRIPTION	MATERIAL
1	Body	Alloy 20 (ASTM A 351, Grade CN7M)
2	Seat	Viton O-Ring
3	Disc	Alloy 20 (ASTM A 351, Grade CN7M)
4	Spring	Inconel X-750
5	Spring Plate	Stainless Steel (ASTM A 182, Grade F-316)
6	Thrust Washer	Stainless Steel (ASTM A 182, Grade F-316)
7	Hinge Pin	Stainless Steel (ASTM A 182, Grade F-316)
8	Stop Pin	Stainless Steel (ASTM A 182, Grade F-316)
9	Locating Piece	Stainless Steel (ASTM A 182, Grade F-316)
10	Lifting Lug	Carbon Steel
11	Screw	Stainless Steel (316)

Above "Standard" Product Number – **DL6R-A2-A24IX**
Other Options - Reference C2 for available materials.

SIZE		DIMENSIONS						WEIGHTS	
		A		B		C*			
in	mm	in	mm	in	mm	in	mm	lbs	kgs
2	50	5-5/8	143	2-3/4	70	-	-	26	12
2-1/2	65	6-1/2	165	3-1/4	83	2	51	40	18
3	80	6-5/8	168	3-1/4	83	2-1/8	54	44	20
4	100	8-1/8	206	4	102	3-1/16	78	68	31
6	150	11-3/8	289	6-1/4	159	3-5/8	92	240	109
8	200	14-1/8	359	8-1/8	206	6-1/2	165	443	201
10	250	17-1/8	435	9-1/2	241	8-3/16	208	661	300
12	300	19-5/8	498	11-1/2	292	9-3/4	248	981	445
14	350	20-1/2	521	14	356	8-15/16	227	1241	563
16	400	22-5/8	575	15-1/8	384	11-7/32	285	2074	941
18	450	25-1/8	638	17-3/4	451	13-15/16	354	1418	643
20	500	27-1/2	699	17-3/4	451	17-1/16	433	1892	858
24	600	33	838	19-1/2	495	20-15/32	520	2786	1264

*Minimum companion flange bore.

Available with thru-hole bolting or threaded bolt holes.

Seat Material	Operating Temperature**	
	°F	°C
Buna-N	-20 to 250	-29 to 121
Viton	-20 to 400	-29 to 204
EPDM	-40 to 300	-40 to 149

**Subject to limitations of body material.

Applicable Standards
• Design ASME B16.5
• Design ASME B16.34
• Testing API 598
• Conforms to API 594 & 6D
• MSS SP – 6
• MSS SP – 25
• MSS SP – 55

FLOW COEFFICIENTS

Size	2"	2-1/2"	3"	4"	5"	6"
C_v	48	98	170	290	495	720
Size	8"	10"	12"	14"	16"	18"
C_v	1800	2600	4300	5500	7200	9400
Size	20"	24"				
C_v	12600	19000				

KECKLEY

TECHNICAL DATA
DIMENSIONS AND WEIGHTS

Style DL

Retainerless Wafer Lug Body
Double Disc Check Valve, 1500 lb.
Alloy 20 (ASTM A 351, Grade CN7M)

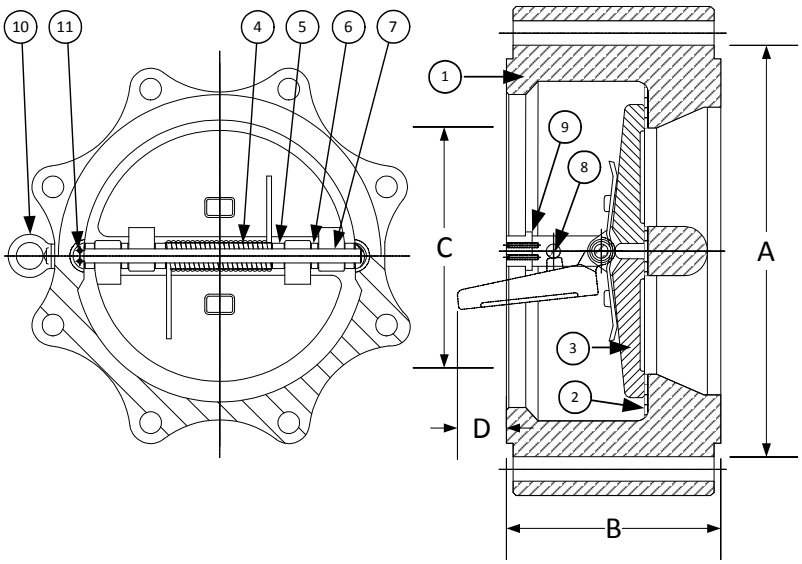

PARTS LIST		
ITEM	DESCRIPTION	MATERIAL
1	Body	Alloy 20 (ASTM A 351, Grade CN7M)
2	Seat	Viton O-Ring
3	Disc	Alloy 20 (ASTM A 351, Grade CN7M)
4	Spring	Inconel X-750
5	Spring Plate	Stainless Steel (ASTM A 182, Grade F-316)
6	Thrust Washer	Stainless Steel (ASTM A 182, Grade F-316)
7	Hinge Pin	Stainless Steel (ASTM A 182, Grade F-316)
8	Stop Pin	Stainless Steel (ASTM A 182, Grade F-316)
9	Locating Piece	Stainless Steel (ASTM A 182, Grade F-316)
10	Lifting Lug	Carbon Steel
11	Screw	Stainless Steel (316)

Above "Standard" Product Number – **DL7R-A2-A24IX**
Other Options - Reference C2 for available materials.

SIZE		DIMENSIONS						WEIGHTS	
		A		B		C*			
in	mm	in	mm	in	mm	in	mm	lbs	kgs
2	50	5-5/8	143	2-3/4	70	1-11/16	43	37	17
3	80	6-7/8	175	3-1/4	83	2-5/8	67	70	32
4	100	8-1/4	210	4	102	3-7/16	87	112	51
6	150	11-1/8	283	6-1/4	159	5-3/16	132	262	119
8	200	13-7/8	352	8-1/8	206	6-13/16	173	488	221
10	250	17-1/8	435	9-3/4	248	8-1/2	216	917	416
12	300	20-1/2	521	12	305	10-1/8	257	1425	646
14	350	22-3/4	578	14	356	11-1/2	292	245	928
16	400	25-1/4	641	15-1/8	384	12-13/16	325	2600	1179
18	450	27-3/4	705	18-7/16	468	13-3/4	349	3883	1761
20	500	29-3/4	756	21	533	14-3/4	348	5700	2580
24	600	35-1/2	902	22	559	15-1/8	384	7150	3236

*Minimum companion flange bore.
Available with thru-hole bolting or threaded bolt holes.

Sizes 30" and larger fit **Series A** flanges.

Seat Material	Operating Temperature**	
	°F	°C
Buna-N	-20 to 250	-29 to 121
Viton	-20 to 400	-29 to 204
EPDM	-40 to 300	-40 to 149

**Subject to limitations of body material.

Applicable Standards
• Design ASME B16.5
• Design ASME B16.34
• Testing API 598
• Conforms to API 594 & 6D
• MSS SP – 6
• MSS SP – 25
• MSS SP – 55

FLOW COEFFICIENTS

Size	2"	2½"	3"	4"	5"	6"
C_v	48	98	170	290	495	720
Size	8"	10"	12"	14"	16"	18"
C_v	1800	2600	4300	5500	7200	9400
Size	20"	24"				
C_v	12600	19000				

KECKLEY COMPANY • 3400 Cleveland Street • Skokie, Illinois 60076 1-800-KECKLEY

KECKLEY

TECHNICAL DATA
DIMENSIONS AND WEIGHTS

Style DL

Retainerless Wafer Lug Body
Double Disc Check Valve, 150 lb.
Hastelloy C276 (ASTM A 494, Grade CW12MW)

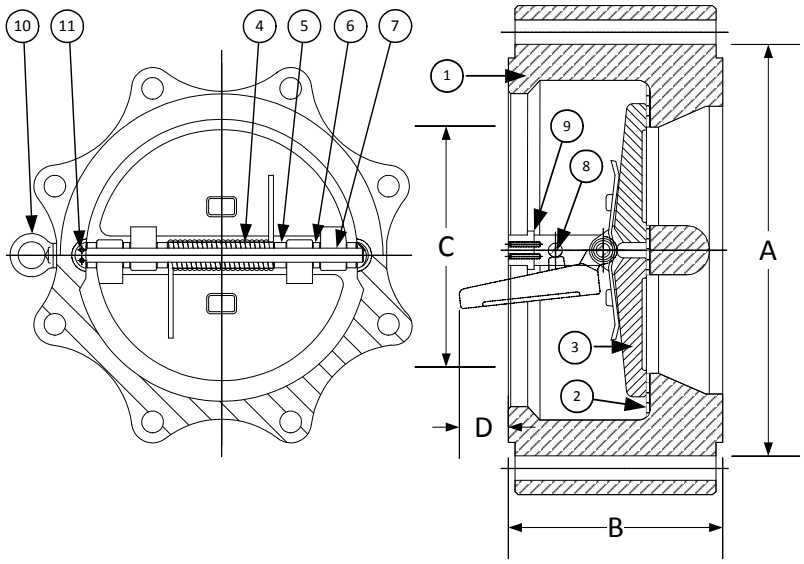

PARTS LIST		
ITEM	DESCRIPTION	MATERIAL
1	Body	Hastelloy C276 (ASTM A 494, Grade CW12MW)
2	Seat	Viton O-Ring
3	Disc	Hastelloy C276 (ASTM A 494, Grade CW12MW)
4	Spring	Inconel X-750
5	Spring Plate	Stainless Steel (ASTM A 182, Grade F-316)
6	Thrust Washer	Stainless Steel (ASTM A 182, Grade F-316)
7	Hinge Pin	Stainless Steel (ASTM A 182, Grade F-316)
8	Stop Pin	Stainless Steel (ASTM A 182, Grade F-316)
9	Locating Piece	Stainless Steel (ASTM A 182, Grade F-316)
10	Lifting Lug	Carbon Steel
11	Screw	Stainless Steel (316)

Above "Standard" Product Number – **DL2R-DP-DP4IX**
Other Options - Reference C2 for available materials.

SIZE		DIMENSIONS						WEIGHTS	
		A		B		C*			
in	mm	in	mm	in	mm	in	mm	lbs	kgs
2	50	4-1/8	105	2-3/8	60	1-15/16	49	18	8
2-1/2	65	4-7/8	124	2-5/8	67	2-11/32	60	22	10
3	80	5-3/8	137	2-7/8	73	2-29/32	74	30	14
4	100	6-7/8	175	2-7/8	73	3-53/64	97	44	20
5	125	7-3/4	197	3-3/8	86	4-13/16	122	51	23
6	150	8-3/4	222	3-7/8	98	5-49/64	146	84	38
8	200	11	279	5	127	7-1/2	191	91	41
10	250	13-3/8	340	5-3/4	146	9-7/16	240	156	71
12	300	16-1/8	410	7-1/8	181	11-1/4	286	252	114
14	350	17-3/4	441	7-1/4	184	12-5/8	321	291	132
16	400	20-1/4	514	7-1/2	191	14-11/16	373	464	210
18	450	21-5/8	549	8	203	16-9/16	421	431	195
20	500	23-7/8	606	8-5/8	219	18-7/16	468	501	227
24	600	28-1/4	718	8-3/4	222	21-5/8	549	682	309
30	750	34-3/4	883	12	305	28-7/16	722	1321	599
36	900	41-1/4	1048	14-1/2	368	34-3/8	873	1898	861
42	1050	48	1219	17	432	40-9/16	1030	3236	1468
48	1200	54-1/2	1384	20-5/8	524	44-3/16	1122	4899	2222

*Minimum companion flange bore.

Available with thru-hole bolting or threaded bolt holes.

Seat Material	Operating Temperature**	
	°F	°C
Buna-N	-20 to 250	-29 to 121
Viton	-20 to 400	-29 to 204
EPDM	-40 to 300	-40 to 149

**Subject to limitations of body material.

Applicable Standards
• Design ASME B16.5
• Design ASME B16.34
• Testing API 598
• Conforms to API 594 & 6D
• MSS SP – 6
• MSS SP – 25
• MSS SP – 55

FLOW COEFFICIENTS

Size	2"	2-1/2"	3"	4"	5"	6"
C_v	48	98	170	290	495	720
Size	**8"**	**10"**	**12"**	**14"**	**16"**	**18"**
C_v	1800	2600	4300	5500	7200	9400
Size	**20"**	**24"**	**30"**	**36"**	**42"**	**48"**
C_v	12600	19000	37500	60000	89000	124000

KECKLEY

TECHNICAL DATA
DIMENSIONS AND WEIGHTS

Style DL

Retainerless Wafer Lug Body
Double Disc Check Valve, 300 lb.
Hastelloy C276 (ASTM A 494, Grade CW12MW)

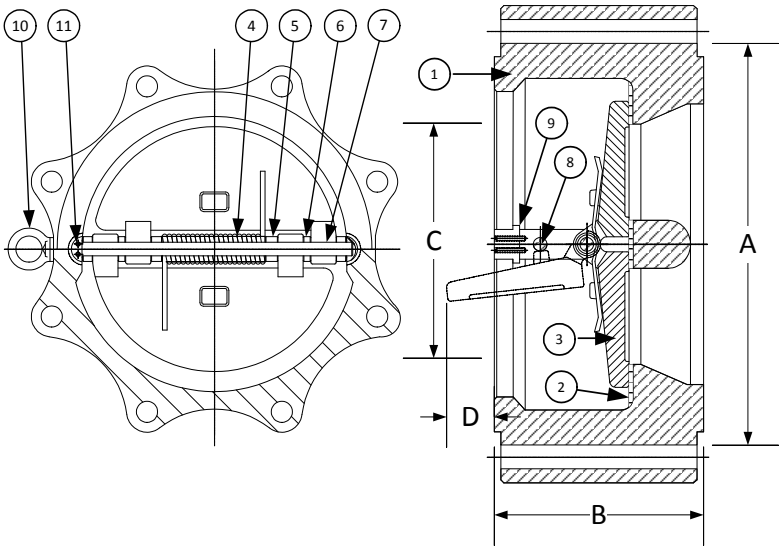

PARTS LIST		
ITEM	DESCRIPTION	MATERIAL
1	Body	Hastelloy C276 (ASTM A 494, Grade CW12MW)
2	Seat	Viton O-Ring
3	Disc	Hastelloy C276 (ASTM A 494, Grade CW12MW)
4	Spring	Inconel X-750
5	Spring Plate	Stainless Steel (ASTM A 182, Grade F-316)
6	Thrust Washer	Stainless Steel (ASTM A 182, Grade F-316)
7	Hinge Pin	Stainless Steel (ASTM A 182, Grade F-316)
8	Stop Pin	Stainless Steel (ASTM A 182, Grade F-316)
9	Locating Piece	Stainless Steel (ASTM A 182, Grade F-316)
10	Lifting Lug	Carbon Steel
11	Screw	Stainless Steel (316)

Above "Standard" Product Number – **DL4R-HC-HC4IX**
Other Options - Reference C2 for available materials.

SIZE		DIMENSIONS						WEIGHTS	
		A		B		C*			
in	mm	in	mm	in	mm	in	mm	lbs	kgs
2	50	4-3/8	111	2-3/8	60	1-15/16	49	18	8
2-1/2	65	5-1/8	130	2-5/8	67	2-11/32	60	22	10
3	80	5-7/8	149	2-7/8	73	2-29/32	74	30	14
4	100	7-1/8	181	2-7/8	73	3-53/64	97	44	20
5	125	8-1/2	216	3-3/8	86	4-13/16	122	51	23
6	150	9-7/8	251	3-7/8	98	5-49/64	146	84	38
8	200	12-1/8	308	5	127	7-5/8	194	163	74
10	250	14-1/4	362	5-3/4	146	9-9/16	243	270	123
12	300	16-5/8	422	7-1/8	181	11-1/4	286	361	164
14	350	19-1/8	486	8-3/4	222	12-7/16	316	543	246
16	400	21-1/4	540	9-1/8	232	14-1/2	368	792	359
18	450	23-1/2	597	10-3/8	264	16-3/8	416	790	358
20	500	25-3/4	654	11-1/2	292	18-1/16	459	780	354
24	600	30-1/2	775	12-1/2	318	20-11/16	525	1011	459
30	750	37-1/2	953	14-1/2	368	27-5/8	702	1974	895
36	900	44	1118	19	483	33-1/2	851	3926	1781
42	1050	45-7/8	1165	22-3/8	568	39-1/2	1003	4830	2191
48	1200	52-1/2	1334	24-3/4	629	42-1/4	1073	6653	3018

*Minimum companion flange bore.

Available with thru-hole bolting or threaded bolt holes.

Seat Material	Operating Temperature**	
	°F	°C
Buna-N	-20 to 250	-29 to 121
Viton	-20 to 400	-29 to 204
EPDM	-40 to 300	-40 to 149

**Subject to limitations of body material.

Applicable Standards
• Design ASME B16.5
• Design ASME B16.34
• Testing API 598
• Conforms to API 594 & 6D
• MSS SP – 6
• MSS SP – 25
• MSS SP – 55

FLOW COEFFICIENTS

Size	2"	2-1/2"	3"	4"	5"	6"
C_v	48	98	170	290	495	720
Size	8"	10"	12"	14"	16"	18"
C_v	1800	2600	4300	5500	7200	9400
Size	20"	24"	30"	36"	42"	48"
C_v	12600	19000	37500	60000	89000	124000

KECKLEY COMPANY • 3400 Cleveland Street • Skokie, Illinois 60076 1-800-KECKLEY

KECKLEY

TECHNICAL DATA
DIMENSIONS AND WEIGHTS

Style DL

Retainerless Wafer Lug Body
Double Disc Check Valve, 600 lb.
Hastelloy C276 (ASTM A 494, Grade CW12MW)

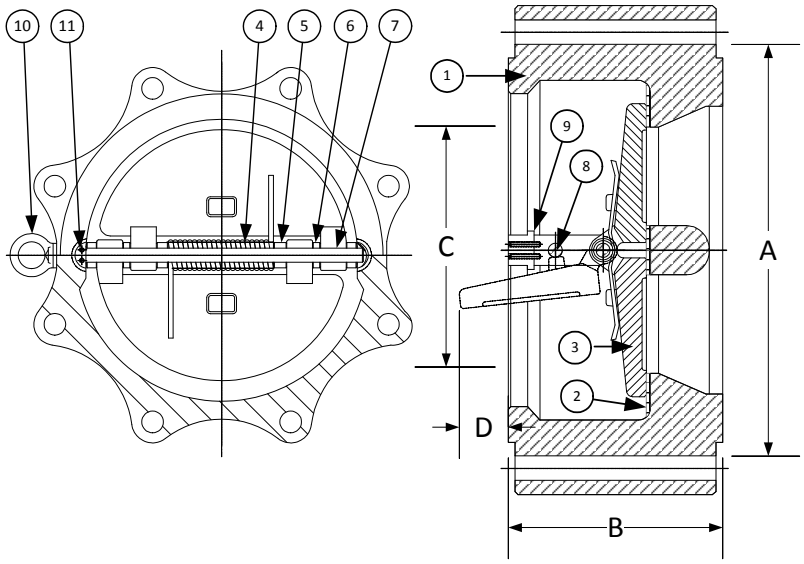

PARTS LIST		
ITEM	DESCRIPTION	MATERIAL
1	Body	Hastelloy C276 (ASTM A 484, Grade CW12MW)
2	Seat	Viton O-Ring
3	Disc	Hastelloy C276 (ASTM A 484, Grade CW12MW)
4	Spring	Inconel X-750
5	Spring Plate	Stainless Steel (ASTM A 182, Grade F-316)
6	Thrust Washer	Stainless Steel (ASTM A 182, Grade F-316)
7	Hinge Pin	Stainless Steel (ASTM A 182, Grade F-316)
8	Stop Pin	Stainless Steel (ASTM A 182, Grade F-316)
9	Locating Piece	Stainless Steel (ASTM A 182, Grade F-316)
10	Lifting Lug	Carbon Steel
11	Screw	Stainless Steel (316)

Above "Standard" Product Number – **DL5R-HC-HC4IX**
Other Options - Reference C2 for available materials.

SIZE		DIMENSIONS						WEIGHTS	
		A		B		C*			
in	mm	in	mm	in	mm	in	mm	lbs	kgs
2	50	4-3/8	111	2-3/8	60	1-3/16	30	18	8
2-1/2	65	5-1/8	130	2-5/8	67	2-1/8	54	27	12
3	80	5-7/8	149	2-7/8	73	2-3/16	56	27	12
4	100	7-5/8	194	3-1/8	79	3-5/16	84	51	23
5	125	9-1/2	241	4-1/8	105	4-1/2	114	97	44
6	150	10-1/2	267	5-3/8	137	4-3/4	121	151	68
8	200	12-5/8	321	6-1/2	165	6-25/32	172	261	118
10	250	15-3/4	400	8-3/8	213	8-1/2	216	460	209
12	300	18	457	9	229	10-9/16	268	587	266
14	350	19-3/8	492	10-3/4	273	11-15/16	303	817	371
16	400	22-1/4	565	12	305	13-1/2	343	1058	480
18	450	24-1/8	613	14-1/4	362	13-3/4	349	1011	459
20	500	26-7/8	683	14-1/2	368	16-15/16	430	1279	580
24	600	31-1/8	791	17-1/4	438	20-1/2	521	1851	840
30	750	38-1/4	972	19-7/8	505	26-1/2	673	2987	1355
36	900	44	1118	25	635	30-3/8	772	5364	2433
42	1050	48	1219	27-5/8	702	37-7/16	951	7048	3197

*Minimum companion flange bore.

Available with thru-hole bolting or threaded bolt holes.

Seat Material	Operating Temperature**	
	°F	°C
Buna-N	-20 to 250	-29 to 121
Viton	-20 to 400	-29 to 204
EPDM	-40 to 300	-40 to 149

**Subject to limitations of body material.

Applicable Standards
• Design ASME B16.5
• Design ASME B16.34
• Testing API 598
• Conforms to API 594 & 6D
• MSS SP – 6
• MSS SP – 25
• MSS SP – 55

FLOW COEFFICIENTS

Size	2"	2-1/2"	3"	4"	5"	6"
C_v	48	98	170	290	495	720
Size	**8"**	**10"**	**12"**	**14"**	**16"**	**18"**
C_v	1800	2600	4300	5500	7200	9400
Size	**20"**	**24"**	**30"**	**36"**	**42"**	
C_v	12600	19000	37500	60000	89000	

KECKLEY

TECHNICAL DATA
DIMENSIONS AND WEIGHTS

Style DL

Retainerless Wafer Lug Body
Double Disc Check Valve, 900 lb.
Hastelloy C276 (ASTM A 494, Grade CW12MW)

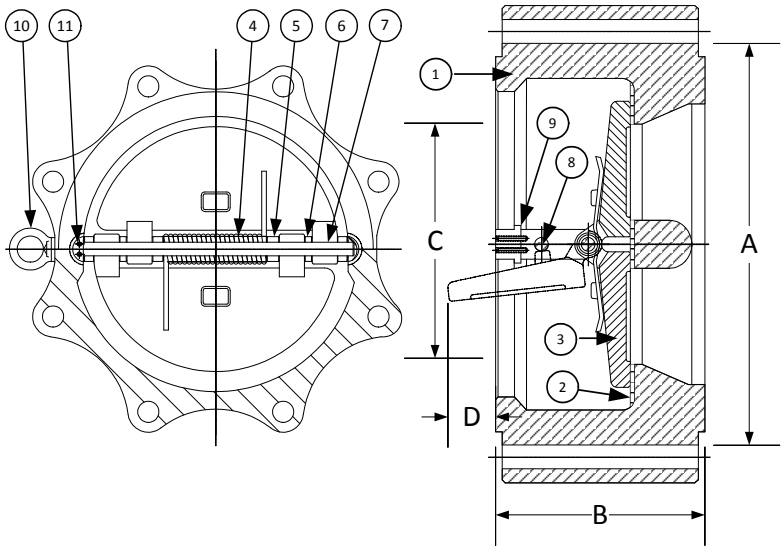

PARTS LIST		
ITEM	DESCRIPTION	MATERIAL
1	Body	Hastelloy C276 (ASTM A 494, Grade CW12MW)
2	Seat	Viton O-Ring
3	Disc	Hastelloy C276 (ASTM A 494, Grade CW12MW)
4	Spring	Inconel X-750
5	Spring Plate	Stainless Steel (ASTM A 182, Grade F-316)
6	Thrust Washer	Stainless Steel (ASTM A 182, Grade F-316)
7	Hinge Pin	Stainless Steel (ASTM A 182, Grade F-316)
8	Stop Pin	Stainless Steel (ASTM A 182, Grade F-316)
9	Locating Piece	Stainless Steel (ASTM A 182, Grade F-316)
10	Lifting Lug	Carbon Steel
11	Screw	Stainless Steel (316)

Above "Standard" Product Number – **DL6R-HC-HC4IX**
Other Options - Reference C2 for available materials.

SIZE		DIMENSIONS						WEIGHTS	
		A		B		C*			
in	mm	in	mm	in	mm	in	mm	lbs	kgs
2	50	5-5/8	143	2-3/4	70	-	-	26	12
2-1/2	65	6-1/2	165	3-1/4	83	2	51	40	18
3	80	6-5/8	168	3-1/4	83	2-1/8	54	44	20
4	100	8-1/8	206	4	102	3-1/16	78	68	31
6	150	11-3/8	289	6-1/4	159	3-5/8	92	240	109
8	200	14-1/8	359	8-1/8	206	6-1/2	165	443	201
10	250	17-1/8	435	9-1/2	241	8-3/16	208	661	300
12	300	19-5/8	498	11-1/2	292	9-3/4	248	981	445
14	350	20-1/2	521	14	356	8-15/16	227	1241	563
16	400	22-5/8	575	15-1/8	384	11-7/32	285	2074	941
18	450	25-1/8	638	17-3/4	451	13-15/16	354	1418	643
20	500	27-1/2	699	17-3/4	451	17-1/16	433	1892	858
24	600	33	838	19-1/2	495	20-15/32	520	2786	1264

*Minimum companion flange bore.

Available with thru-hole bolting or threaded bolt holes.

Seat Material	Operating Temperature**	
	°F	°C
Buna-N	-20 to 250	-29 to 121
Viton	-20 to 400	-29 to 204
EPDM	-40 to 300	-40 to 149

**Subject to limitations of body material.

Applicable Standards
• Design ASME B16.5
• Design ASME B16.34
• Testing API 598
• Conforms to API 594 & 6D
• MSS SP – 6
• MSS SP – 25
• MSS SP – 55

FLOW COEFFICIENTS

Size	2"	2-1/2"	3"	4"	5"	6"
C_v	48	98	170	290	495	720
Size	8"	10"	12"	14"	16"	18"
C_v	1800	2600	4300	5500	7200	9400
Size	20"	24"				
C_v	12600	19000				

KECKLEY COMPANY • 3400 Cleveland Street • Skokie, Illinois 60076 1-800-KECKLEY

KECKLEY

TECHNICAL DATA
DIMENSIONS AND WEIGHTS

Style DL

Retainerless Wafer Lug Body
Double Disc Check Valve, 1500 lb.
Hastelloy C276 (ASTM A 494, Grade CW12MW)

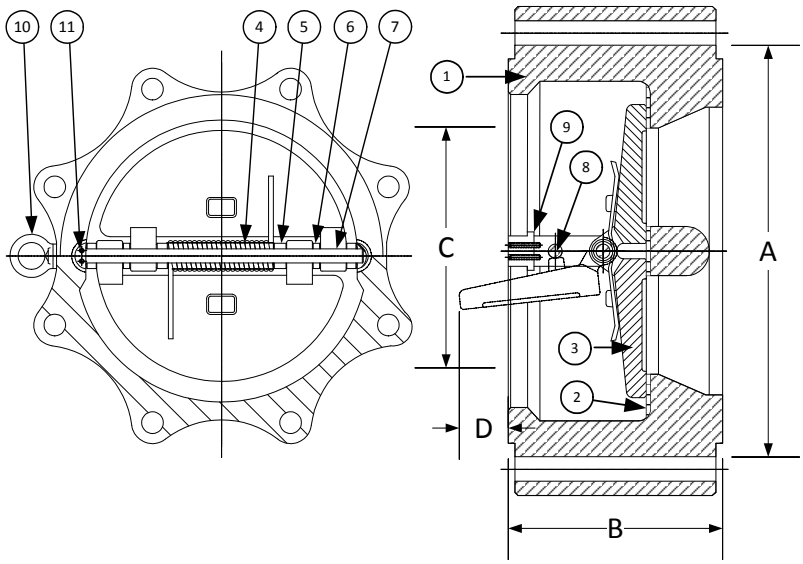

PARTS LIST		
ITEM	DESCRIPTION	MATERIAL
1	Body	Hastelloy C276 (ASTM A 494, Grade CW12MW)
2	Seat	Viton O-Ring
3	Disc	Hastelloy C276 (ASTM A 494, Grade CW12MW)
4	Spring	Inconel X-750
5	Spring Plate	Stainless Steel (ASTM A 182, Grade F-316)
6	Thrust Washer	Stainless Steel (ASTM A 182, Grade F-316)
7	Hinge Pin	Stainless Steel (ASTM A 182, Grade F-316)
8	Stop Pin	Stainless Steel (ASTM A 182, Grade F-316)
9	Locating Piece	Stainless Steel (ASTM A 182, Grade F-316)
10	Lifting Lug	Carbon Steel
11	Screw	Stainless Steel (316)

Above "Standard" Product Number – **DL7R-HC-HC4IX**
Other Options - Reference C2 for available materials.

SIZE		DIMENSIONS						WEIGHTS	
		A		B		C*			
in	mm	in	mm	in	mm	in	mm	lbs	kgs
2	50	5-5/8	143	2-3/4	70	1-11/16	43	37	17
3	80	6-7/8	175	3-1/4	83	2-5/8	67	70	32
4	100	8-1/4	210	4	102	3-7/16	87	112	51
6	150	11-1/8	283	6-1/4	159	5-3/16	132	262	119
8	200	13-7/8	352	8-1/8	206	6-13/16	173	488	221
10	250	17-1/8	435	9-3/4	248	8-1/2	216	917	416
12	300	20-1/2	521	12	305	10-1/8	257	1425	646
14	350	22-3/4	578	14	356	11-1/2	292	245	928
16	400	25-1/4	641	15-1/8	384	12-13/16	325	2600	1179
18	450	27-3/4	705	18-7/16	468	13-3/4	349	3883	1761
20	500	29-3/4	756	21	533	14-3/4	348	5700	2580
24	600	35-1/2	902	22	559	15-1/8	384	7150	3236

*Minimum companion flange bore.
Available with thru-hole bolting or threaded bolt holes.

Sizes 30" and larger fit **Series A** flanges.

Seat Material	Operating Temperature**	
	°F	°C
Buna-N	-20 to 250	-29 to 121
Viton	-20 to 400	-29 to 204
EPDM	-40 to 300	-40 to 149

**Subject to limitations of body material.

Applicable Standards
• Design ASME B16.5
• Design ASME B16.34
• Testing API 598
• Conforms to API 594 & 6D
• MSS SP – 6
• MSS SP – 25
• MSS SP – 55

FLOW COEFFICIENTS

Size	2"	2½"	3"	4"	5"	6"
C_v	48	98	170	290	495	720
Size	8"	10"	12"	14"	16"	18"
C_v	1800	2600	4300	5500	7200	9400
Size	20"	24"				
C_v	12600	19000				

KECKLEY

TECHNICAL DATA
DIMENSIONS AND WEIGHTS

Style DL

Retainerless Wafer Lug Body
Double Disc Check Valve, 150 lb.
Monel (ASTM A 494, Grade M35-2)

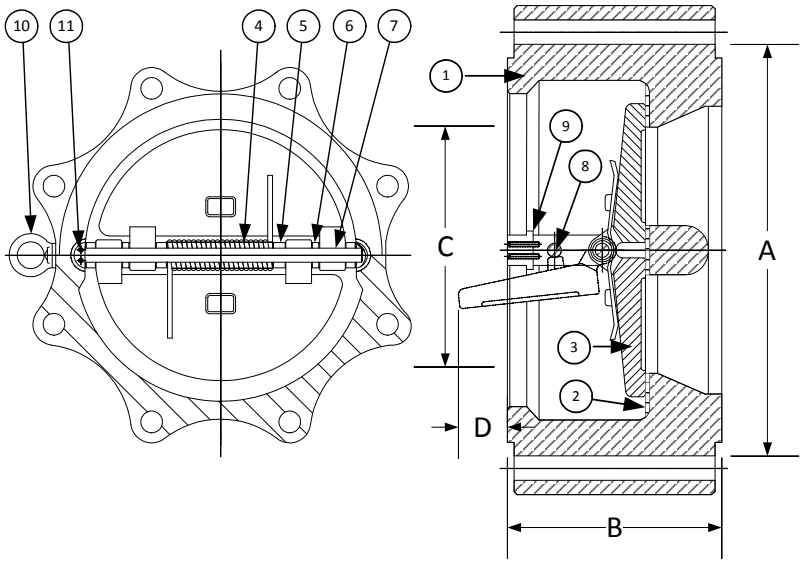

PARTS LIST		
ITEM	DESCRIPTION	MATERIAL
1	Body	Monel (ASTM A 494, Grade M35-2)
2	Seat	Viton O-Ring
3	Disc	Monel (ASTM A 494, Grade M35-2)
4	Spring	Inconel X-750
5	Spring Plate	Stainless Steel (ASTM A 182, Grade F-316)
6	Thrust Washer	Stainless Steel (ASTM A 182, Grade F-316)
7	Hinge Pin	Stainless Steel (ASTM A 182, Grade F-316)
8	Stop Pin	Stainless Steel (ASTM A 182, Grade F-316)
9	Locating Piece	Stainless Steel (ASTM A 182, Grade F-316)
10	Lifting Lug	Carbon Steel
11	Screw	Stainless Steel (316)

Above "Standard" Product Number – **DL2R-ML-ML4IX**
Other Options - Reference C2 for available materials.

SIZE		DIMENSIONS						WEIGHTS	
		A		B		C*			
in	mm	in	mm	in	mm	in	mm	lbs	kgs
2	50	4-1/8	105	2-3/8	60	1-15/16	49	18	8
2-1/2	65	4-7/8	124	2-5/8	67	2-11/32	60	22	10
3	80	5-3/8	137	2-7/8	73	2-29/32	74	30	14
4	100	6-7/8	175	2-7/8	73	3-53/64	97	44	20
5	125	7-3/4	197	3-3/8	86	4-13/16	122	51	23
6	150	8-3/4	222	3-7/8	98	5-49/64	146	84	38
8	200	11	279	5	127	7-1/2	191	91	41
10	250	13-3/8	340	5-3/4	146	9-7/16	240	156	71
12	300	16-1/8	410	7-1/8	181	11-1/4	286	252	114
14	350	17-3/4	441	7-1/4	184	12-5/8	321	291	132
16	400	20-1/4	514	7-1/2	191	14-11/16	373	464	210
18	450	21-5/8	549	8	203	16-9/16	421	431	195
20	500	23-7/8	606	8-5/8	219	18-7/16	468	501	227
24	600	28-1/4	718	8-3/4	222	21-5/8	549	682	309
30	750	34-3/4	883	12	305	28-7/16	722	1321	599
36	900	41-1/4	1048	14-1/2	368	34-3/8	873	1898	861
42	1050	48	1219	17	432	40-9/16	1030	3236	1468
48	1200	54-1/2	1384	20-5/8	524	44-3/16	1122	4899	2222

*Minimum companion flange bore.

Available with thru-hole bolting or threaded bolt holes.

Seat Material	Operating Temperature**	
	°F	°C
Buna-N	-20 to 250	-29 to 121
Viton	-20 to 400	-29 to 204
EPDM	-40 to 300	-40 to 149

**Subject to limitations of body material.

Applicable Standards
• Design ASME B16.5
• Design ASME B16.34
• Testing API 598
• Conforms to API 594 & 6D
• MSS SP – 6
• MSS SP – 25
• MSS SP – 55

FLOW COEFFICIENTS

Size	2"	2-1/2"	3"	4"	5"	6"
C_v	48	98	170	290	495	720
Size	**8"**	**10"**	**12"**	**14"**	**16"**	**18"**
C_v	1800	2600	4300	5500	7200	9400
Size	**20"**	**24"**	**30"**	**36"**	**42"**	**48"**
C_v	12600	19000	37500	60000	89000	124000

KECKLEY COMPANY • 3400 Cleveland Street • Skokie, Illinois 60076 1-800-KECKLEY

KECKLEY

TECHNICAL DATA
DIMENSIONS AND WEIGHTS

Style DL

Retainerless Wafer Lug Body
Double Disc Check Valve, 300 lb.
Monel (ASTM A 494, Grade M35-2)

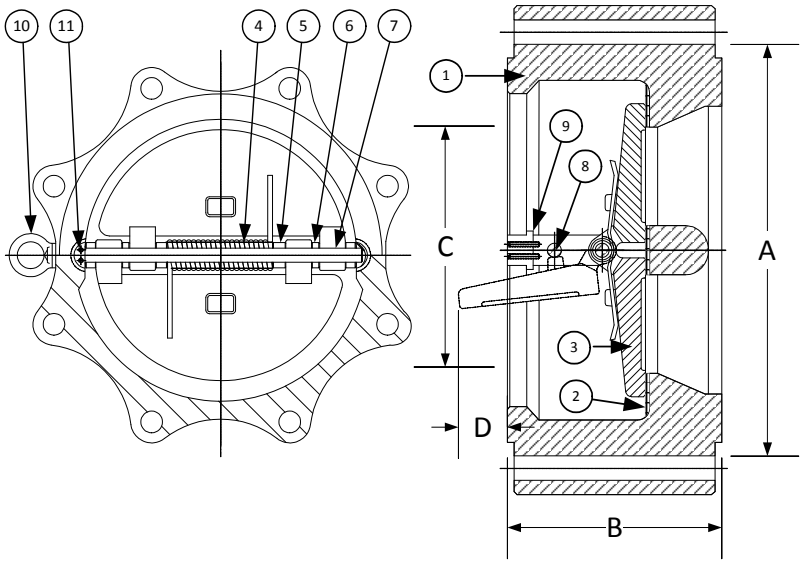

PARTS LIST		
ITEM	DESCRIPTION	MATERIAL
1	Body	Monel (ASTM A 494, Grade M35-2)
2	Seat	Viton O-Ring
3	Disc	Monel (ASTM A 494, Grade M35-2)
4	Spring	Inconel X-750
5	Spring Plate	Stainless Steel (ASTM A 182, Grade F-316)
6	Thrust Washer	Stainless Steel (ASTM A 182, Grade F-316)
7	Hinge Pin	Stainless Steel (ASTM A 182, Grade F-316)
8	Stop Pin	Stainless Steel (ASTM A 182, Grade F-316)
9	Locating Piece	Stainless Steel (ASTM A 182, Grade F-316)
10	Lifting Lug	Carbon Steel
11	Screw	Stainless Steel (316)

Above "Standard" Product Number – **DL4R-ML-ML4IX**
Other Options - Reference C2 for available materials.

SIZE		DIMENSIONS						WEIGHTS	
		A		B		C*			
in	mm	in	mm	in	mm	in	mm	lbs	kgs
2	50	4-3/8	111	2-3/8	60	1-15/16	49	18	8
2-1/2	65	5-1/8	130	2-5/8	67	2-11/32	60	22	10
3	80	5-7/8	149	2-7/8	73	2-29/32	74	30	14
4	100	7-1/8	181	2-7/8	73	3-53/64	97	44	20
5	125	8-1/2	216	3-3/8	86	4-13/16	122	51	23
6	150	9-7/8	251	3-7/8	98	5-49/64	146	84	38
8	200	12-1/8	308	5	127	7-5/8	194	163	74
10	250	14-1/4	362	5-3/4	146	9-9/16	243	270	123
12	300	16-5/8	422	7-1/8	181	11-1/4	286	361	164
14	350	19-1/8	486	8-3/4	222	12-7/16	316	543	246
16	400	21-1/4	540	9-1/8	232	14-1/2	368	792	359
18	450	23-1/2	597	10-3/8	264	16-3/8	416	790	358
20	500	25-3/4	654	11-1/2	292	18-1/16	459	780	354
24	600	30-1/2	775	12-1/2	318	20-11/16	525	1011	459
30	750	37-1/2	953	14-1/2	368	27-5/8	702	1974	895
36	900	44	1118	19	483	33-1/2	851	3926	1781
42	1050	45-7/8	1165	22-3/8	568	39-1/2	1003	4830	2191
48	1200	52-1/2	1334	24-3/4	629	42-1/4	1073	6653	3018

*Minimum companion flange bore.

Available with thru-hole bolting or threaded bolt holes.

Seat Material	Operating Temperature**	
	°F	°C
Buna-N	-20 to 250	-29 to 121
Viton	-20 to 400	-29 to 204
EPDM	-40 to 300	-40 to 149

**Subject to limitations of body material.

Applicable Standards
• Design ASME B16.5
• Design ASME B16.34
• Testing API 598
• Conforms to API 594 & 6D
• MSS SP – 6
• MSS SP – 25
• MSS SP – 55

FLOW COEFFICIENTS

Size	2"	2-1/2"	3"	4"	5"	6"
C_v	48	98	170	290	495	720
Size	**8"**	**10"**	**12"**	**14"**	**16"**	**18"**
C_v	1800	2600	4300	5500	7200	9400
Size	**20"**	**24"**	**30"**	**36"**	**42"**	**48"**
C_v	12600	19000	37500	60000	89000	124000

KECKLEY

TECHNICAL DATA
DIMENSIONS AND WEIGHTS

Style DL

Retainerless Wafer Lug Body
Double Disc Check Valve, 600 lb.
Monel (ASTM A 484, Grade M35-2)

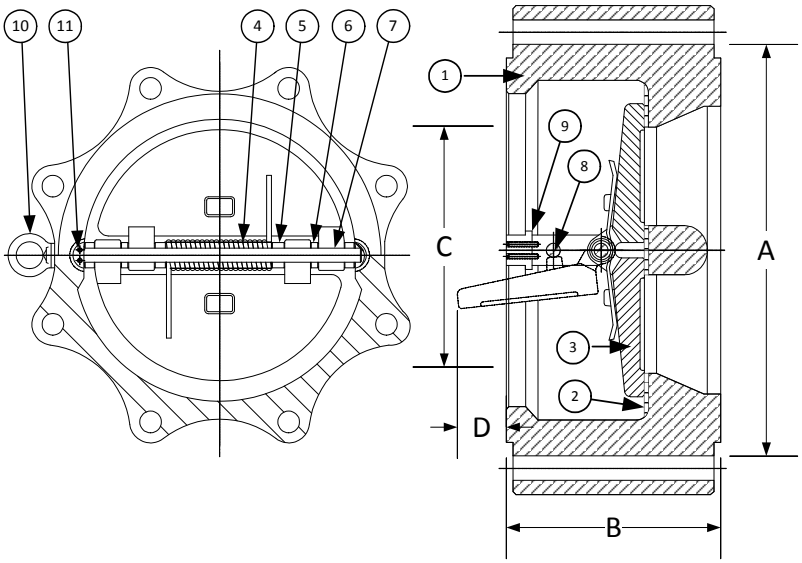

PARTS LIST		
ITEM	DESCRIPTION	MATERIAL
1	Body	Monel (ASTM A 494, Grade M35-2)
2	Seat	Viton O-Ring
3	Disc	Monel (ASTM A 494, Grade M35-2)
4	Spring	Inconel X-750
5	Spring Plate	Stainless Steel (ASTM A 182, Grade F-316)
6	Thrust Washer	Stainless Steel (ASTM A 182, Grade F-316)
7	Hinge Pin	Stainless Steel (ASTM A 182, Grade F-316)
8	Stop Pin	Stainless Steel (ASTM A 182, Grade F-316)
9	Locating Piece	Stainless Steel (ASTM A 182, Grade F-316)
10	Lifting Lug	Carbon Steel
11	Screw	Stainless Steel (316)

Above "Standard" Product Number – **DL5R-ML-ML4IX**
Other Options - Reference C2 for available materials.

SIZE		DIMENSIONS						WEIGHTS	
		A		B		C*			
in	mm	in	mm	in	mm	in	mm	lbs	kgs
2	50	4-3/8	111	2-3/8	60	1-3/16	30	18	8
2-1/2	65	5-1/8	130	2-5/8	67	2-1/8	54	27	12
3	80	5-7/8	149	2-7/8	73	2-3/16	56	27	12
4	100	7-5/8	194	3-1/8	79	3-5/16	84	51	23
5	125	9-1/2	241	4-1/8	105	4-1/2	114	97	44
6	150	10-1/2	267	5-3/8	137	4-3/4	121	151	68
8	200	12-5/8	321	6-1/2	165	6-25/32	172	261	118
10	250	15-3/4	400	8-3/8	213	8-1/2	216	460	209
12	300	18	457	9	229	10-9/16	268	587	266
14	350	19-3/8	492	10-3/4	273	11-15/16	303	817	371
16	400	22-1/4	565	12	305	13-1/2	343	1058	480
18	450	24-1/8	613	14-1/4	362	13-3/4	349	1011	459
20	500	26-7/8	683	14-1/2	368	16-15/16	430	1279	580
24	600	31-1/8	791	17-1/4	438	20-1/2	521	1851	840
30	750	38-1/4	972	19-7/8	505	26-1/2	673	2987	1355
36	900	44	1118	25	635	30-3/8	772	5364	2433
42	1050	48	1219	27-5/8	702	37-7/16	951	7048	3197

*Minimum companion flange bore.

Available with thru-hole bolting or threaded bolt holes.

Seat Material	Operating Temperature**	
	°F	°C
Buna-N	-20 to 250	-29 to 121
Viton	-20 to 400	-29 to 204
EPDM	-40 to 300	-40 to 149

**Subject to limitations of body material.

Applicable Standards
• Design ASME B16.5
• Design ASME B16.34
• Testing API 598
• Conforms to API 594 & 6D
• MSS SP – 6
• MSS SP – 25
• MSS SP – 55

FLOW COEFFICIENTS

Size	2"	2-1/2"	3"	4"	5"	6"
C_v	48	98	170	290	495	720
Size	**8"**	**10"**	**12"**	**14"**	**16"**	**18"**
C_v	1800	2600	4300	5500	7200	9400
Size	**20"**	**24"**	**30"**	**36"**	**42"**	
C_v	12600	19000	37500	60000	89000	

KECKLEY COMPANY • 3400 Cleveland Street • Skokie, Illinois 60076 1-800-KECKLEY

KECKLEY

TECHNICAL DATA
DIMENSIONS AND WEIGHTS

Style DL

Retainerless Wafer Lug Body
Double Disc Check Valve, 900 lb.
Monel (ASTM A 494, Grade M35-2)

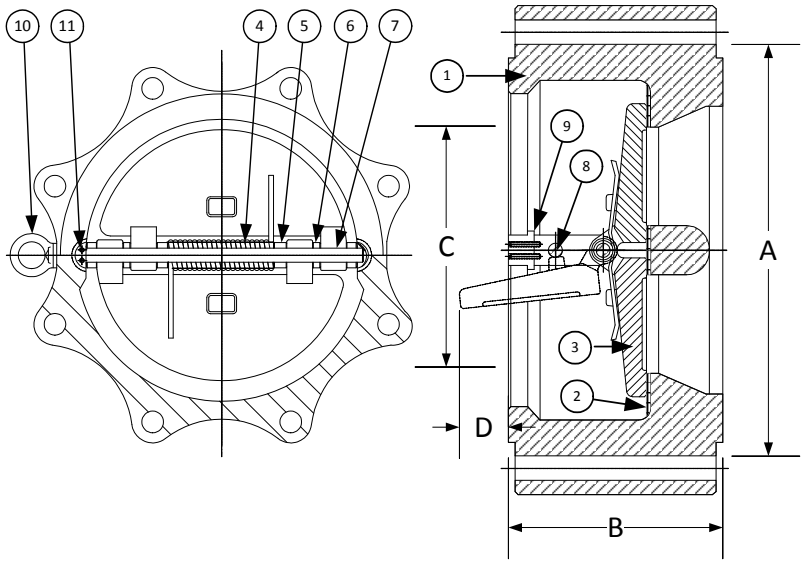

PARTS LIST		
ITEM	DESCRIPTION	MATERIAL
1	Body	Monel (ASTM A 494, Grade M35-2)
2	Seat	Viton O-Ring
3	Disc	Monel (ASTM A 494, Grade M35-2)
4	Spring	Inconel X-750
5	Spring Plate	Stainless Steel (ASTM A 182, Grade F-316)
6	Thrust Washer	Stainless Steel (ASTM A 182, Grade F-316)
7	Hinge Pin	Stainless Steel (ASTM A 182, Grade F-316)
8	Stop Pin	Stainless Steel (ASTM A 182, Grade F-316)
9	Locating Piece	Stainless Steel (ASTM A 182, Grade F-316)
10	Lifting Lug	Carbon Steel
11	Screw	Stainless Steel (316)

Above "Standard" Product Number – **DL6R-ML-ML4IX**
Other Options - Reference C2 for available materials.

SIZE		DIMENSIONS						WEIGHTS	
		A		B		C*			
in	mm	in	mm	in	mm	in	mm	lbs	kgs
2	50	5-5/8	143	2-3/4	70	-	-	26	12
2-1/2	65	6-1/2	165	3-1/4	83	2	51	40	18
3	80	6-5/8	168	3-1/4	83	2-1/8	54	44	20
4	100	8-1/8	206	4	102	3-1/16	78	68	31
6	150	11-3/8	289	6-1/4	159	3-5/8	92	240	109
8	200	14-1/8	359	8-1/8	206	6-1/2	165	443	201
10	250	17-1/8	435	9-1/2	241	8-3/16	208	661	300
12	300	19-5/8	498	11-1/2	292	9-3/4	248	981	445
14	350	20-1/2	521	14	356	8-15/16	227	1241	563
16	400	22-5/8	575	15-1/8	384	11-7/32	285	2074	941
18	450	25-1/8	638	17-3/4	451	13-15/16	354	1418	643
20	500	27-1/2	699	17-3/4	451	17-1/16	433	1892	858
24	600	33	838	19-1/2	495	20-15/32	520	2786	1264

*Minimum companion flange bore.

Available with thru-hole bolting or threaded bolt holes.

Seat Material	Operating Temperature**	
	°F	°C
Buna-N	-20 to 250	-29 to 121
Viton	-20 to 400	-29 to 204
EPDM	-40 to 300	-40 to 149

**Subject to limitations of body material.

Applicable Standards
• Design ASME B16.5
• Design ASME B16.34
• Testing API 598
• Conforms to API 594 & 6D
• MSS SP – 6
• MSS SP – 25
• MSS SP – 55

FLOW COEFFICIENTS

Size	2"	2-1/2"	3"	4"	5"	6"
C_v	48	98	170	290	495	720
Size	8"	10"	12"	14"	16"	18"
C_v	1800	2600	4300	5500	7200	9400
Size	20"	24"				
C_v	12600	19000				

KECKLEY

TECHNICAL DATA
DIMENSIONS AND WEIGHTS

Style DL

Retainerless Wafer Lug Body
Double Disc Check Valve, 1500 lb.
Monel (ASTM A 494, Grade M35-2)

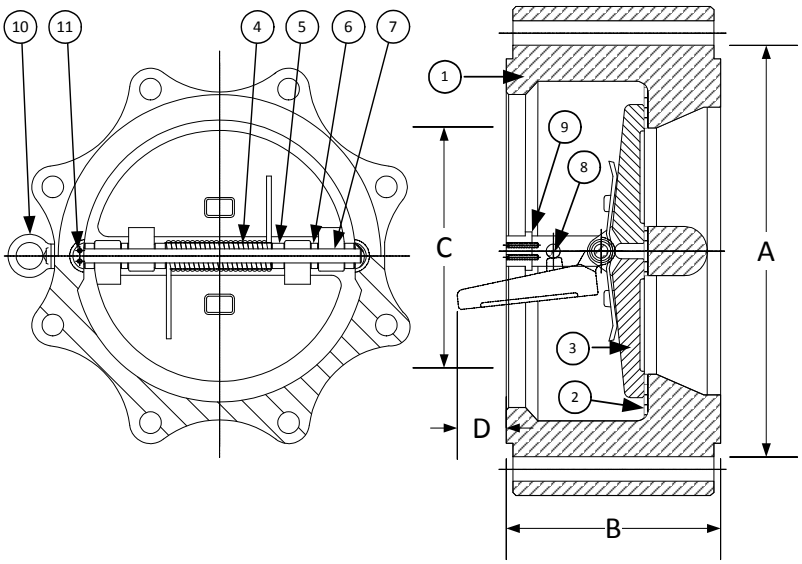

PARTS LIST		
ITEM	DESCRIPTION	MATERIAL
1	Body	Monel (ASTM A 494, Grade M35-2)
2	Seat	Viton O-Ring
3	Disc	Monel (ASTM A 494, Grade M35-2)
4	Spring	Inconel X-750
5	Spring Plate	Stainless Steel (ASTM A 182, Grade F-316)
6	Thrust Washer	Stainless Steel (ASTM A 182, Grade F-316)
7	Hinge Pin	Stainless Steel (ASTM A 182, Grade F-316)
8	Stop Pin	Stainless Steel (ASTM A 182, Grade F-316)
9	Locating Piece	Stainless Steel (ASTM A 182, Grade F-316)
10	Lifting Lug	Carbon Steel
11	Screw	Stainless Steel (316)

Above "Standard" Product Number – **DL7R-ML-ML4IX**
Other Options - Reference C2 for available materials.

SIZE		DIMENSIONS						WEIGHTS	
		A		B		C*			
in	mm	in	mm	in	mm	in	mm	lbs	kgs
2	50	5-5/8	143	2-3/4	70	1-11/16	43	37	17
3	80	6-7/8	175	3-1/4	83	2-5/8	67	70	32
4	100	8-1/4	210	4	102	3-7/16	87	112	51
6	150	11-1/8	283	6-1/4	159	5-3/16	132	262	119
8	200	13-7/8	352	8-1/8	206	6-13/16	173	488	221
10	250	17-1/8	435	9-3/4	248	8-1/2	216	917	416
12	300	20-1/2	521	12	305	10-1/8	257	1425	646
14	350	22-3/4	578	14	356	11-1/2	292	245	928
16	400	25-1/4	641	15-1/8	384	12-13/16	325	2600	1179
18	450	27-3/4	705	18-7/16	468	13-3/4	349	3883	1761
20	500	29-3/4	756	21	533	14-3/4	348	5700	2580
24	600	35-1/2	902	22	559	15-1/8	384	7150	3236

*Minimum companion flange bore.
Available with thru-hole bolting or threaded bolt holes.

Sizes 30" and larger fit **Series A** flanges.

Seat Material	Operating Temperature**	
	°F	°C
Buna-N	-20 to 250	-29 to 121
Viton	-20 to 400	-29 to 204
EPDM	-40 to 300	-40 to 149

**Subject to limitations of body material.

Applicable Standards
• Design ASME B16.5
• Design ASME B16.34
• Testing API 598
• Conforms to API 594 & 6D
• MSS SP – 6
• MSS SP – 25
• MSS SP – 55

FLOW COEFFICIENTS

Size	2"	2½"	3"	4"	5"	6"
C_v	48	98	170	290	495	720
Size	**8"**	**10"**	**12"**	**14"**	**16"**	**18"**
C_v	1800	2600	4300	5500	7200	9400
Size	**20"**	**24"**				
C_v	12600	19000				

KECKLEY COMPANY • 3400 Cleveland Street • Skokie, Illinois 60076 1-800-KECKLEY

KECKLEY

TECHNICAL DATA
DIMENSIONS AND WEIGHTS

Style DL

Retainerless Wafer Lug Body
Double Disc Check Valve, 150 lb.
Duplex (ASTM A 351, Grade CD4MCu)

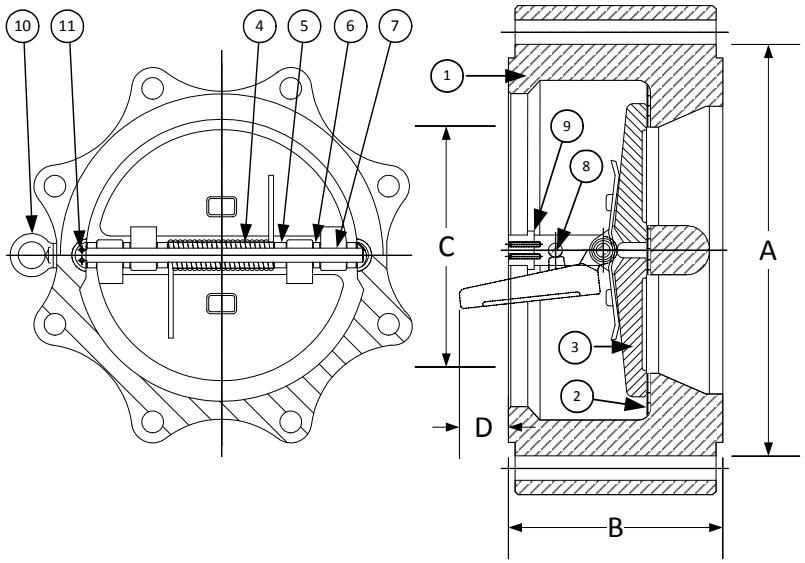

PARTS LIST		
ITEM	DESCRIPTION	MATERIAL
1	Body	Duplex (ASTM A 351, Grade CD4MCu)
2	Seat	Viton O-Ring
3	Disc	Duplex (ASTM A 351, Grade CD4MCu)
4	Spring	Inconel X-750
5	Spring Plate	Stainless Steel (ASTM A 182, Grade F-316)
6	Thrust Washer	Stainless Steel (ASTM A 182, Grade F-316)
7	Hinge Pin	Stainless Steel (ASTM A 182, Grade F-316)
8	Stop Pin	Stainless Steel (ASTM A 182, Grade F-316)
9	Locating Piece	Stainless Steel (ASTM A 182, Grade F-316)
10	Lifting Lug	Carbon Steel
11	Screw	Stainless Steel (316)

Above "Standard" Product Number – **DL2R-DP-DP4IX**
Other Options - Reference C2 for available materials.

SIZE		DIMENSIONS						WEIGHTS	
		A		B		C*			
in	mm	in	mm	in	mm	in	mm	lbs	kgs
2	50	4-1/8	105	2-3/8	60	1-15/16	49	18	8
2-1/2	65	4-7/8	124	2-5/8	67	2-11/32	60	22	10
3	80	5-3/8	137	2-7/8	73	2-29/32	74	30	14
4	100	6-7/8	175	2-7/8	73	3-53/64	97	44	20
5	125	7-3/4	197	3-3/8	86	4-13/16	122	51	23
6	150	8-3/4	222	3-7/8	98	5-49/64	146	84	38
8	200	11	279	5	127	7-1/2	191	91	41
10	250	13-3/8	340	5-3/4	146	9-7/16	240	156	71
12	300	16-1/8	410	7-1/8	181	11-1/4	286	252	114
14	350	17-3/4	441	7-1/4	184	12-5/8	321	291	132
16	400	20-1/4	514	7-1/2	191	14-11/16	373	464	210
18	450	21-5/8	549	8	203	16-9/16	421	431	195
20	500	23-7/8	606	8-5/8	219	18-7/16	468	501	227
24	600	28-1/4	718	8-3/4	222	21-5/8	549	682	309
30	750	34-3/4	883	12	305	28-7/16	722	1321	599
36	900	41-1/4	1048	14-1/2	368	34-3/8	873	1898	861
42	1050	48	1219	17	432	40-9/16	1030	3236	1468
48	1200	54-1/2	1384	20-5/8	524	44-3/16	1122	4899	2222

*Minimum companion flange bore.

Available with thru-hole bolting or threaded bolt holes.

Seat Material	Operating Temperature**	
	°F	°C
Buna-N	-20 to 250	-29 to 121
Viton	-20 to 400	-29 to 204
EPDM	-40 to 300	-40 to 149

**Subject to limitations of body material.

Applicable Standards
• Design ASME B16.5
• Design ASME B16.34
• Testing API 598
• Conforms to API 594 & 6D
• MSS SP – 6
• MSS SP – 25
• MSS SP – 55

FLOW COEFFICIENTS

Size	2"	2-1/2"	3"	4"	5"	6"
C_v	48	98	170	290	495	720
Size	**8"**	**10"**	**12"**	**14"**	**16"**	**18"**
C_v	1800	2600	4300	5500	7200	9400
Size	**20"**	**24"**	**30"**	**36"**	**42"**	**48"**
C_v	12600	19000	37500	60000	89000	124000

KECKLEY

TECHNICAL DATA
DIMENSIONS AND WEIGHTS

Style DL

Retainerless Wafer Lug Body
Double Disc Check Valve, 300 lb.
Duplex (ASTM A 351, Grade CD4MCu)

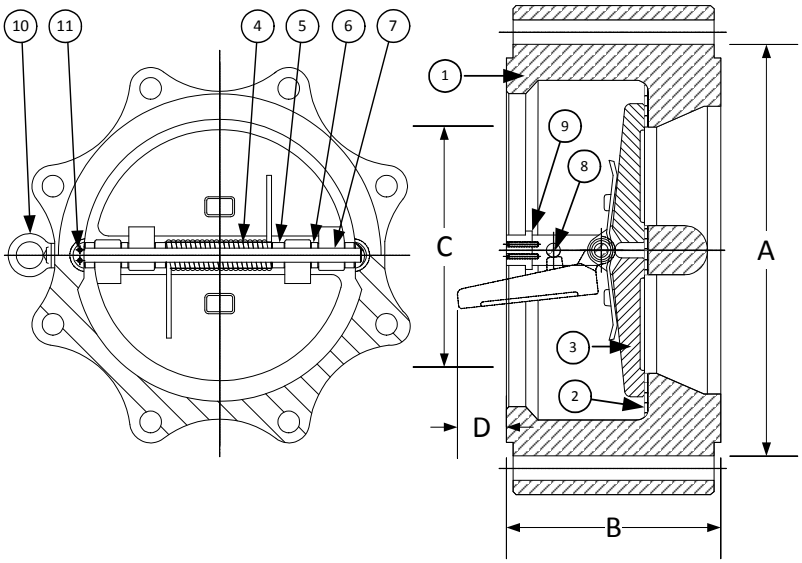

PARTS LIST		
ITEM	DESCRIPTION	MATERIAL
1	Body	Duplex (ASTM A 351, Grade CD4MCu)
2	Seat	Viton O-Ring
3	Disc	Duplex (ASTM A 351, Grade CD4MCu)
4	Spring	Inconel X-750
5	Spring Plate	Stainless Steel (ASTM A 182, Grade F-316)
6	Thrust Washer	Stainless Steel (ASTM A 182, Grade F-316)
7	Hinge Pin	Stainless Steel (ASTM A 182, Grade F-316)
8	Stop Pin	Stainless Steel (ASTM A 182, Grade F-316)
9	Locating Piece	Stainless Steel (ASTM A 182, Grade F-316)
10	Lifting Lug	Carbon Steel
11	Screw	Stainless Steel (316)

Above "Standard" Product Number – **DL4R-DP-DP4IX**
Other Options - Reference C2 for available materials.

SIZE		DIMENSIONS						WEIGHTS	
		A		B		C*			
in	mm	in	mm	in	mm	in	mm	lbs	kgs
2	50	4-3/8	111	2-3/8	60	1-15/16	49	18	8
2-1/2	65	5-1/8	130	2-5/8	67	2-11/32	60	22	10
3	80	5-7/8	149	2-7/8	73	2-29/32	74	30	14
4	100	7-1/8	181	2-7/8	73	3-53/64	97	44	20
5	125	8-1/2	216	3-3/8	86	4-13/16	122	51	23
6	150	9-7/8	251	3-7/8	98	5-49/64	146	84	38
8	200	12-1/8	308	5	127	7-5/8	194	163	74
10	250	14-1/4	362	5-3/4	146	9-9/16	243	270	123
12	300	16-5/8	422	7-1/8	181	11-1/4	286	361	164
14	350	19-1/8	486	8-3/4	222	12-7/16	316	543	246
16	400	21-1/4	540	9-1/8	232	14-1/2	368	792	359
18	450	23-1/2	597	10-3/8	264	16-3/8	416	790	358
20	500	25-3/4	654	11-1/2	292	18-1/16	459	780	354
24	600	30-1/2	775	12-1/2	318	20-11/16	525	1011	459
30	750	37-1/2	953	14-1/2	368	27-5/8	702	1974	895
36	900	44	1118	19	483	33-1/2	851	3926	1781
42	1050	45-7/8	1165	22-3/8	568	39-1/2	1003	4830	2191
48	1200	52-1/2	1334	24-3/4	629	42-1/4	1073	6653	3018

*Minimum companion flange bore.

Available with thru-hole bolting or threaded bolt holes.

Seat Material	Operating Temperature**	
	°F	°C
Buna-N	-20 to 250	-29 to 121
Viton	-20 to 400	-29 to 204
EPDM	-40 to 300	-40 to 149

**Subject to limitations of body material.

Applicable Standards
• Design ASME B16.5
• Design ASME B16.34
• Testing API 598
• Conforms to API 594 & 6D
• MSS SP – 6
• MSS SP – 25
• MSS SP – 55

FLOW COEFFICIENTS

Size	2"	2-1/2"	3"	4"	5"	6"
C_v	48	98	170	290	495	720
Size	**8"**	**10"**	**12"**	**14"**	**16"**	**18"**
C_v	1800	2600	4300	5500	7200	9400
Size	**20"**	**24"**	**30"**	**36"**	**42"**	**48"**
C_v	12600	19000	37500	60000	89000	124000

KECKLEY COMPANY • 3400 Cleveland Street • Skokie, Illinois 60076 1-800-KECKLEY

KECKLEY

TECHNICAL DATA
DIMENSIONS AND WEIGHTS

Style DL

Retainerless Wafer Lug Body
Double Disc Check Valve, 600 lb.
Duplex (ASTM A 351, Grade CD4MCu)

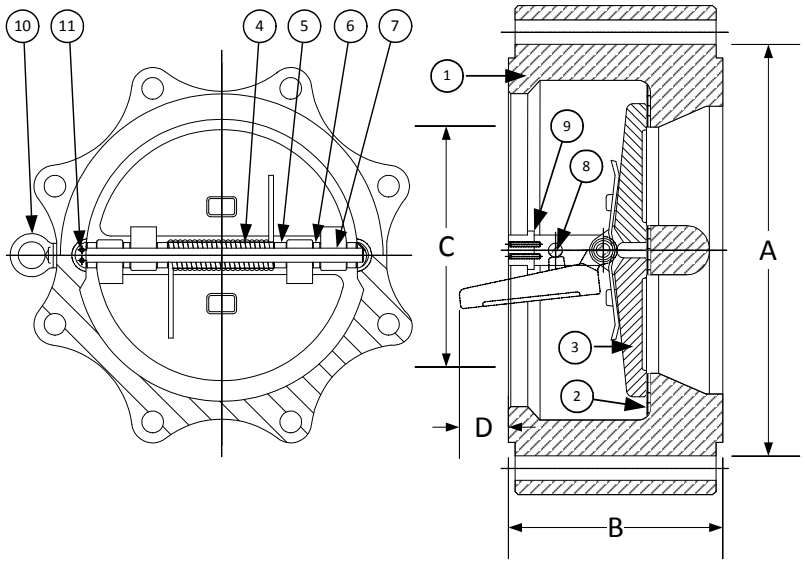

PARTS LIST		
ITEM	DESCRIPTION	MATERIAL
1	Body	Duplex (ASTM A 351, Grade CD4MCu)
2	Seat	Viton O-Ring
3	Disc	Duplex (ASTM A 351, Grade CD4MCu)
4	Spring	Inconel X-750
5	Spring Plate	Stainless Steel (ASTM A 182, Grade F-316)
6	Thrust Washer	Stainless Steel (ASTM A 182, Grade F-316)
7	Hinge Pin	Stainless Steel (ASTM A 182, Grade F-316)
8	Stop Pin	Stainless Steel (ASTM A 182, Grade F-316)
9	Locating Piece	Stainless Steel (ASTM A 182, Grade F-316)
10	Lifting Lug	Carbon Steel
11	Screw	Stainless Steel (316)

Above "Standard" Product Number – **DL5R-DP-DP4IX**
Other Options - Reference C2 for available materials.

SIZE		DIMENSIONS						WEIGHTS	
		A		B		C*			
in	mm	in	mm	in	mm	in	mm	lbs	kgs
2	50	4-3/8	111	2-3/8	60	1-3/16	30	18	8
2-1/2	65	5-1/8	130	2-5/8	67	2-1/8	54	27	12
3	80	5-7/8	149	2-7/8	73	2-3/16	56	27	12
4	100	7-5/8	194	3-1/8	79	3-5/16	84	51	23
5	125	9-1/2	241	4-1/8	105	4-1/2	114	97	44
6	150	10-1/2	267	5-3/8	137	4-3/4	121	151	68
8	200	12-5/8	321	6-1/2	165	6-25/32	172	261	118
10	250	15-3/4	400	8-3/8	213	8-1/2	216	460	209
12	300	18	457	9	229	10-9/16	268	587	266
14	350	19-3/8	492	10-3/4	273	11-15/16	303	817	371
16	400	22-1/4	565	12	305	13-1/2	343	1058	480
18	450	24-1/8	613	14-1/4	362	13-3/4	349	1011	459
20	500	26-7/8	683	14-1/2	368	16-15/16	430	1279	580
24	600	31-1/8	791	17-1/4	438	20-1/2	521	1851	840
30	750	38-1/4	972	19-7/8	505	26-1/2	673	2987	1355
36	900	44	1118	25	635	30-3/8	772	5364	2433
42	1050	48	1219	27-5/8	702	37-7/16	951	7048	3197

*Minimum companion flange bore.

Available with thru-hole bolting or threaded bolt holes.

Seat Material	Operating Temperature**	
	°F	°C
Buna-N	-20 to 250	-29 to 121
Viton	-20 to 400	-29 to 204
EPDM	-40 to 300	-40 to 149

**Subject to limitations of body material.

Applicable Standards
• Design ASME B16.5
• Design ASME B16.34
• Testing API 598
• Conforms to API 594 & 6D
• MSS SP – 6
• MSS SP – 25
• MSS SP – 55

FLOW COEFFICIENTS

Size	2"	2-1/2"	3"	4"	5"	6"
C_v	48	98	170	290	495	720
Size	**8"**	**10"**	**12"**	**14"**	**16"**	**18"**
C_v	1800	2600	4300	5500	7200	9400
Size	**20"**	**24"**	**30"**	**36"**	**42"**	
C_v	12600	19000	37500	60000	89000	

KECKLEY

TECHNICAL DATA
DIMENSIONS AND WEIGHTS

Style DL

Retainerless Wafer Lug Body
Double Disc Check Valve, 900 lb.
Duplex (ASTM A 351, Grade CD4MCu)

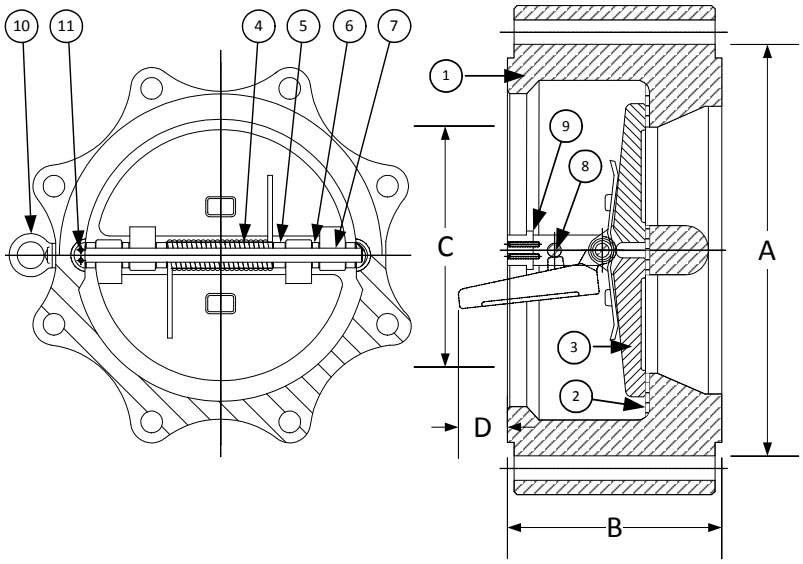

PARTS LIST		
ITEM	DESCRIPTION	MATERIAL
1	Body	Duplex (ASTM A 351, Grade CD4MCu)
2	Seat	Viton O-Ring
3	Disc	Duplex (ASTM A 351, Grade CD4MCu)
4	Spring	Inconel X-750
5	Spring Plate	Stainless Steel (ASTM A 182, Grade F-316)
6	Thrust Washer	Stainless Steel (ASTM A 182, Grade F-316)
7	Hinge Pin	Stainless Steel (ASTM A 182, Grade F-316)
8	Stop Pin	Stainless Steel (ASTM A 182, Grade F-316)
9	Locating Piece	Stainless Steel (ASTM A 182, Grade F-316)
10	Lifting Lug	Carbon Steel
11	Screw	Stainless Steel (316)

Above "Standard" Product Number – **DL6R-DP-DP4IX**
Other Options - Reference C2 for available materials.

SIZE		DIMENSIONS						WEIGHTS	
		A		B		C*			
in	mm	in	mm	in	mm	in	mm	lbs	kgs
2	50	5-5/8	143	2-3/4	70	-	-	26	12
2-1/2	65	6-1/2	165	3-1/4	83	2	51	40	18
3	80	6-5/8	168	3-1/4	83	2-1/8	54	44	20
4	100	8-1/8	206	4	102	3-1/16	78	68	31
6	150	11-3/8	289	6-1/4	159	3-5/8	92	240	109
8	200	14-1/8	359	8-1/8	206	6-1/2	165	443	201
10	250	17-1/8	435	9-1/2	241	8-3/16	208	661	300
12	300	19-5/8	498	11-1/2	292	9-3/4	248	981	445
14	350	20-1/2	521	14	356	8-15/16	227	1241	563
16	400	22-5/8	575	15-1/8	384	11-7/32	285	2074	941
18	450	25-1/8	638	17-3/4	451	13-15/16	354	1418	643
20	500	27-1/2	699	17-3/4	451	17-1/16	433	1892	858
24	600	33	838	19-1/2	495	20-15/32	520	2786	1264

*Minimum companion flange bore.

Available with thru-hole bolting or threaded bolt holes.

Seat Material	Operating Temperature**	
	°F	°C
Buna-N	-20 to 250	-29 to 121
Viton	-20 to 400	-29 to 204
EPDM	-40 to 300	-40 to 149

**Subject to limitations of body material.

Applicable Standards
• Design ASME B16.5
• Design ASME B16.34
• Testing API 598
• Conforms to API 594 & 6D
• MSS SP – 6
• MSS SP – 25
• MSS SP – 55

FLOW COEFFICIENTS

Size	2"	2-1/2"	3"	4"	5"	6"
C_v	48	98	170	290	495	720
Size	8"	10"	12"	14"	16"	18"
C_v	1800	2600	4300	5500	7200	9400
Size	20"	24"				
C_v	12600	19000				

KECKLEY COMPANY • 3400 Cleveland Street • Skokie, Illinois 60076 1-800-KECKLEY

KECKLEY

TECHNICAL DATA
DIMENSIONS AND WEIGHTS

Style DL

Retainerless Wafer Lug Body
Double Disc Check Valve, 1500 lb.
Duplex (ASTM A 351, Grade CD4MCu)

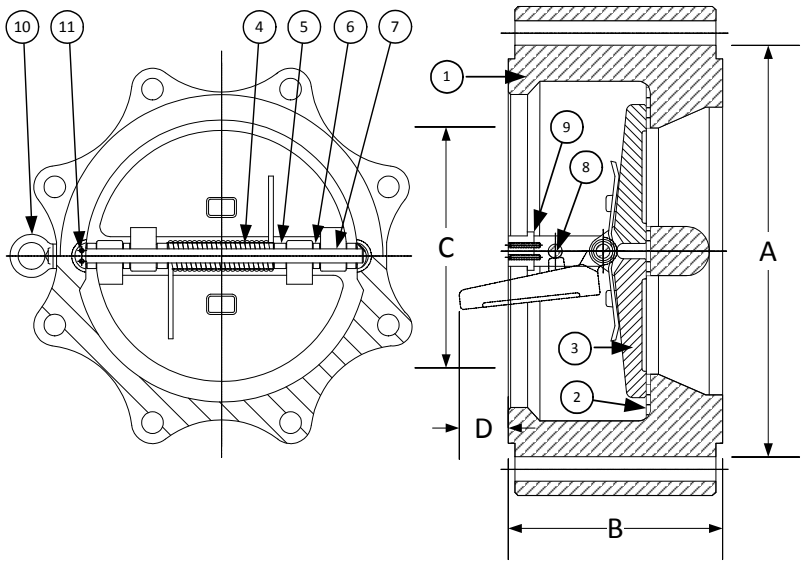

PARTS LIST		
ITEM	DESCRIPTION	MATERIAL
1	Body	Duplex (ASTM A 351, Grade CD4MCu)
2	Seat	Viton O-Ring
3	Disc	Duplex (ASTM A 351, Grade CD4MCu)
4	Spring	Inconel X-750
5	Spring Plate	Stainless Steel (ASTM A 182, Grade F-316)
6	Thrust Washer	Stainless Steel (ASTM A 182, Grade F-316)
7	Hinge Pin	Stainless Steel (ASTM A 182, Grade F-316)
8	Stop Pin	Stainless Steel (ASTM A 182, Grade F-316)
9	Locating Piece	Stainless Steel (ASTM A 182, Grade F-316)
10	Lifting Lug	Carbon Steel
11	Screw	Stainless Steel (316)

Above "Standard" Product Number – **DL7R-DP-DP4IX**
Other Options - Reference C2 for available materials.

SIZE		DIMENSIONS						WEIGHTS	
		A		B		C*			
in	mm	in	mm	in	mm	in	mm	lbs	kgs
2	50	5-5/8	143	2-3/4	70	1-11/16	43	37	17
3	80	6-7/8	175	3-1/4	83	2-5/8	67	70	32
4	100	8-1/4	210	4	102	3-7/16	87	112	51
6	150	11-1/8	283	6-1/4	159	5-3/16	132	262	119
8	200	13-7/8	352	8-1/8	206	6-13/16	173	488	221
10	250	17-1/8	435	9-3/4	248	8-1/2	216	917	416
12	300	20-1/2	521	12	305	10-1/8	257	1425	646
14	350	22-3/4	578	14	356	11-1/2	292	245	928
16	400	25-1/4	641	15-1/8	384	12-13/16	325	2600	1179
18	450	27-3/4	705	18-7/16	468	13-3/4	349	3883	1761
20	500	29-3/4	756	21	533	14-3/4	348	5700	2580
24	600	35-1/2	902	22	559	15-1/8	384	7150	3236

*Minimum companion flange bore.
Available with thru-hole bolting or threaded bolt holes.

Sizes 30" and larger fit **Series A** flanges.

Seat Material	Operating Temperature**	
	°F	°C
Buna-N	-20 to 250	-29 to 121
Viton	-20 to 400	-29 to 204
EPDM	-40 to 300	-40 to 149

**Subject to limitations of body material.

Applicable Standards
• Design ASME B16.5
• Design ASME B16.34
• Testing API 598
• Conforms to API 594 & 6D
• MSS SP – 6
• MSS SP – 25
• MSS SP – 55

FLOW COEFFICIENTS

Size	2"	2½"	3"	4"	5"	6"
C_v	48	98	170	290	495	720
Size	8"	10"	12"	14"	16"	18"
C_v	1800	2600	4300	5500	7200	9400
Size	20"	24"				
C_v	12600	19000				

KECKLEY

TECHNICAL DATA
DIMENSIONS AND WEIGHTS

Style DF

Retainerless Wafer Double Flange Body
Double Disc Check Valve, 150 lb.
Low Carbon Steel (ASTM A 352, Grade LCB)

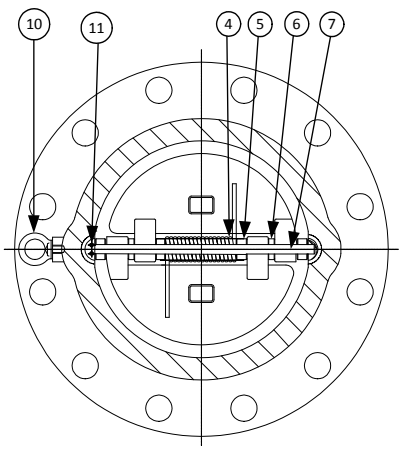

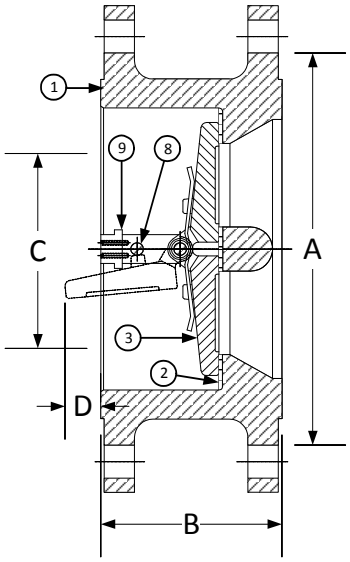

PARTS LIST		
ITEM	DESCRIPTION	MATERIAL
1	Body	Low Carbon Steel (ASTM A 352, Grade LCB)
2	Seat	Buna-N O-Ring
3	Disc	Low Carbon Steel (ASTM A 352, Grade LCB)
4	Spring	Inconel X-750
5	Spring Plate	Stainless Steel (ASTM A 182, Grade F-316)
6	Thrust Washer	Stainless Steel (ASTM A 182, Grade F-316)
7	Hinge Pin	Stainless Steel (ASTM A 182, Grade F-316)
8	Stop Pin	Stainless Steel (ASTM A 182, Grade F-316)
9	Locating Piece	Stainless Steel (ASTM A 182, Grade F-316)
10	Lifting Lug	Carbon Steel
11	Screw	Stainless Steel (316)

Above "Standard" Product Number – **DF2R-LC-LC1IX**
Other Options - Reference C2 for available materials.

SIZE		DIMENSIONS						WEIGHTS	
		A		B		C*			
in	mm	in	mm	in	mm	in	mm	lbs	kgs
8	200	11	279	5	127	7-5/8	194	93	42
10	250	13-3/8	340	5-3/4	146	9-9/16	243	189	86
12	300	16-1/8	410	7-1/8	181	11-3/8	289	308	140
14	350	17-3/4	451	7-1/4	184	12-1/2	318	352	160
16	400	20-1/4	514	7-1/2	191	15	381	496	225
18	450	21-5/8	549	8	203	16-7/8	428	551	250
20	500	23-7/8	606	8-5/8	219	8-7/8	480	661	300
24	600	28-1/4	718	8-3/4	222	22-5/8	575	860	389
30	750	34-3/4	883	12	305	29-1/4	743	1512	687
36	900	41-1/4	1048	14-1/2	368	35	889	2525	1145
42	1050	48	1219	17	432	41	1041	4163	1888
48	1200	54-1/2	1384	20-5/8	524	47	1194	5880	2667

*Minimum companion flange bore.
Available with thru-hole bolting or threaded bolt holes.

Sizes 30" and larger fit **Series A** flanges.

Seat Material	Operating Temperature**	
	°F	°C
Buna-N	-20 to 250	-29 to 121
Viton	-20 to 400	-29 to 204
EPDM	-40 to 300	-40 to 149

**Subject to limitations of body material.

Applicable Standards
• Design ASME B16.5
• Design ASME B16.34
• Testing API 598
• Conforms to API 594 & 6D
• MSS SP – 6
• MSS SP – 25
• MSS SP – 55

FLOW COEFFICIENTS

Size	8"	10"	12"	14"	16"	18"
C_v	1800	2600	4300	5500	7200	9400
Size	**20"**	**24"**	**30"**	**36"**	**42"**	**48"**
C_v	12600	19000	37500	60000	89000	124000

KECKLEY COMPANY • 3400 Cleveland Street • Skokie, Illinois 60076 1-800-KECKLEY

KECKLEY

TECHNICAL DATA
DIMENSIONS AND WEIGHTS

Style DF

Retainerless Wafer Double Flange Body
Double Disc Check Valve, 300 lb.
Low Carbon Steel (ASTM A 352, Grade LCB)

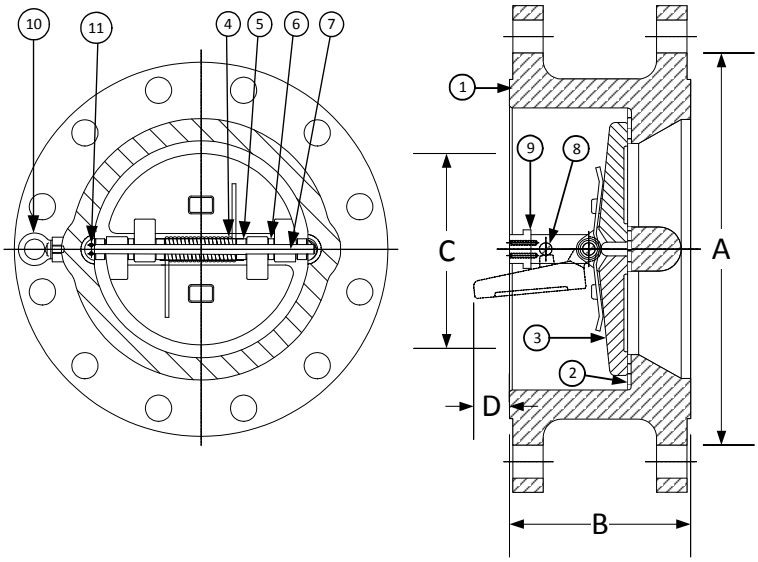

PARTS LIST		
ITEM	DESCRIPTION	MATERIAL
1	Body	Low Carbon Steel (ASTM A 352, Grade LCB)
2	Seat	Buna-N O-Ring
3	Disc	Low Carbon Steel (ASTM A 352, Grade LCB)
4	Spring	Inconel X-750
5	Spring Plate	Stainless Steel (ASTM A 182, Grade F-316)
6	Thrust Washer	Stainless Steel (ASTM A 182, Grade F-316)
7	Hinge Pin	Stainless Steel (ASTM A 182, Grade F-316)
8	Stop Pin	Stainless Steel (ASTM A 182, Grade F-316)
9	Locating Piece	Stainless Steel (ASTM A 182, Grade F-316)
10	Lifting Lug	Carbon Steel
11	Screw	Stainless Steel (316)

Above "Standard" Product Number – **DF4R-LC-LC1IX**
Other Options - Reference C2 for available materials.

SIZE		DIMENSIONS						WEIGHTS	
		A		B		C*			
in	mm	in	mm	in	mm	in	mm	lbs	kgs
8	200	12-1/8	308	5	127	7-1/2	191	151	68
10	250	14-1/4	362	5-3/4	146	9-7/16	240	251	114
12	300	16-5/8	422	7-1/8	181	11-3/8	289	465	211
14	350	19-1/8	486	8-3/4	222	12-1/2	318	593	269
16	400	21-1/4	540	9-1/8	232	14-3/8	365	771	350
18	450	23-1/2	597	10-3/8	264	16-1/8	409	970	440
20	500	25-3/4	654	11-1/2	292	17-7/8	454	1078	488
24	600	30-1/2	775	12-1/2	318	22-1/8	562	1516	686
30	750	37-1/2	953	14-1/2	368	28-3/4	730	3100	1406
36	900	44	1118	19	483	35	864	4650	2109
42	1050	45-7/8	1289	22-3/8	568	41	1041	8670	3932
48	1200	52-1/8	1492	24-3/4	629	47	1193	9950	4513

*Minimum companion flange bore.
Available with thru-hole bolting or threaded bolt holes.

Sizes 30" and larger fit **Series A** flanges.

Seat Material	Operating Temperature**	
	°F	°C
Buna-N	-20 to 250	-29 to 121
Viton	-20 to 400	-29 to 204
EPDM	-40 to 300	-40 to 149

**Subject to limitations of body material.

Applicable Standards
• Design ASME B16.5
• Design ASME B16.34
• Testing API 598
• Conforms to API 594 & 6D
• MSS SP – 6
• MSS SP – 25
• MSS SP – 55

FLOW COEFFICIENTS

Size	8"	10"	12"	14"	16"	18"
C_v	1800	2600	4300	5500	7200	9400
Size	20"	24"	30"	36"	42"	48"
C_v	12600	19000	37500	60000	89000	124000

KECKLEY

TECHNICAL DATA
DIMENSIONS AND WEIGHTS

Style DF

Retainerless Wafer Double Flange Body
Double Disc Check Valve, 600 lb.
Low Carbon Steel (ASTM A 352, Grade LCB)

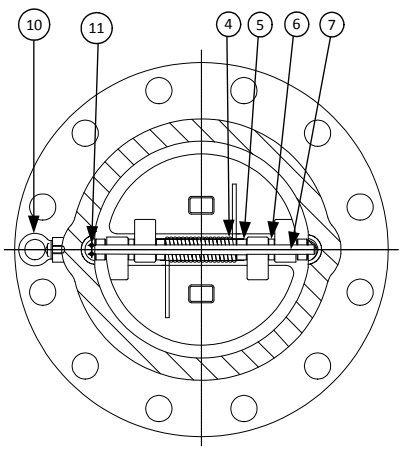

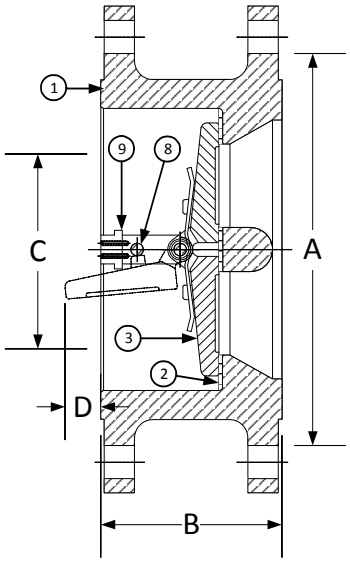

PARTS LIST		
ITEM	DESCRIPTION	MATERIAL
1	Body	Low Carbon Steel (ASTM A 352, Grade LCB)
2	Seat	Buna-N O-Ring
3	Disc	Low Carbon Steel (ASTM A 352, Grade LCB)
4	Spring	Inconel X-750
5	Spring Plate	Stainless Steel (ASTM A 182, Grade F-316)
6	Thrust Washer	Stainless Steel (ASTM A 182, Grade F-316)
7	Hinge Pin	Stainless Steel (ASTM A 182, Grade F-316)
8	Stop Pin	Stainless Steel (ASTM A 182, Grade F-316)
9	Locating Piece	Stainless Steel (ASTM A 182, Grade F-316)
10	Lifting Lug	Carbon Steel
11	Screw	Stainless Steel (316)

Above "Standard" Product Number – **DF5R-LC-LC1IX**
Other Options - Reference C2 for available materials.

SIZE		DIMENSIONS						WEIGHTS	
		A		B		C*			
in	mm	in	mm	in	mm	in	mm	lbs	kgs
12	300	18	457	9	229	11-3/8	289	612	277
14	350	19-3/8	492	10-3/4	273	12-1/2	318	826	375
16	400	22-1/4	565	12	305	14-3/8	365	951	430
18	450	24-1/8	613	14-1/4	362	16-1/8	409	1433	650
20	500	26-7/8	683	14-1/2	368	18	457	1763	800
24	600	31-1/8	791	17-1/4	438	21-9/16	548	2755	1250
30	750	38-1/4	972	19-7/8	505	28-3/4	730	5070	2300
36	900	44-1/2	1130	25	635	33-3/4	857	7605	3450
42	1050	48	1219	27-37-64	701	39-1/2	1003	9985	4529
48	1200	-	-	31	787	36	914	12600	5715

*Minimum companion flange bore.
Available with thru-hole bolting or threaded bolt holes.

Sizes 30" and larger fit **Series A** flanges.

Seat Material	Operating Temperature**	
	°F	°C
Buna-N	-20 to 250	-29 to 121
Viton	-20 to 400	-29 to 204
EPDM	-40 to 300	-40 to 149

**Subject to limitations of body material.

Applicable Standards
• Design ASME B16.5
• Design ASME B16.34
• Testing API 598
• Conforms to API 594 & 6D
• MSS SP – 6
• MSS SP – 25
• MSS SP – 55

FLOW COEFFICIENTS

Size	12"	14"	16"	18"	20"	24"
C_v	4300	5500	7200	9400	12600	19000
Size	30"	36"	42"	48"		
C_v	37500	60000	89000	12400		

KECKLEY

TECHNICAL DATA
DIMENSIONS AND WEIGHTS

Style DF

Retainerless Wafer Double Flange Body
Double Disc Check Valve, 900 lb.
Low Carbon Steel (ASTM A 352, Grade LCB)

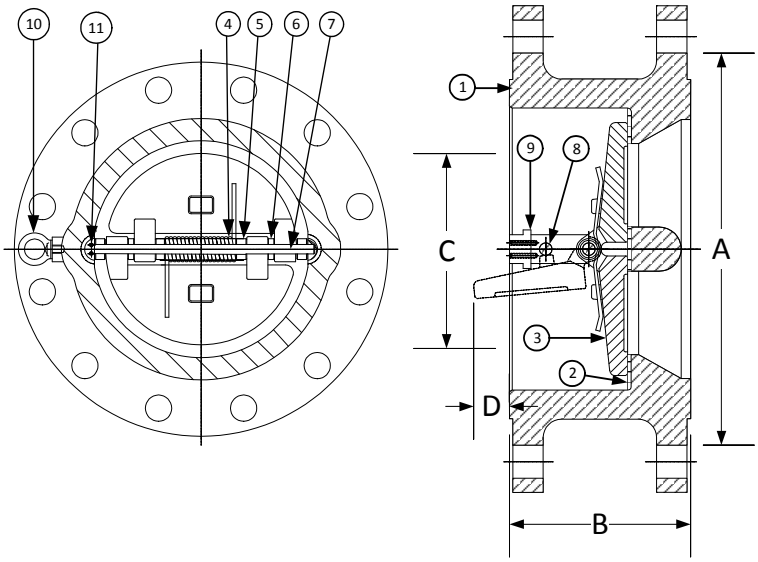

PARTS LIST		
ITEM	DESCRIPTION	MATERIAL
1	Body	Low Carbon Steel (ASTM A 352, Grade LCB)
2	Seat	Buna-N O-Ring
3	Disc	Low Carbon Steel (ASTM A 352, Grade LCB)
4	Spring	Inconel X-750
5	Spring Plate	Stainless Steel (ASTM A 182, Grade F-316)
6	Thrust Washer	Stainless Steel (ASTM A 182, Grade F-316)
7	Hinge Pin	Stainless Steel (ASTM A 182, Grade F-316)
8	Stop Pin	Stainless Steel (ASTM A 182, Grade F-316)
9	Locating Piece	Stainless Steel (ASTM A 182, Grade F-316)
10	Lifting Lug	Carbon Steel
11	Screw	Stainless Steel (316)

Above "Standard" Product Number – **DF6R-LC-LC1IX**
Other Options - Reference C2 for available materials.

SIZE		DIMENSIONS						WEIGHTS	
		A		B		C*			
in	mm	in	mm	in	mm	in	mm	lbs	kgs
12	300	19-5/8	498	11-1/2	292	10-1/8	257	770	349
14	350	20-1/2	521	14	356	11-1/2	292	1240	561
16	400	22-5/8	575	15-1/8	384	12-7/8	327	1653	750
18	450	25-1/8	638	17-3/4	451	14-1/2	368	2314	1050
20	500	27-1/2	699	17-3/4	451	18	457	2866	1300
24	600	33	838	19-1/2	495	21-1/2	546	4175	1893

*Minimum companion flange bore.
Available with thru-hole bolting or threaded bolt holes.

Sizes 30" and larger fit **Series A** flanges.

Seat Material	Operating Temperature**	
	°F	°C
Buna-N	-20 to 250	-29 to 121
Viton	-20 to 400	-29 to 204
EPDM	-40 to 300	-40 to 149

**Subject to limitations of body material.

Applicable Standards
• Design ASME B16.5
• Design ASME B16.34
• Testing API 598
• Conforms to API 594 & 6D
• MSS SP – 6
• MSS SP – 25
• MSS SP – 55

FLOW COEFFICIENTS

Size	12"	14"	16"	18"	20"	24"
C_v	4300	5500	7200	9400	12600	19000

KECKLEY

TECHNICAL DATA
DIMENSIONS AND WEIGHTS

Style DF

Retainerless Wafer Double Flange Body
Double Disc Check Valve, 150 lb.
Alloy 20 (ASTM A 351, Grade CN7M)

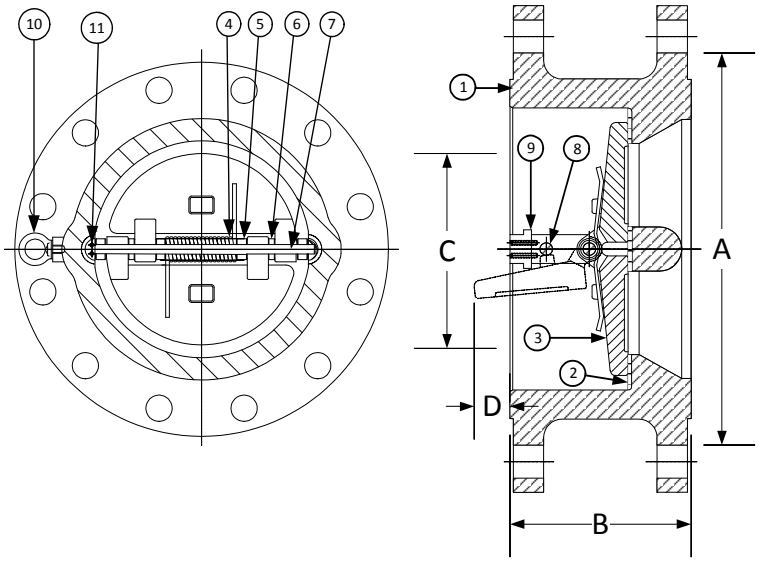

PARTS LIST		
ITEM	DESCRIPTION	MATERIAL
1	Body	Alloy 20 (ASTM A 351, Grade CN7M)
2	Seat	Viton O-Ring
3	Disc	Alloy 20 (ASTM A 351, Grade CN7M)
4	Spring	Inconel X-750
5	Spring Plate	Stainless Steel (ASTM A 182, Grade F-316)
6	Thrust Washer	Stainless Steel (ASTM A 182, Grade F-316)
7	Hinge Pin	Stainless Steel (ASTM A 182, Grade F-316)
8	Stop Pin	Stainless Steel (ASTM A 182, Grade F-316)
9	Locating Piece	Stainless Steel (ASTM A 182, Grade F-316)
10	Lifting Lug	Carbon Steel
11	Screw	Stainless Steel (316)

Above "Standard" Product Number – **DF2R-A2-A24IX**
Other Options - Reference C2 for available materials.

SIZE		DIMENSIONS						WEIGHTS	
		A		B		C*			
in	mm	in	mm	in	mm	in	mm	lbs	kgs
8	200	11	279	5	127	7-5/8	194	93	42
10	250	13-3/8	340	5-3/4	146	9-9/16	243	189	86
12	300	16-1/8	410	7-1/8	181	11-3/8	289	308	140
14	350	17-3/4	451	7-1/4	184	12-1/2	318	352	160
16	400	20-1/4	514	7-1/2	191	15	381	496	225
18	450	21-5/8	549	8	203	16-7/8	428	551	250
20	500	23-7/8	606	8-5/8	219	8-7/8	480	661	300
24	600	28-1/4	718	8-3/4	222	22-5/8	575	860	389
30	750	34-3/4	883	12	305	29-1/4	743	1512	687
36	900	41-1/4	1048	14-1/2	368	35	889	2525	1145
42	1050	48	1219	17	432	41	1041	4163	1888
48	1200	54-1/2	1384	20-5/8	524	47	1194	5880	2667

*Minimum companion flange bore.
Available with thru-hole bolting or threaded bolt holes.

Sizes 30" and larger fit **Series A** flanges.

Seat Material	Operating Temperature**	
	°F	°C
Buna-N	-20 to 250	-29 to 121
Viton	-20 to 400	-29 to 204
EPDM	-40 to 300	-40 to 149

**Subject to limitations of body material.

Applicable Standards
• Design ASME B16.5
• Design ASME B16.34
• Testing API 598
• Conforms to API 594 & 6D
• MSS SP – 6
• MSS SP – 25
• MSS SP – 55

FLOW COEFFICIENTS

Size	8"	10"	12"	14"	16"	18"
C_v	1800	2600	4300	5500	7200	9400
Size	**20"**	**24"**	**30"**	**36"**	**42"**	**48"**
C_v	12600	19000	37500	60000	89000	124000

KECKLEY COMPANY • 3400 Cleveland Street • Skokie, Illinois 60076 1-800-KECKLEY

KECKLEY

TECHNICAL DATA
DIMENSIONS AND WEIGHTS

Style DF

Retainerless Wafer Double Flange Body
Double Disc Check Valve, 300 lb.
Alloy 20 (ASTM A 351, Grade CN7M)

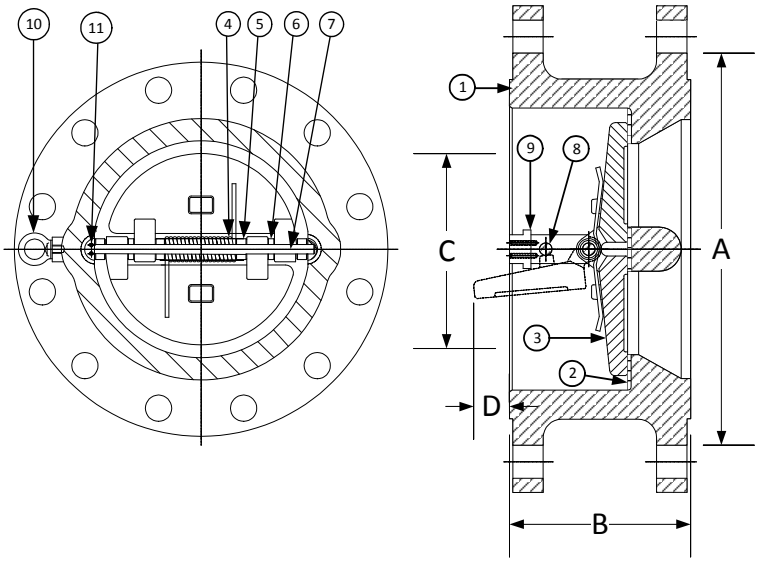

PARTS LIST		
ITEM	DESCRIPTION	MATERIAL
1	Body	Alloy 20 (ASTM A 351, Grade CN7M)
2	Seat	Viton O-Ring
3	Disc	Alloy 20 (ASTM A 351, Grade CN7M)
4	Spring	Inconel X-750
5	Spring Plate	Stainless Steel (ASTM A 182, Grade F-316)
6	Thrust Washer	Stainless Steel (ASTM A 182, Grade F-316)
7	Hinge Pin	Stainless Steel (ASTM A 182, Grade F-316)
8	Stop Pin	Stainless Steel (ASTM A 182, Grade F-316)
9	Locating Piece	Stainless Steel (ASTM A 182, Grade F-316)
10	Lifting Lug	Carbon Steel
11	Screw	Stainless Steel (316)

Above "Standard" Product Number – **DF4R-A2-A24IX**
Other Options - Reference C2 for available materials.

SIZE		DIMENSIONS						WEIGHTS	
		A		B		C*			
in	mm	in	mm	in	mm	in	mm	lbs	kgs
8	200	12-1/8	308	5	127	7-1/2	191	151	68
10	250	14-1/4	362	5-3/4	146	9-7/16	240	251	114
12	300	16-5/8	422	7-1/8	181	11-3/8	289	465	211
14	350	19-1/8	486	8-3/4	222	12-1/2	318	593	269
16	400	21-1/4	540	9-1/8	232	14-3/8	365	771	350
18	450	23-1/2	597	10-3/8	264	16-1/8	409	970	440
20	500	25-3/4	654	11-1/2	292	17-7/8	454	1078	488
24	600	30-1/2	775	12-1/2	318	22-1/8	562	1516	686
30	750	37-1/2	953	14-1/2	368	28-3/4	730	3100	1406
36	900	44	1118	19	483	35	864	4650	2109
42	1050	45-7/8	1289	22-3/8	568	41	1041	8670	3932
48	1200	52-1/8	1492	24-3/4	629	47	1193	9950	4513

*Minimum companion flange bore.
Available with thru-hole bolting or threaded bolt holes.

Sizes 30" and larger fit **Series A** flanges.

Seat Material	Operating Temperature**	
	°F	°C
Buna-N	-20 to 250	-29 to 121
Viton	-20 to 400	-29 to 204
EPDM	-40 to 300	-40 to 149

**Subject to limitations of body material.

Applicable Standards
• Design ASME B16.5
• Design ASME B16.34
• Testing API 598
• Conforms to API 594 & 6D
• MSS SP – 6
• MSS SP – 25
• MSS SP – 55

FLOW COEFFICIENTS

Size	8"	10"	12"	14"	16"	18"
C_v	1800	2600	4300	5500	7200	9400
Size	**20"**	**24"**	**30"**	**36"**	**42"**	**48"**
C_v	12600	19000	37500	60000	89000	124000

KECKLEY

TECHNICAL DATA
DIMENSIONS AND WEIGHTS

Style DF

Retainerless Wafer Double Flange Body Double Disc Check Valve, 600 lb. Alloy 20 (ASTM A 351, Grade CN7M)

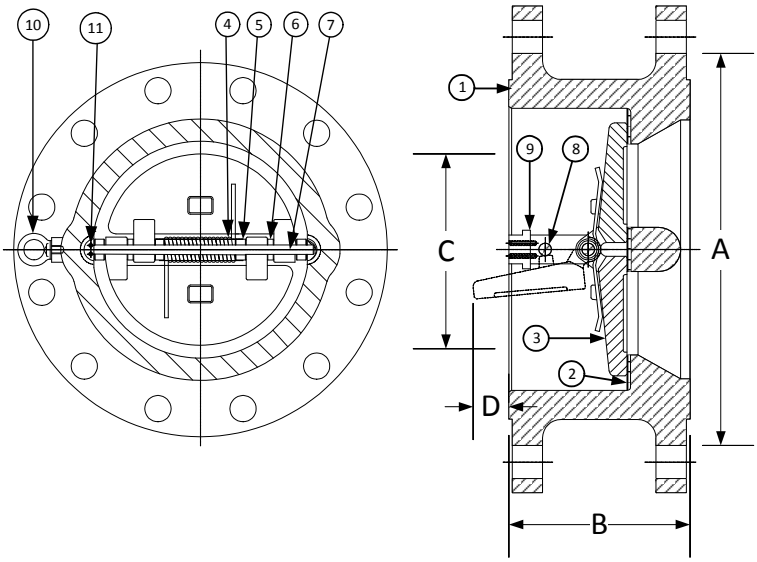

PARTS LIST		
ITEM	DESCRIPTION	MATERIAL
1	Body	Alloy 20 (ASTM A 351, Grade CN7M)
2	Seat	Viton O-Ring
3	Disc	Alloy 20 (ASTM A 351, Grade CN7M)
4	Spring	Inconel X-750
5	Spring Plate	Stainless Steel (ASTM A 182, Grade F-316)
6	Thrust Washer	Stainless Steel (ASTM A 182, Grade F-316)
7	Hinge Pin	Stainless Steel (ASTM A 182, Grade F-316)
8	Stop Pin	Stainless Steel (ASTM A 182, Grade F-316)
9	Locating Piece	Stainless Steel (ASTM A 182, Grade F-316)
10	Lifting Lug	Carbon Steel
11	Screw	Stainless Steel (316)

Above "Standard" Product Number – **DF5R-A2-A24IX**
Other Options - Reference C2 for available materials.

SIZE		DIMENSIONS						WEIGHTS	
		A		B		C*			
in	mm	in	mm	in	mm	in	mm	lbs	kgs
12	300	18	457	9	229	11-3/8	289	612	277
14	350	19-3/8	492	10-3/4	273	12-1/2	318	826	375
16	400	22-1/4	565	12	305	14-3/8	365	951	430
18	450	24-1/8	613	14-1/4	362	16-1/8	409	1433	650
20	500	26-7/8	683	14-1/2	368	18	457	1763	800
24	600	31-1/8	791	17-1/4	438	21-9/16	548	2755	1250
30	750	38-1/4	972	19-7/8	505	28-3/4	730	5070	2300
36	900	44-1/2	1130	25	635	33-3/4	857	7605	3450
42	1050	48	1219	27-37-64	701	39-1/2	1003	9985	4529
48	1200	-	-	31	787	36	914	12600	5715

*Minimum companion flange bore.
Available with thru-hole bolting or threaded bolt holes.

Sizes 30" and larger fit **Series A** flanges.

Seat Material	Operating Temperature**	
	°F	°C
Buna-N	-20 to 250	-29 to 121
Viton	-20 to 400	-29 to 204
EPDM	-40 to 300	-40 to 149

**Subject to limitations of body material.

Applicable Standards
• Design ASME B16.5
• Design ASME B16.34
• Testing API 598
• Conforms to API 594 & 6D
• MSS SP – 6
• MSS SP – 25
• MSS SP – 55

FLOW COEFFICIENTS

Size	12"	14"	16"	18"	20"	24"
C_v	4300	5500	7200	9400	12600	19000
Size	30"	36"	42"	48"		
C_v	37500	60000	89000	12400		

KECKLEY

TECHNICAL DATA
DIMENSIONS AND WEIGHTS

Style DF

Retainerless Wafer Double Flange Body
Double Disc Check Valve, 900 lb.
Alloy 20 (ASTM A 351, Grade CN7M)

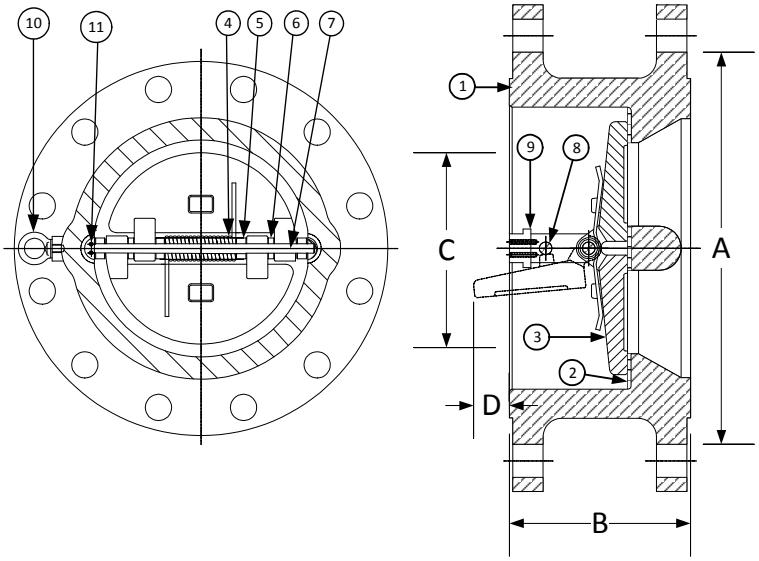

PARTS LIST		
ITEM	DESCRIPTION	MATERIAL
1	Body	Alloy 20 (ASTM A 351, Grade CN7M)
2	Seat	Viton O-Ring
3	Disc	Alloy 20 (ASTM A 351, Grade CN7M)
4	Spring	Inconel X-750
5	Spring Plate	Stainless Steel (ASTM A 182, Grade F-316)
6	Thrust Washer	Stainless Steel (ASTM A 182, Grade F-316)
7	Hinge Pin	Stainless Steel (ASTM A 182, Grade F-316)
8	Stop Pin	Stainless Steel (ASTM A 182, Grade F-316)
9	Locating Piece	Stainless Steel (ASTM A 182, Grade F-316)
10	Lifting Lug	Carbon Steel
11	Screw	Stainless Steel (316)

Above "Standard" Product Number – **DF6R-A2-A24IX**
Other Options - Reference C2 for available materials.

SIZE		DIMENSIONS						WEIGHTS	
		A		B		C*			
in	mm	in	mm	in	mm	in	mm	lbs	kgs
12	300	19-5/8	498	11-1/2	292	10-1/8	257	770	349
14	350	20-1/2	521	14	356	11-1/2	292	1240	561
16	400	22-5/8	575	15-1/8	384	12-7/8	327	1653	750
18	450	25-1/8	638	17-3/4	451	14-1/2	368	2314	1050
20	500	27-1/2	699	17-3/4	451	18	457	2866	1300
24	600	33	838	19-1/2	495	21-1/2	546	4175	1893

*Minimum companion flange bore.
Available with thru-hole bolting or threaded bolt holes.

Sizes 30" and larger fit **Series A** flanges.

Seat Material	Operating Temperature**	
	°F	°C
Buna-N	-20 to 250	-29 to 121
Viton	-20 to 400	-29 to 204
EPDM	-40 to 300	-40 to 149

**Subject to limitations of body material.

Applicable Standards
• Design ASME B16.5
• Design ASME B16.34
• Testing API 598
• Conforms to API 594 & 6D
• MSS SP – 6
• MSS SP – 25
• MSS SP – 55

FLOW COEFFICIENTS

Size	12"	14"	16"	18"	20"	24"
C_v	4300	5500	7200	9400	12600	19000

KECKLEY

TECHNICAL DATA
DIMENSIONS AND WEIGHTS

Style DF

Retainerless Wafer Double Flange Body
Double Disc Check Valve, 150 lb.
Hastelloy C276 (ASTM A 494, Grade CW12MW)

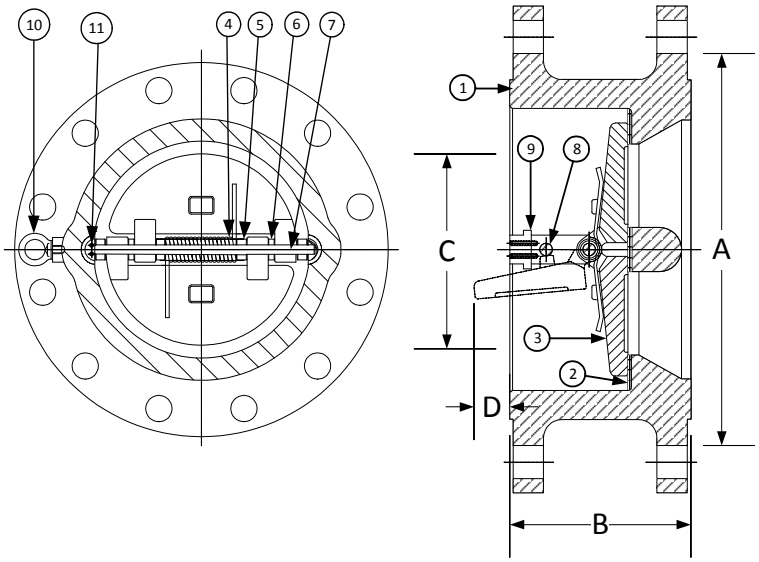

PARTS LIST		
ITEM	DESCRIPTION	MATERIAL
1	Body	Hastelloy C276 (ASTM A 494, Grade CW12MW)
2	Seat	Viton O-Ring
3	Disc	Hastelloy C276 (ASTM A 494, Grade CW12MW)
4	Spring	Inconel X-750
5	Spring Plate	Stainless Steel (ASTM A 182, Grade F-316)
6	Thrust Washer	Stainless Steel (ASTM A 182, Grade F-316)
7	Hinge Pin	Stainless Steel (ASTM A 182, Grade F-316)
8	Stop Pin	Stainless Steel (ASTM A 182, Grade F-316)
9	Locating Piece	Stainless Steel (ASTM A 182, Grade F-316)
10	Lifting Lug	Carbon Steel
11	Screw	Stainless Steel (316)

Above "Standard" Product Number – **DF2R-HC-HC4IX**
Other Options - Reference C2 for available materials.

SIZE		DIMENSIONS						WEIGHTS	
		A		B		C*			
in	mm	in	mm	in	mm	in	mm	lbs	kgs
8	200	11	279	5	127	7-5/8	194	93	42
10	250	13-3/8	340	5-3/4	146	9-9/16	243	189	86
12	300	16-1/8	410	7-1/8	181	11-3/8	289	308	140
14	350	17-3/4	451	7-1/4	184	12-1/2	318	352	160
16	400	20-1/4	514	7-1/2	191	15	381	496	225
18	450	21-5/8	549	8	203	16-7/8	428	551	250
20	500	23-7/8	606	8-5/8	219	8-7/8	480	661	300
24	600	28-1/4	718	8-3/4	222	22-5/8	575	860	389
30	750	34-3/4	883	12	305	29-1/4	743	1512	687
36	900	41-1/4	1048	14-1/2	368	35	889	2525	1145
42	1050	48	1219	17	432	41	1041	4163	1888
48	1200	54-1/2	1384	20-5/8	524	47	1194	5880	2667

*Minimum companion flange bore.
Available with thru-hole bolting or threaded bolt holes.

Sizes 30" and larger fit **Series A** flanges.

Seat Material	Operating Temperature**	
	°F	°C
Buna-N	-20 to 250	-29 to 121
Viton	-20 to 400	-29 to 204
EPDM	-40 to 300	-40 to 149

**Subject to limitations of body material.

Applicable Standards
• Design ASME B16.5
• Design ASME B16.34
• Testing API 598
• Conforms to API 594 & 6D
• MSS SP – 6
• MSS SP – 25
• MSS SP – 55

FLOW COEFFICIENTS

Size	8"	10"	12"	14"	16"	18"
C_v	1800	2600	4300	5500	7200	9400
Size	20"	24"	30"	36"	42"	48"
C_v	12600	19000	37500	60000	89000	124000

KECKLEY

TECHNICAL DATA
DIMENSIONS AND WEIGHTS

Style DF

Retainerless Wafer Double Flange Body
Double Disc Check Valve, 300 lb.
Hastelloy C276 (ASTM A 494, Grade CW12MW)

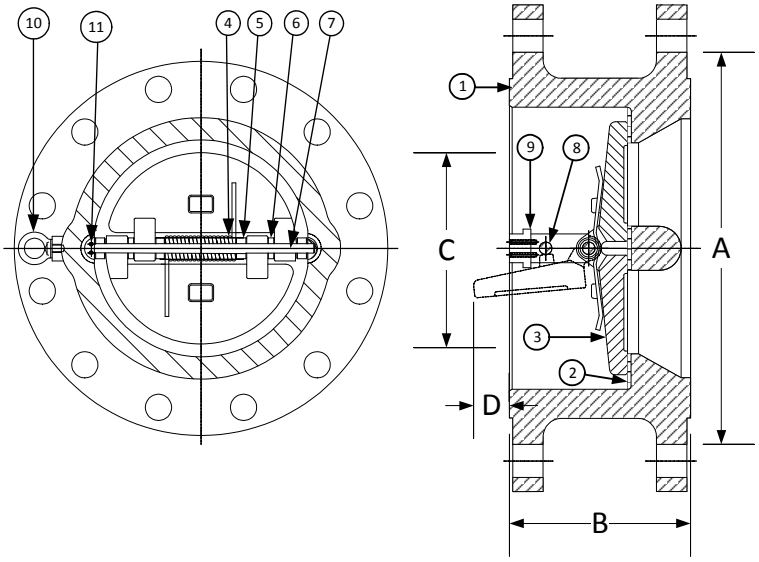

PARTS LIST		
ITEM	DESCRIPTION	MATERIAL
1	Body	Hastelloy C276 (ASTM A 494, Grade CW12MW)
2	Seat	Viton O-Ring
3	Disc	Hastelloy C276 (ASTM A 494, Grade CW12MW)
4	Spring	Inconel X-750
5	Spring Plate	Stainless Steel (ASTM A 182, Grade F-316)
6	Thrust Washer	Stainless Steel (ASTM A 182, Grade F-316)
7	Hinge Pin	Stainless Steel (ASTM A 182, Grade F-316)
8	Stop Pin	Stainless Steel (ASTM A 182, Grade F-316)
9	Locating Piece	Stainless Steel (ASTM A 182, Grade F-316)
10	Lifting Lug	Carbon Steel
11	Screw	Stainless Steel (316)

Above "Standard" Product Number – **DF4R-HC-HC4IX**
Other Options - Reference C2 for available materials.

SIZE		DIMENSIONS						WEIGHTS	
		A		B		C*			
in	mm	in	mm	in	mm	in	mm	lbs	kgs
8	200	12-1/8	308	5	127	7-1/2	191	151	68
10	250	14-1/4	362	5-3/4	146	9-7/16	240	251	114
12	300	16-5/8	422	7-1/8	181	11-3/8	289	465	211
14	350	19-1/8	486	8-3/4	222	12-1/2	318	593	269
16	400	21-1/4	540	9-1/8	232	14-3/8	365	771	350
18	450	23-1/2	597	10-3/8	264	16-1/8	409	970	440
20	500	25-3/4	654	11-1/2	292	17-7/8	454	1078	488
24	600	30-1/2	775	12-1/2	318	22-1/8	562	1516	686
30	750	37-1/2	953	14-1/2	368	28-3/4	730	3100	1406
36	900	44	1118	19	483	35	864	4650	2109
42	1050	45-7/8	1289	22-3/8	568	41	1041	8670	3932
48	1200	52-1/8	1492	24-3/4	629	47	1193	9950	4513

*Minimum companion flange bore.
Available with thru-hole bolting or threaded bolt holes.

Sizes 30" and larger fit **Series A** flanges.

Seat Material	Operating Temperature**	
	°F	°C
Buna-N	-20 to 250	-29 to 121
Viton	-20 to 400	-29 to 204
EPDM	-40 to 300	-40 to 149

**Subject to limitations of body material.

Applicable Standards
• Design ASME B16.5
• Design ASME B16.34
• Testing API 598
• Conforms to API 594 & 6D
• MSS SP – 6
• MSS SP – 25
• MSS SP – 55

FLOW COEFFICIENTS

Size	8"	10"	12"	14"	16"	18"
C_v	1800	2600	4300	5500	7200	9400
Size	20"	24"	30"	36"	42"	48"
C_v	12600	19000	37500	60000	89000	124000

KECKLEY

TECHNICAL DATA
DIMENSIONS AND WEIGHTS

Style DF

Retainerless Wafer Double Flange Body
Double Disc Check Valve, 600 lb.
Hastelloy C276 (ASTM A 494, Grade CW12MW)

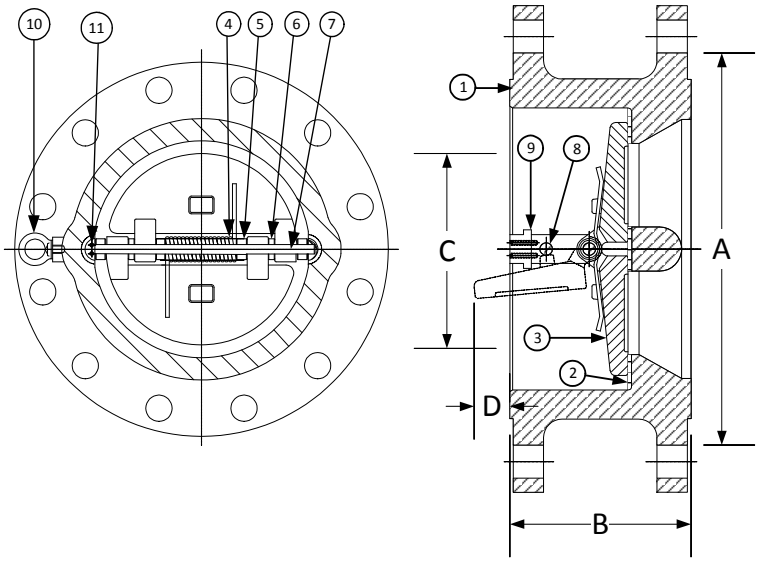

PARTS LIST		
ITEM	DESCRIPTION	MATERIAL
1	Body	Hastelloy C276 (ASTM A 494, Grade CW12MW)
2	Seat	Viton O-Ring
3	Disc	Hastelloy C276 (ASTM A 494, Grade CW12MW)
4	Spring	Inconel X-750
5	Spring Plate	Stainless Steel (ASTM A 182, Grade F-316)
6	Thrust Washer	Stainless Steel (ASTM A 182, Grade F-316)
7	Hinge Pin	Stainless Steel (ASTM A 182, Grade F-316)
8	Stop Pin	Stainless Steel (ASTM A 182, Grade F-316)
9	Locating Piece	Stainless Steel (ASTM A 182, Grade F-316)
10	Lifting Lug	Carbon Steel
11	Screw	Stainless Steel (316)

Above "Standard" Product Number – **DF5R-HC-HC4IX**
Other Options - Reference C2 for available materials.

SIZE		DIMENSIONS						WEIGHTS	
		A		B		C*			
in	mm	in	mm	in	mm	in	mm	lbs	kgs
12	300	18	457	9	229	11-3/8	289	612	277
14	350	19-3/8	492	10-3/4	273	12-1/2	318	826	375
16	400	22-1/4	565	12	305	14-3/8	365	951	430
18	450	24-1/8	613	14-1/4	362	16-1/8	409	1433	650
20	500	26-7/8	683	14-1/2	368	18	457	1763	800
24	600	31-1/8	791	17-1/4	438	21-9/16	548	2755	1250
30	750	38-1/4	972	19-7/8	505	28-3/4	730	5070	2300
36	900	44-1/2	1130	25	635	33-3/4	857	7605	3450
42	1050	48	1219	27-37-64	701	39-1/2	1003	9985	4529
48	1200	-	-	31	787	36	914	12600	5715

*Minimum companion flange bore.
Available with thru-hole bolting or threaded bolt holes.

Sizes 30" and larger fit **Series A** flanges.

Seat Material	Operating Temperature**	
	°F	°C
Buna-N	-20 to 250	-29 to 121
Viton	-20 to 400	-29 to 204
EPDM	-40 to 300	-40 to 149

**Subject to limitations of body material.

Applicable Standards
• Design ASME B16.5
• Design ASME B16.34
• Testing API 598
• Conforms to API 594 & 6D
• MSS SP – 6
• MSS SP – 25
• MSS SP – 55

FLOW COEFFICIENTS

Size	12"	14"	16"	18"	20"	24"
C_v	4300	5500	7200	9400	12600	19000
Size	30"	36"	42"	48"		
C_v	37500	60000	89000	12400		

KECKLEY

TECHNICAL DATA
DIMENSIONS AND WEIGHTS

Style DF

Retainerless Wafer Double Flange Body
Double Disc Check Valve, 900 lb.
Hastelloy C276 (ASTM A 494, Grade CW12MW)

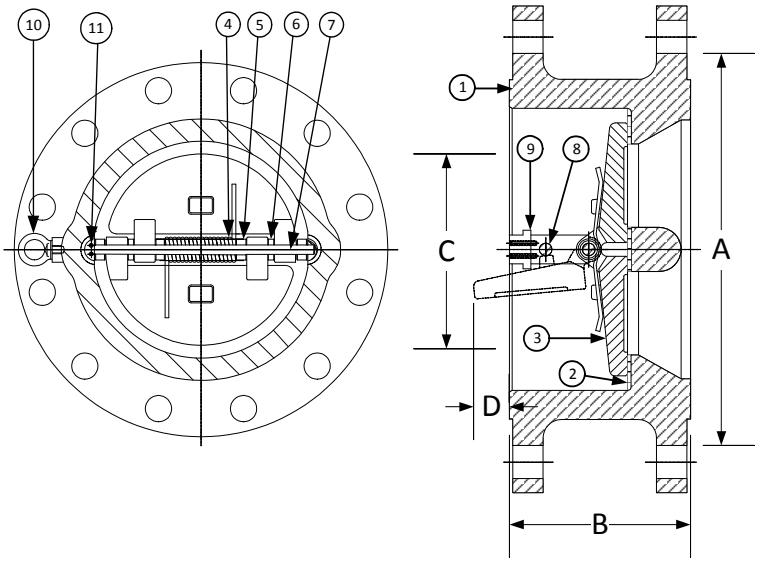

PARTS LIST		
ITEM	DESCRIPTION	MATERIAL
1	Body	Hastelloy C276 (ASTM A 494, Grade CW12MW)
2	Seat	Viton O-Ring
3	Disc	Hastelloy C276 (ASTM A 494, Grade CW12MW)
4	Spring	Inconel X-750
5	Spring Plate	Stainless Steel (ASTM A 182, Grade F-316)
6	Thrust Washer	Stainless Steel (ASTM A 182, Grade F-316)
7	Hinge Pin	Stainless Steel (ASTM A 182, Grade F-316)
8	Stop Pin	Stainless Steel (ASTM A 182, Grade F-316)
9	Locating Piece	Stainless Steel (ASTM A 182, Grade F-316)
10	Lifting Lug	Carbon Steel
11	Screw	Stainless Steel (316)

Above "Standard" Product Number – **DF6R-HC-HC4IX**
Other Options - Reference C2 for available materials.

SIZE		DIMENSIONS						WEIGHTS	
		A		B		C*			
in	mm	in	mm	in	mm	in	mm	lbs	kgs
12	300	19-5/8	498	11-1/2	292	10-1/8	257	770	349
14	350	20-1/2	521	14	356	11-1/2	292	1240	561
16	400	22-5/8	575	15-1/8	384	12-7/8	327	1653	750
18	450	25-1/8	638	17-3/4	451	14-1/2	368	2314	1050
20	500	27-1/2	699	17-3/4	451	18	457	2866	1300
24	600	33	838	19-1/2	495	21-1/2	546	4175	1893

*Minimum companion flange bore.
Available with thru-hole bolting or threaded bolt holes.

Sizes 30" and larger fit **Series A** flanges.

Seat Material	Operating Temperature**	
	°F	°C
Buna-N	-20 to 250	-29 to 121
Viton	-20 to 400	-29 to 204
EPDM	-40 to 300	-40 to 149

**Subject to limitations of body material.

Applicable Standards
• Design ASME B16.5
• Design ASME B16.34
• Testing API 598
• Conforms to API 594 & 6D
• MSS SP – 6
• MSS SP – 25
• MSS SP – 55

FLOW COEFFICIENTS

Size	12"	14"	16"	18"	20"	24"
C_v	4300	5500	7200	9400	12600	19000

KECKLEY

TECHNICAL DATA
DIMENSIONS AND WEIGHTS

Style DF

Retainerless Wafer Double Flange Body
Double Disc Check Valve, 150 lb.
Monel (ASTM A 494, Grade M35-2)

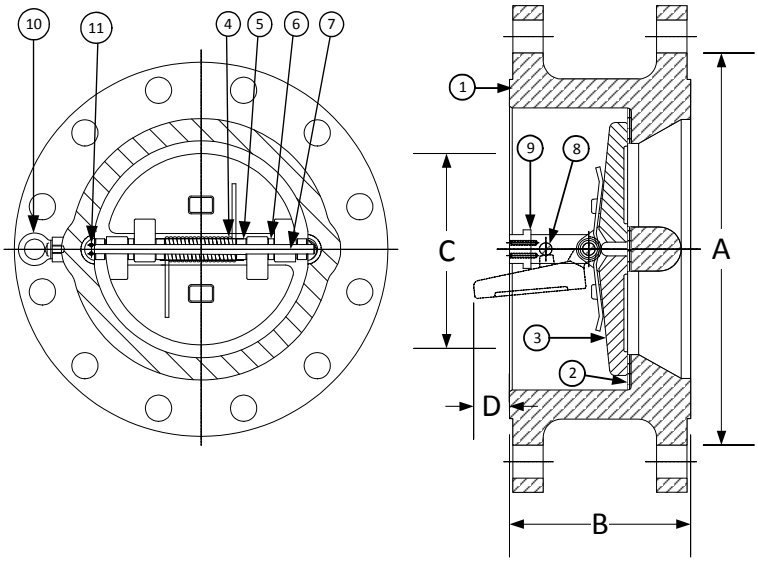

PARTS LIST		
ITEM	DESCRIPTION	MATERIAL
1	Body	Monel (ASTM A 494, Grade M35-2)
2	Seat	Viton O-Ring
3	Disc	Monel (ASTM A 494, Grade M35-2)
4	Spring	Inconel X-750
5	Spring Plate	Stainless Steel (ASTM A 182, Grade F-316)
6	Thrust Washer	Stainless Steel (ASTM A 182, Grade F-316)
7	Hinge Pin	Stainless Steel (ASTM A 182, Grade F-316)
8	Stop Pin	Stainless Steel (ASTM A 182, Grade F-316)
9	Locating Piece	Stainless Steel (ASTM A 182, Grade F-316)
10	Lifting Lug	Carbon Steel
11	Screw	Stainless Steel (316)

Above "Standard" Product Number – **DF2R-ML-ML4IX**
Other Options - Reference C2 for available materials.

SIZE		DIMENSIONS						WEIGHTS	
		A		B		C*			
in	mm	in	mm	in	mm	in	mm	lbs	kgs
8	200	11	279	5	127	7-5/8	194	93	42
10	250	13-3/8	340	5-3/4	146	9-9/16	243	189	86
12	300	16-1/8	410	7-1/8	181	11-3/8	289	308	140
14	350	17-3/4	451	7-1/4	184	12-1/2	318	352	160
16	400	20-1/4	514	7-1/2	191	15	381	496	225
18	450	21-5/8	549	8	203	16-7/8	428	551	250
20	500	23-7/8	606	8-5/8	219	8-7/8	480	661	300
24	600	28-1/4	718	8-3/4	222	22-5/8	575	860	389
30	750	34-3/4	883	12	305	29-1/4	743	1512	687
36	900	41-1/4	1048	14-1/2	368	35	889	2525	1145
42	1050	48	1219	17	432	41	1041	4163	1888
48	1200	54-1/2	1384	20-5/8	524	47	1194	5880	2667

*Minimum companion flange bore.
Available with thru-hole bolting or threaded bolt holes.

Sizes 30" and larger fit **Series A** flanges.

Seat Material	Operating Temperature**	
	°F	°C
Buna-N	-20 to 250	-29 to 121
Viton	-20 to 400	-29 to 204
EPDM	-40 to 300	-40 to 149

**Subject to limitations of body material.

Applicable Standards
• Design ASME B16.5
• Design ASME B16.34
• Testing API 598
• Conforms to API 594 & 6D
• MSS SP – 6
• MSS SP – 25
• MSS SP – 55

FLOW COEFFICIENTS

Size	8"	10"	12"	14"	16"	18"
C_v	1800	2600	4300	5500	7200	9400
Size	20"	24"	30"	36"	42"	48"
C_v	12600	19000	37500	60000	89000	124000

KECKLEY

TECHNICAL DATA
DIMENSIONS AND WEIGHTS

Style DF

Retainerless Wafer Double Flange Body
Double Disc Check Valve, 300 lb.
Monel (ASTM A 494, Grade M35-2)

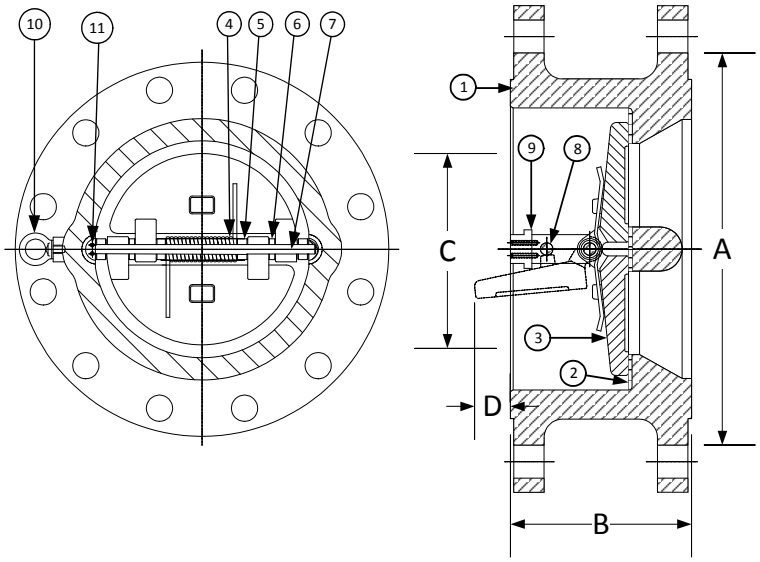

PARTS LIST		
ITEM	DESCRIPTION	MATERIAL
1	Body	Monel (ASTM A 494, Grade M35-2)
2	Seat	Viton O-Ring
3	Disc	Monel (ASTM A 494, Grade M35-2)
4	Spring	Inconel X-750
5	Spring Plate	Stainless Steel (ASTM A 182, Grade F-316)
6	Thrust Washer	Stainless Steel (ASTM A 182, Grade F-316)
7	Hinge Pin	Stainless Steel (ASTM A 182, Grade F-316)
8	Stop Pin	Stainless Steel (ASTM A 182, Grade F-316)
9	Locating Piece	Stainless Steel (ASTM A 182, Grade F-316)
10	Lifting Lug	Carbon Steel
11	Screw	Stainless Steel (316)

Above "Standard" Product Number – **DF4R-ML-ML4IX**
Other Options - Reference C2 for available materials.

SIZE		DIMENSIONS						WEIGHTS	
		A		B		C*			
in	mm	in	mm	in	mm	in	mm	lbs	kgs
8	200	12-1/8	308	5	127	7-1/2	191	151	68
10	250	14-1/4	362	5-3/4	146	9-7/16	240	251	114
12	300	16-5/8	422	7-1/8	181	11-3/8	289	465	211
14	350	19-1/8	486	8-3/4	222	12-1/2	318	593	269
16	400	21-1/4	540	9-1/8	232	14-3/8	365	771	350
18	450	23-1/2	597	10-3/8	264	16-1/8	409	970	440
20	500	25-3/4	654	11-1/2	292	17-7/8	454	1078	488
24	600	30-1/2	775	12-1/2	318	22-1/8	562	1516	686
30	750	37-1/2	953	14-1/2	368	28-3/4	730	3100	1406
36	900	44	1118	19	483	35	864	4650	2109
42	1050	45-7/8	1289	22-3/8	568	41	1041	8670	3932
48	1200	52-1/8	1492	24-3/4	629	47	1193	9950	4513

*Minimum companion flange bore.
Available with thru-hole bolting or threaded bolt holes.

Sizes 30" and larger fit **Series A** flanges.

Seat Material	Operating Temperature**	
	°F	°C
Buna-N	-20 to 250	-29 to 121
Viton	-20 to 400	-29 to 204
EPDM	-40 to 300	-40 to 149

**Subject to limitations of body material.

Applicable Standards
• Design ASME B16.5
• Design ASME B16.34
• Testing API 598
• Conforms to API 594 & 6D
• MSS SP – 6
• MSS SP – 25
• MSS SP – 55

FLOW COEFFICIENTS

Size	8"	10	12"	14"	16"	18"
C_v	1800	2600	4300	5500	7200	9400
Size	**20"**	**24"**	**30"**	**36"**	**42"**	**48"**
C_v	12600	19000	37500	60000	89000	124000

KECKLEY

TECHNICAL DATA
DIMENSIONS AND WEIGHTS

Style DF

Retainerless Wafer Double Flange Body
Double Disc Check Valve, 600 lb.
Monel (ASTM A 494, Grade M35-2)

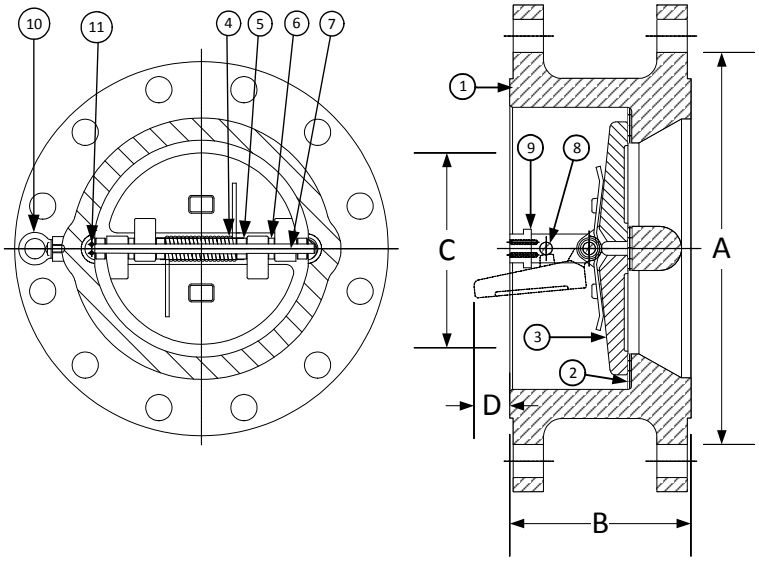

PARTS LIST		
ITEM	DESCRIPTION	MATERIAL
1	Body	Monel (ASTM A 494, Grade M35-2)
2	Seat	Viton O-Ring
3	Disc	Monel (ASTM A 494, Grade M35-2)
4	Spring	Inconel X-750
5	Spring Plate	Stainless Steel (ASTM A 182, Grade F-316)
6	Thrust Washer	Stainless Steel (ASTM A 182, Grade F-316)
7	Hinge Pin	Stainless Steel (ASTM A 182, Grade F-316)
8	Stop Pin	Stainless Steel (ASTM A 182, Grade F-316)
9	Locating Piece	Stainless Steel (ASTM A 182, Grade F-316)
10	Lifting Lug	Carbon Steel
11	Screw	Stainless Steel (316)

Above "Standard" Product Number – **DF5R-ML-ML4IX**
Other Options - Reference C2 for available materials.

SIZE		DIMENSIONS						WEIGHTS	
		A		B		C*			
in	mm	in	mm	in	mm	in	mm	lbs	kgs
12	300	18	457	9	229	11-3/8	289	612	277
14	350	19-3/8	492	10-3/4	273	12-1/2	318	826	375
16	400	22-1/4	565	12	305	14-3/8	365	951	430
18	450	24-1/8	613	14-1/4	362	16-1/8	409	1433	650
20	500	26-7/8	683	14-1/2	368	18	457	1763	800
24	600	31-1/8	791	17-1/4	438	21-9/16	548	2755	1250
30	750	38-1/4	972	19-7/8	505	28-3/4	730	5070	2300
36	900	44-1/2	1130	25	635	33-3/4	857	7605	3450
42	1050	48	1219	27-37-64	701	39-1/2	1003	9985	4529
48	1200	-	-	31	787	36	914	12600	5715

*Minimum companion flange bore.
Available with thru-hole bolting or threaded bolt holes.

Sizes 30" and larger fit **Series A** flanges.

Seat Material	Operating Temperature**	
	°F	°C
Buna-N	-20 to 250	-29 to 121
Viton	-20 to 400	-29 to 204
EPDM	-40 to 300	-40 to 149

**Subject to limitations of body material.

Applicable Standards
• Design ASME B16.5
• Design ASME B16.34
• Testing API 598
• Conforms to API 594 & 6D
• MSS SP – 6
• MSS SP – 25
• MSS SP – 55

FLOW COEFFICIENTS

Size	12"	14"	16"	18"	20"	24"
C_v	4300	5500	7200	9400	12600	19000
Size	30"	36"	42"	48"		
C_v	37500	60000	89000	12400		

KECKLEY

TECHNICAL DATA
DIMENSIONS AND WEIGHTS

Style DF

Retainerless Wafer Double Flange Body
Double Disc Check Valve, 900 lb.
Monel (ASTM A 494, Grade M35-2)

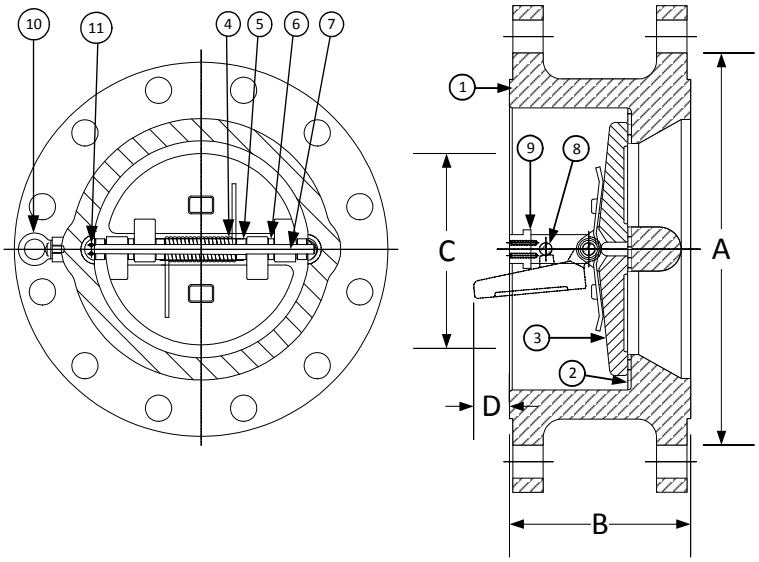

PARTS LIST		
ITEM	DESCRIPTION	MATERIAL
1	Body	Monel (ASTM A 494, Grade M35-2)
2	Seat	Viton O-Ring
3	Disc	Monel (ASTM A 494, Grade M35-2)
4	Spring	Inconel X-750
5	Spring Plate	Stainless Steel (ASTM A 182, Grade F-316)
6	Thrust Washer	Stainless Steel (ASTM A 182, Grade F-316)
7	Hinge Pin	Stainless Steel (ASTM A 182, Grade F-316)
8	Stop Pin	Stainless Steel (ASTM A 182, Grade F-316)
9	Locating Piece	Stainless Steel (ASTM A 182, Grade F-316)
10	Lifting Lug	Carbon Steel
11	Screw	Stainless Steel (316)

Above "Standard" Product Number – **DF6R-ML-ML4IX**
Other Options - Reference C2 for available materials.

SIZE		DIMENSIONS						WEIGHTS	
		A		B		C*			
in	mm	in	mm	in	mm	in	mm	lbs	kgs
12	300	19-5/8	498	11-1/2	292	10-1/8	257	770	349
14	350	20-1/2	521	14	356	11-1/2	292	1240	561
16	400	22-5/8	575	15-1/8	384	12-7/8	327	1653	750
18	450	25-1/8	638	17-3/4	451	14-1/2	368	2314	1050
20	500	27-1/2	699	17-3/4	451	18	457	2866	1300
24	600	33	838	19-1/2	495	21-1/2	546	4175	1893

*Minimum companion flange bore.
Available with thru-hole bolting or threaded bolt holes.

Sizes 30" and larger fit **Series A** flanges.

Seat Material	Operating Temperature**	
	°F	°C
Buna-N	-20 to 250	-29 to 121
Viton	-20 to 400	-29 to 204
EPDM	-40 to 300	-40 to 149

**Subject to limitations of body material.

Applicable Standards
• Design ASME B16.5
• Design ASME B16.34
• Testing API 598
• Conforms to API 594 & 6D
• MSS SP – 6
• MSS SP – 25
• MSS SP – 55

FLOW COEFFICIENTS

Size	12"	14"	16"	18"	20"	24"
C_v	4300	5500	7200	9400	12600	19000

KECKLEY

TECHNICAL DATA
DIMENSIONS AND WEIGHTS

Style DF

Retainerless Wafer Double Flange Body
Double Disc Check Valve, 150 lb.
Duplex (ASTM A 351, Grade CD4MCu)

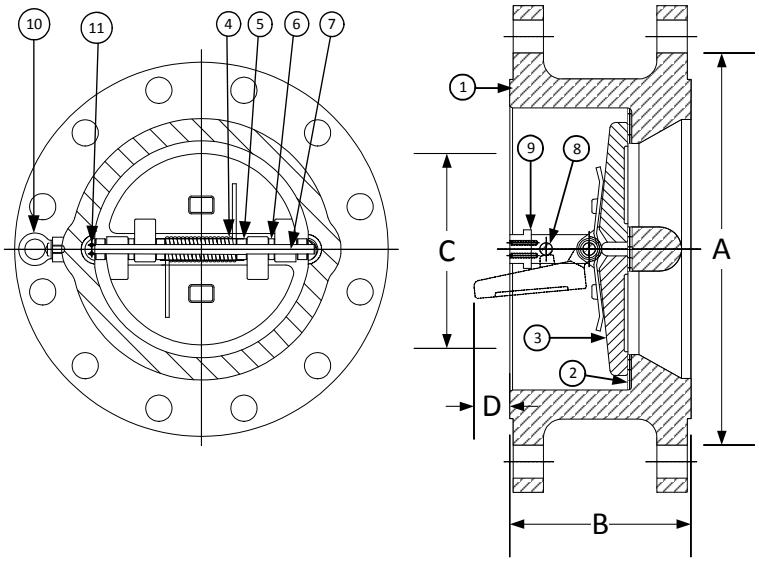

PARTS LIST		
ITEM	DESCRIPTION	MATERIAL
1	Body	Duplex (ASTM A 351, Grade CD4MCu)
2	Seat	Viton O-Ring
3	Disc	Duplex (ASTM A 351, Grade CD4MCu)
4	Spring	Inconel X-750
5	Spring Plate	Stainless Steel (ASTM A 182, Grade F-316)
6	Thrust Washer	Stainless Steel (ASTM A 182, Grade F-316)
7	Hinge Pin	Stainless Steel (ASTM A 182, Grade F-316)
8	Stop Pin	Stainless Steel (ASTM A 182, Grade F-316)
9	Locating Piece	Stainless Steel (ASTM A 182, Grade F-316)
10	Lifting Lug	Carbon Steel
11	Screw	Stainless Steel (316)

Above "Standard" Product Number – **DF2R-DP-DP4IX**
Other Options - Reference C2 for available materials.

SIZE		DIMENSIONS						WEIGHTS	
		A		B		C*			
in	mm	in	mm	in	mm	in	mm	lbs	kgs
8	200	11	279	5	127	7-5/8	194	93	42
10	250	13-3/8	340	5-3/4	146	9-9/16	243	189	86
12	300	16-1/8	410	7-1/8	181	11-3/8	289	308	140
14	350	17-3/4	451	7-1/4	184	12-1/2	318	352	160
16	400	20-1/4	514	7-1/2	191	15	381	496	225
18	450	21-5/8	549	8	203	16-7/8	428	551	250
20	500	23-7/8	606	8-5/8	219	8-7/8	480	661	300
24	600	28-1/4	718	8-3/4	222	22-5/8	575	860	389
30	750	34-3/4	883	12	305	29-1/4	743	1512	687
36	900	41-1/4	1048	14-1/2	368	35	889	2525	1145
42	1050	48	1219	17	432	41	1041	4163	1888
48	1200	54-1/2	1384	20-5/8	524	47	1194	5880	2667

*Minimum companion flange bore.
Available with thru-hole bolting or threaded bolt holes.

Sizes 30" and larger fit **Series A** flanges.

Seat Material	Operating Temperature**	
	°F	°C
Buna-N	-20 to 250	-29 to 121
Viton	-20 to 400	-29 to 204
EPDM	-40 to 300	-40 to 149

**Subject to limitations of body material.

Applicable Standards
• Design ASME B16.5
• Design ASME B16.34
• Testing API 598
• Conforms to API 594 & 6D
• MSS SP – 6
• MSS SP – 25
• MSS SP – 55

FLOW COEFFICIENTS

Size	8"	10"	12"	14"	16"	18"
C_v	1800	2600	4300	5500	7200	9400
Size	**20"**	**24"**	**30"**	**36"**	**42"**	**48"**
C_v	12600	19000	37500	60000	89000	124000

KECKLEY COMPANY • 3400 Cleveland Street • Skokie, Illinois 60076 1-800-KECKLEY

KECKLEY

TECHNICAL DATA
DIMENSIONS AND WEIGHTS

Style DF

Retainerless Wafer Double Flange Body
Double Disc Check Valve, 300 lb.
Duplex (ASTM A 351, Grade CD4MCu)

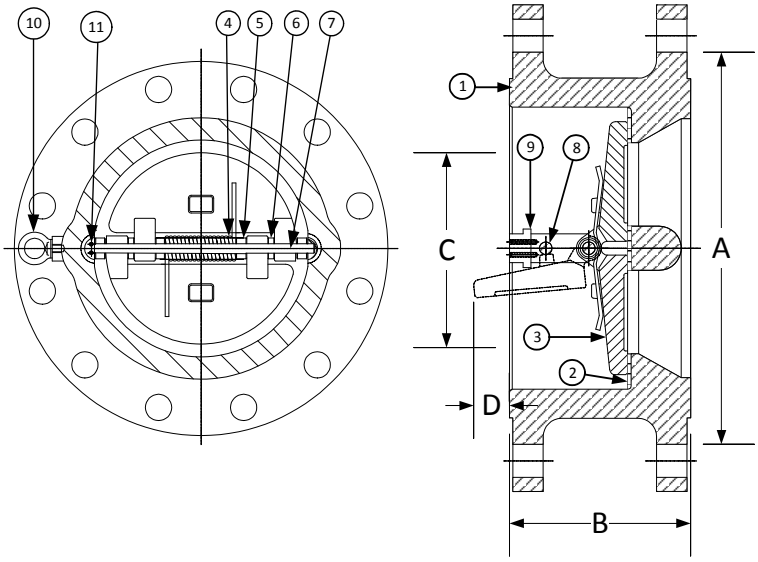

PARTS LIST		
ITEM	DESCRIPTION	MATERIAL
1	Body	Duplex (ASTM A 351, Grade CD4MCu)
2	Seat	Viton O-Ring
3	Disc	Duplex (ASTM A 351, Grade CD4MCu)
4	Spring	Inconel X-750
5	Spring Plate	Stainless Steel (ASTM A 182, Grade F-316)
6	Thrust Washer	Stainless Steel (ASTM A 182, Grade F-316)
7	Hinge Pin	Stainless Steel (ASTM A 182, Grade F-316)
8	Stop Pin	Stainless Steel (ASTM A 182, Grade F-316)
9	Locating Piece	Stainless Steel (ASTM A 182, Grade F-316)
10	Lifting Lug	Carbon Steel
11	Screw	Stainless Steel (316)

Above "Standard" Product Number – **DF4R-DP-DP4IX**
Other Options - Reference C2 for available materials.

SIZE		DIMENSIONS						WEIGHTS	
		A		B		C*			
in	mm	in	mm	in	mm	in	mm	lbs	kgs
8	200	12-1/8	308	5	127	7-1/2	191	151	68
10	250	14-1/4	362	5-3/4	146	9-7/16	240	251	114
12	300	16-5/8	422	7-1/8	181	11-3/8	289	465	211
14	350	19-1/8	486	8-3/4	222	12-1/2	318	593	269
16	400	21-1/4	540	9-1/8	232	14-3/8	365	771	350
18	450	23-1/2	597	10-3/8	264	16-1/8	409	970	440
20	500	25-3/4	654	11-1/2	292	17-7/8	454	1078	488
24	600	30-1/2	775	12-1/2	318	22-1/8	562	1516	686
30	750	37-1/2	953	14-1/2	368	28-3/4	730	3100	1406
36	900	44	1118	19	483	35	864	4650	2109
42	1050	45-7/8	1289	22-3/8	568	41	1041	8670	3932
48	1200	52-1/8	1492	24-3/4	629	47	1193	9950	4513

*Minimum companion flange bore.
Available with thru-hole bolting or threaded bolt holes.

Sizes 30" and larger fit **Series A** flanges.

Seat Material	Operating Temperature**	
	°F	°C
Buna-N	-20 to 250	-29 to 121
Viton	-20 to 400	-29 to 204
EPDM	-40 to 300	-40 to 149

**Subject to limitations of body material.

Applicable Standards
• Design ASME B16.5
• Design ASME B16.34
• Testing API 598
• Conforms to API 594 & 6D
• MSS SP – 6
• MSS SP – 25
• MSS SP – 55

FLOW COEFFICIENTS

Size	8"	10"	12"	14"	16"	18"
C_v	1800	2600	4300	5500	7200	9400
Size	**20"**	**24"**	**30"**	**36"**	**42"**	**48"**
C_v	12600	19000	37500	60000	89000	124000

KECKLEY

TECHNICAL DATA
DIMENSIONS AND WEIGHTS

Style DF

Retainerless Wafer Double Flange Body
Double Disc Check Valve, 600 lb.
Duplex (ASTM A 351, Grade CD4MCu)

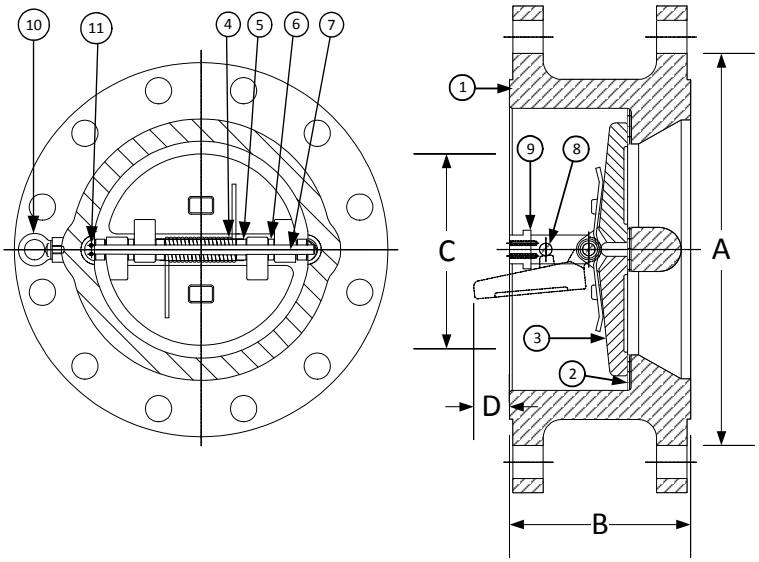

PARTS LIST		
ITEM	DESCRIPTION	MATERIAL
1	Body	Duplex (ASTM A 351, Grade CD4MCu)
2	Seat	Viton O-Ring
3	Disc	Duplex (ASTM A 351, Grade CD4MCu)
4	Spring	Inconel X-750
5	Spring Plate	Stainless Steel (ASTM A 182, Grade F-316)
6	Thrust Washer	Stainless Steel (ASTM A 182, Grade F-316)
7	Hinge Pin	Stainless Steel (ASTM A 182, Grade F-316)
8	Stop Pin	Stainless Steel (ASTM A 182, Grade F-316)
9	Locating Piece	Stainless Steel (ASTM A 182, Grade F-316)
10	Lifting Lug	Carbon Steel
11	Screw	Stainless Steel (316)

Above "Standard" Product Number – **DF5R-DP-DP4IX**
Other Options - Reference C2 for available materials.

SIZE		DIMENSIONS						WEIGHTS	
		A		B		C*			
in	mm	in	mm	in	mm	in	mm	lbs	kgs
12	300	18	457	9	229	11-3/8	289	612	277
14	350	19-3/8	492	10-3/4	273	12-1/2	318	826	375
16	400	22-1/4	565	12	305	14-3/8	365	951	430
18	450	24-1/8	613	14-1/4	362	16-1/8	409	1433	650
20	500	26-7/8	683	14-1/2	368	18	457	1763	800
24	600	31-1/8	791	17-1/4	438	21-9/16	548	2755	1250
30	750	38-1/4	972	19-7/8	505	28-3/4	730	5070	2300
36	900	44-1/2	1130	25	635	33-3/4	857	7605	3450
42	1050	48	1219	27-37-64	701	39-1/2	1003	9985	4529
48	1200	-	-	31	787	36	914	12600	5715

*Minimum companion flange bore.
Available with thru-hole bolting or threaded bolt holes.

Sizes 30" and larger fit **Series A** flanges.

Seat Material	Operating Temperature**	
	°F	°C
Buna-N	-20 to 250	-29 to 121
Viton	-20 to 400	-29 to 204
EPDM	-40 to 300	-40 to 149

**Subject to limitations of body material.

Applicable Standards
• Design ASME B16.5
• Design ASME B16.34
• Testing API 598
• Conforms to API 594 & 6D
• MSS SP – 6
• MSS SP – 25
• MSS SP – 55

FLOW COEFFICIENTS

Size	12"	14"	16"	18"	20"	24"
C_v	4300	5500	7200	9400	12600	19000
Size	30"	36"	42"	48"		
C_v	37500	60000	89000	12400		

KECKLEY

TECHNICAL DATA
DIMENSIONS AND WEIGHTS

Style DF

Retainerless Wafer Double Flange Body
Double Disc Check Valve, 900 lb.
Duplex (ASTM A 351, Grade CD4MCu)

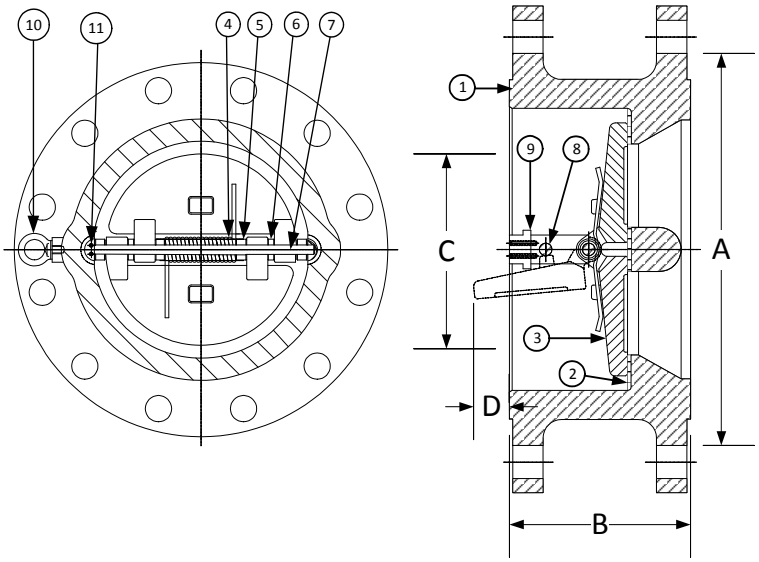

PARTS LIST		
ITEM	DESCRIPTION	MATERIAL
1	Body	Duplex (ASTM A 351, Grade CD4MCu)
2	Seat	Viton O-Ring
3	Disc	Duplex (ASTM A 351, Grade CD4MCu)
4	Spring	Inconel X-750
5	Spring Plate	Stainless Steel (ASTM A 182, Grade F-316)
6	Thrust Washer	Stainless Steel (ASTM A 182, Grade F-316)
7	Hinge Pin	Stainless Steel (ASTM A 182, Grade F-316)
8	Stop Pin	Stainless Steel (ASTM A 182, Grade F-316)
9	Locating Piece	Stainless Steel (ASTM A 182, Grade F-316)
10	Lifting Lug	Carbon Steel
11	Screw	Stainless Steel (316)

Above "Standard" Product Number – **DF6R-DP-DP4IX**
Other Options - Reference C2 for available materials.

SIZE		DIMENSIONS						WEIGHTS	
		A		B		C*			
in	mm	in	mm	in	mm	in	mm	lbs	kgs
12	300	19-5/8	498	11-1/2	292	10-1/8	257	770	349
14	350	20-1/2	521	14	356	11-1/2	292	1240	561
16	400	22-5/8	575	15-1/8	384	12-7/8	327	1653	750
18	450	25-1/8	638	17-3/4	451	14-1/2	368	2314	1050
20	500	27-1/2	699	17-3/4	451	18	457	2866	1300
24	600	33	838	19-1/2	495	21-1/2	546	4175	1893

*Minimum companion flange bore.
Available with thru-hole bolting or threaded bolt holes.

Sizes 30" and larger fit **Series A** flanges.

Seat Material	Operating Temperature**	
	°F	°C
Buna-N	-20 to 250	-29 to 121
Viton	-20 to 400	-29 to 204
EPDM	-40 to 300	-40 to 149

**Subject to limitations of body material.

Applicable Standards
• Design ASME B16.5
• Design ASME B16.34
• Testing API 598
• Conforms to API 594 & 6D
• MSS SP – 6
• MSS SP – 25
• MSS SP – 55

FLOW COEFFICIENTS

Size	12"	14"	16"	18"	20"	24"
C_v	4300	5500	7200	9400	12600	19000

KECKLEY

TECHNICAL DATA
DIMENSIONS AND WEIGHTS

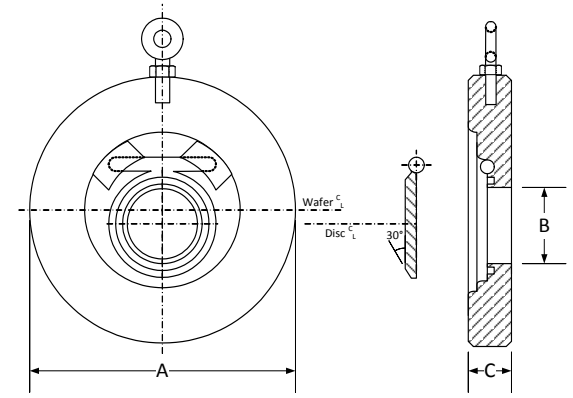

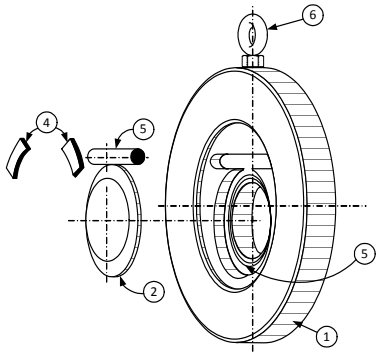

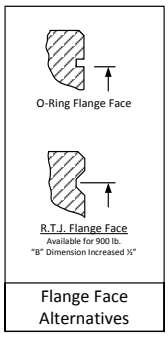

Style SP & Style LP

Short Pattern & Long Pattern
Wafer Check Valve, 150 lb.
Alloy 20

PARTS LIST		
ITEM	DESCRIPTION	MATERIAL
1	Body	Alloy 20
2	Disc	Alloy 20
3	Hinge pin	Stainless Steel (302)
4	Pin retainer	Stainless Steel (302)
5	O-ring	Viton
6	Eye bolt w/ hex nut	Carbon Steel (ASTM A 105)

Above "Standard" Product Number for Short Pattern– **SP2R-A2-A24**
Above "Standard" Product Number for Long Pattern– **LP2R-A2-A24**
Other Options - Reference C2 for available materials.
Specify application and conditions so proper material grade can be supplied.

SIZE		DIMENSIONS								WEIGHTS			
		A		B		C							
		Short & Long		Short & Long		Short		Long		Short		Long	
in	mm	in	mm	in	mm	in	mm	in	mm	lbs	kgs	lbs	kgs
1-1/2	40	3-3/8	86	7/8	22	13/16	21	2-3/8	60	3	1	10	5
2	50	4-1/8	105	1-1/8	29	3/4	19	2-3/8	60	3	1	10	5
2-1/2	65	4-7/8	124	1-3/8	35	3/4	19	2-5/8	67	4	2	13	6
3	80	5-3/8	137	1-3/4	44	3/4	19	2-7/8	73	5	2	15	7
4	100	6-7/8	175	2-5/8	67	3/4	19	2-7/8	73	6	3	20	9
6	150	8-3/4	222	4-5/8	117	1	25	3-7/8	98	12	5	48	22
8	200	11	279	6	152	1-1/8	29	5	127	24	11	100	45
10	250	13-3/8	340	7-3/4	197	1-1/8	29	5-3/4	146	32	15	160	73
12	300	16-1/8	410	9-1/2	241	1-1/2	38	7-1/8	181	62	28	215	98
14	350	17-3/4	451	10-1/2	267	1-3/4	44	7-1/4	184	TBA	TBA	TBA	TBA
16	400	20-1/4	514	12-1/2	318	2	51	7-1/2	191	TBA	TBA	TBA	TBA
18	450	21-5/8	549	14	356	2-1/4	57	8	203	TBA	TBA	TBA	TBA
20	500	23-7/8	606	16	406	2-1/2	64	8-3/4	222	TBA	TBA	TBA	TBA
24	600	28-1/4	718	19-1/4	489	2-3/4	70	8-3/4	222	TBA	TBA	TBA	TBA
30	750	34-3/4	883	24	610	3	76	-	-	TBA	TBA	TBA	TBA
36	900	41-1/4	1048	28-3/4	730	3-1/2	89	14	356	TBA	TBA	TBA	TBA
42	1050	48	1219	33-1/2	851	4-1/4	108	-	-	TBA	TBA	TBA	TBA
60	1500	68-3/8	1737	47-3/4	1213	6	152	-	-	TBA	TBA	TBA	TBA

Certified dimensional drawings are available upon request.
†This table reflects only the nearest metric equivalents.

Seat Material	Operating Temperature**	
	°F	°C
Buna-N	-20 to 250	-29 to 121
Viton	-20 to 400	-29 to 204
EPDM	-40 to 300	-40 to 149

**Subject to limitations of body material.

KECKLEY COMPANY • 3400 Cleveland Street • Skokie, Illinois 60076 1-800-KECKLEY

KECKLEY

TECHNICAL DATA
DIMENSIONS AND WEIGHTS

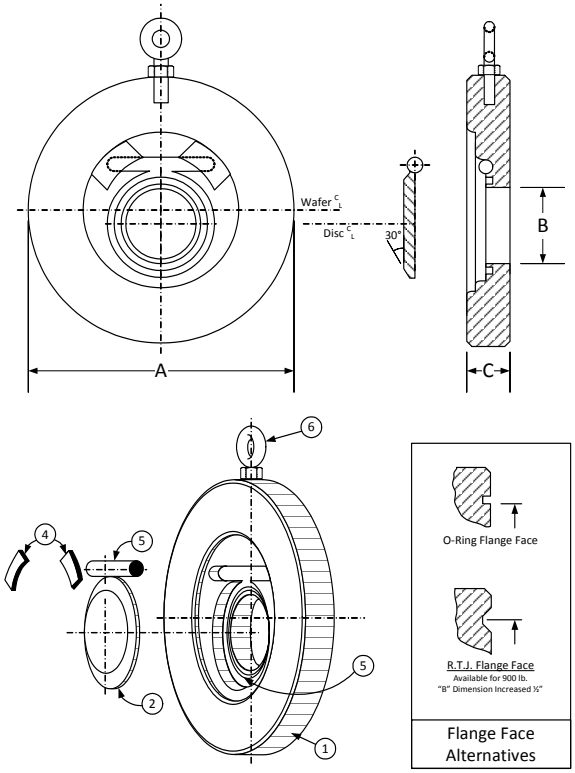

Style SP & Style LP

Short Pattern & Long Pattern
Wafer Check Valve, 300 lb.
Alloy 20

PARTS LIST		
ITEM	DESCRIPTION	MATERIAL
1	Body	Alloy 20
2	Disc	Alloy 20
3	Hinge pin	Stainless Steel (302)
4	Pin retainer	Stainless Steel (302)
5	O-ring	Viton
6	Eye bolt w/ hex nut	Carbon Steel (ASTM A 105)

Above "Standard" Product Number for Short Pattern– **SP4R-A2-A24**
Above "Standard" Product Number for Long Pattern– **LP4R-A2-A24**
Other Options - Reference C2 for available materials.
Specify application and conditions so proper material grade can be supplied.

SIZE		DIMENSIONS								WEIGHTS			
		A		B		C							
		Short & Long		Short & Long		Short		Long		Short		Long	
in	mm	in	mm	in	mm	in	mm	in	mm	lbs	kgs	lbs	kgs
2	50	4-3/8	111	1-1/8	29	3/4	19	2-3/8	60	3	1	12	5
2-1/2	65	5-1/8	130	1-3/8	35	3/4	19	2-5/8	67	4	2	15	7
3	80	5-7/8	149	1-3/4	44	3/4	19	2-7/8	73	6	3	18	8
4	100	7-1/8	181	2-5/8	67	3/4	19	2-7/8	73	7	3	25	11
6	150	9-7/8	251	4-5/8	117	7/8	22	3-7/8	98	15	7	58	26
8	200	12-1/8	308	6	152	1-1/8	29	5	127	29	13	120	54
10	250	14-1/4	362	7-3/4	197	1-1/2	38	5-3/4	146	60	27	180	82
12	300	16-5/8	422	9-1/2	241	2	51	7-1/8	181	95	43	235	107
14	350	19-1/8	486	10-1/2	267	2	51	8-3/4	222	TBA	TBA	TBA	TBA
16	400	21-1/4	540	12-1/2	318	2	51	9-1/8	232	TBA	TBA	TBA	TBA
18	450	23-1/2	597	14	356	3	76	10-3/8	264	TBA	TBA	TBA	TBA
20	500	25-3/4	654	16	406	3-1/4	83	11-1/2	292	TBA	TBA	TBA	TBA
24	600	30-1/2	775	19-1/4	489	3-3/4	95	12-1/2	318	TBA	TBA	TBA	TBA
30	750	37-1/2	953	24	610	4-3/4	121	-	-	TBA	TBA	TBA	TBA
36	900	44	1118	28-3/4	730	5-3/4	146	-	-	TBA	TBA	TBA	TBA
42	1050	50-3/4	1289	33-1/2	851	6	152	-	-	TBA	TBA	TBA	TBA

Certified dimensional drawings are available upon request.
†This table reflects only the nearest metric equivalents.

Seat Material	Operating Temperature**	
	°F	°C
Buna-N	-20 to 250	-29 to 121
Viton	-20 to 400	-29 to 204
EPDM	-40 to 300	-40 to 149

**Subject to limitations of body material.

KECKLEY

TECHNICAL DATA
DIMENSIONS AND WEIGHTS

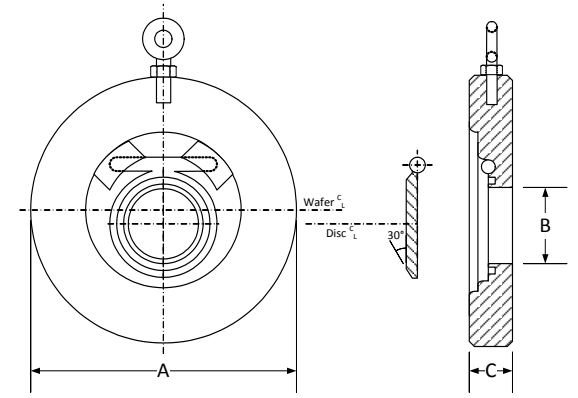

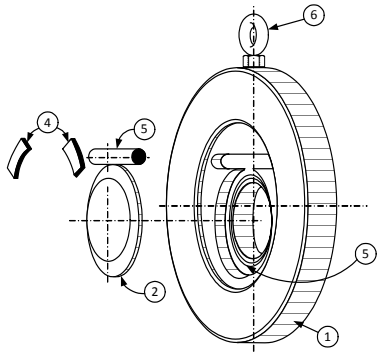

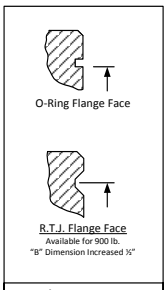

Flange Face Alternatives

Style SP & Style LP

Short Pattern & Long Pattern
Wafer Check Valve, 600 lb.
Alloy 20

PARTS LIST		
ITEM	DESCRIPTION	MATERIAL
1	Body	Alloy 20
2	Disc	Alloy 20
3	Hinge pin	Stainless Steel (302)
4	Pin retainer	Stainless Steel (302)
5	O-ring	Viton
6	Eye bolt w/ hex nut	Carbon Steel (ASTM A 105)

Above "Standard" Product Number for Short Pattern– **SP5R-A2-A24**
Above "Standard" Product Number for Long Pattern– **LP5R-A2-A24**
Other Options - Reference C2 for available materials.
Specify application and conditions so proper material grade can be supplied.

SIZE		DIMENSIONS								WEIGHTS			
		A		B		C							
		Short & Long		Short & Long		Short		Long		Short		Long	
in	mm	in	mm	in	mm	in	mm	in	mm	lbs	kgs	lbs	kgs
2	50	4-3/8	111	1	25	3/4	19	2-3/8	60	4	2	12	5
2-1/2	65	5-1/8	130	1-3/8	35	3/4	19	2-5/8	67	6	3	15	7
3	80	5-7/8	149	1-3/4	44	3/4	19	2-7/8	73	7	3	18	8
4	100	7-5/8	194	2-5/8	67	7/8	22	3-1/8	79	12	5	25	11
6	150	10-1/2	267	4	102	1-1/8	29	5-3/8	137	24	11	70	32
8	200	12-5/8	321	5	127	1-1/2	38	6-1/2	165	57	26	160	73
10	250	15-3/4	400	6-7/8	175	2-1/4	57	8-3/8	213	131	59	200	91
12	300	18	457	8-1/2	216	2-3/8	60	9	229	234	106	265	120
14	350	19-3/8	492	9-1/2	241	2-3/8	60	10-3/4	273	TBA	TBA	TBA	TBA
16	400	22-1/4	565	11	279	2-7/8	73	12	305	TBA	TBA	TBA	TBA
18	450	24-1/8	613	12-1/2	318	3-1/8	79	14-1/4	362	TBA	TBA	TBA	TBA
20	500	26-7/8	683	14-1/4	362	3-5/8	92	14-1/2	368	TBA	TBA	TBA	TBA
24	600	31-1/8	791	17-3/8	441	4-1/4	108	-	-	TBA	TBA	TBA	TBA
26	650	34-1/8	867	19	483	4-3/4	121	17-1/4	438	TBA	TBA	TBA	TBA
30	750	38-1/4	972	22	559	5-1/4	133	-	-	TBA	TBA	TBA	TBA
36	900	44-1/2	1130	26-1/2	673	6-1/4	159	-	-	TBA	TBA	TBA	TBA

Certified dimensional drawings are available upon request.
†This table reflects only the nearest metric equivalents.

Seat Material	Operating Temperature**	
	°F	°C
Buna-N	-20 to 250	-29 to 121
Viton	-20 to 400	-29 to 204
EPDM	-40 to 300	-40 to 149

**Subject to limitations of body material.

KECKLEY

TECHNICAL DATA
DIMENSIONS AND WEIGHTS

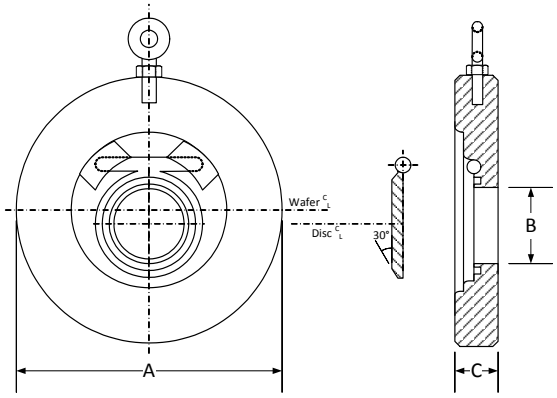

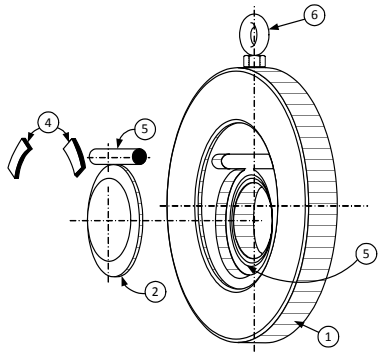

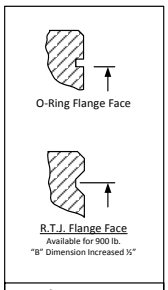

Flange Face Alternatives

Style SP & Style LP

Short Pattern & Long Pattern
Wafer Check Valve, 900 lb.
Alloy 20

PARTS LIST		
ITEM	DESCRIPTION	MATERIAL
1	Body	Alloy 20
2	Disc	Alloy 20
3	Hinge pin	Stainless Steel (302)
4	Pin retainer	Stainless Steel (302)
5	O-ring	Viton
6	Eye bolt w/ hex nut	Carbon Steel (ASTM A 105)

Above "Standard" Product Number for Short Pattern– **SP6R-A2-A24**
Above "Standard" Product Number for Long Pattern– **LP6R-A2-A24**
Other Options - Reference C2 for available materials.
Specify application and conditions so proper material grade can be supplied.

SIZE		DIMENSIONS								WEIGHTS			
		A		B		C							
		Short & Long		Short & Long		Short		Long		Short		Long	
in	mm	in	mm	in	mm	in	mm	in	mm	lbs	kgs	lbs	kgs
2	50	5-5/8	143	1	25	3/4	19	2-3/4	70	4	2	14	6
2-1/2	65	6-1/2	165	1-3/8	35	3/4	19	3-1/4	83	6	3	16	7
3	80	6-5/8	168	1-3/4	44	3/4	19	3-1/4	83	7	3	22	10
4	100	8-1/8	206	2-5/8	67	7/8	22	4	102	12	5	30	14
6	150	11-3/8	289	4	102	1-3/8	35	6-1/4	159	24	11	82	37
8	200	14-1/8	359	5	127	1-3/4	44	8-1/8	206	57	26	188	85
10	250	17-1/8	435	6-7/8	175	2-1/4	57	9-1/2	241	131	59	225	102
12	300	19-5/8	498	8-1/2	216	2-3/8	60	11-1/2	292	234	106	295	134
14	350	20-1/2	521	9-1/2	241	2-3/4	70	14	356	TBA	TBA	TBA	TBA
16	400	22-5/8	575	11	279	3-1/4	83	15-1/8	384	TBA	TBA	TBA	TBA
18	450	25-1/8	638	12-1/2	318	3-3/4	95	17-3/4	451	TBA	TBA	TBA	TBA
20	500	27-1/2	699	14-1/4	362	4-1/4	108	17-3/4	451	TBA	TBA	TBA	TBA
24	600	33	838	17-3/8	441	5-1/4	133	-	-	TBA	TBA	TBA	TBA
26	650	34-3/4	883	19	483	5-3/4	146	19-1/2	495	TBA	TBA	TBA	TBA
30	750	39-3/4	1010	22	559	6-3/4	171	-	-	TBA	TBA	TBA	TBA
36	900	47-1/4	1200	26-1/2	673	8	203	-	-	TBA	TBA	TBA	TBA

Certified dimensional drawings are available upon request.
†This table reflects only the nearest metric equivalents.

Seat Material	Operating Temperature**	
	°F	°C
Buna-N	-20 to 250	-29 to 121
Viton	-20 to 400	-29 to 204
EPDM	-40 to 300	-40 to 149

**Subject to limitations of body material.

KECKLEY

TECHNICAL DATA
DIMENSIONS AND WEIGHTS

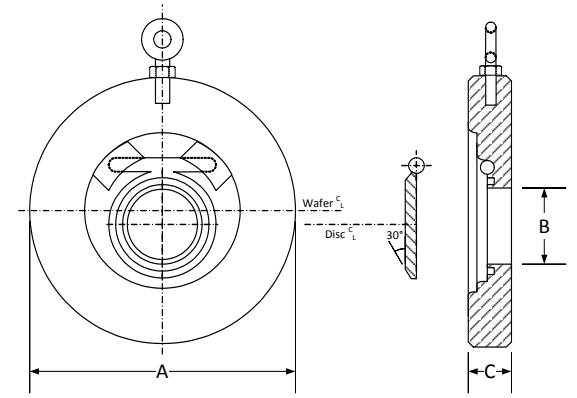

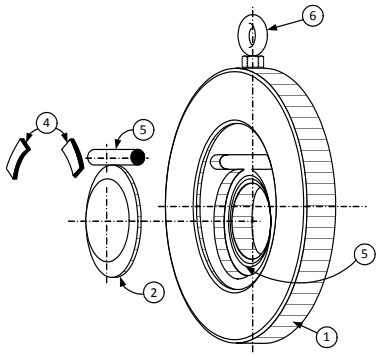

Style SP & Style LP

Short Pattern & Long Pattern
Wafer Check Valve, 1500 lb.
Alloy 20

PARTS LIST		
ITEM	DESCRIPTION	MATERIAL
1	Body	Alloy 20
2	Disc	Alloy 20
3	Hinge pin	Stainless Steel (302)
4	Pin retainer	Stainless Steel (302)
5	O-ring	Viton
6	Eye bolt w/ hex nut	Carbon Steel (ASTM A 105)

Above "Standard" Product Number for Short Pattern– **SP7R-A2-A24**
Above "Standard" Product Number for Long Pattern– **LP7R-A2-A24**
Other Options - Reference C2 for available materials.
Specify application and conditions so proper material grade can be supplied.

SIZE		DIMENSIONS								WEIGHTS			
		A		B		C							
		Short & Long		Short & Long		Short		Long		Short		Long	
in	mm	in	mm	in	mm	in	mm	in	mm	lbs	kgs	lbs	kgs
1-1/2	40	3-7/8	98	7/8	22	3/4	19	2-3/4	70	4	2	14	6
2	50	5-5/8	143	1	25	3/4	19	2-3/4	70	4	2	14	6
3	80	6-7/8	175	1-3/4	44	7/8	22	3-1/4	83	9	4	24	11
4	100	8-1/4	210	2-1/4	57	1-1/4	32	4	102	19	9	35	16
6	150	11-1/8	283	3-3/4	95	1-3/4	44	6-1/4	159	49	22	92	42
8	200	13-7/8	352	4-3/4	121	2-1/4	57	8-1/8	206	74	34	195	88
10	250	17-1/8	435	6-3/4	171	2-7/8	73	9-3/4	248	158	72	245	111
12	300	20-1/2	521	8-1/2	216	3-3/8	86	12	305	255	116	330	150

Certified dimensional drawings are available upon request.
†This table reflects only the nearest metric equivalents.

Seat Material	Operating Temperature**	
	°F	°C
Buna-N	-20 to 250	-29 to 121
Viton	-20 to 400	-29 to 204
EPDM	-40 to 300	-40 to 149

**Subject to limitations of body material.

KECKLEY

TECHNICAL DATA
DIMENSIONS AND WEIGHTS

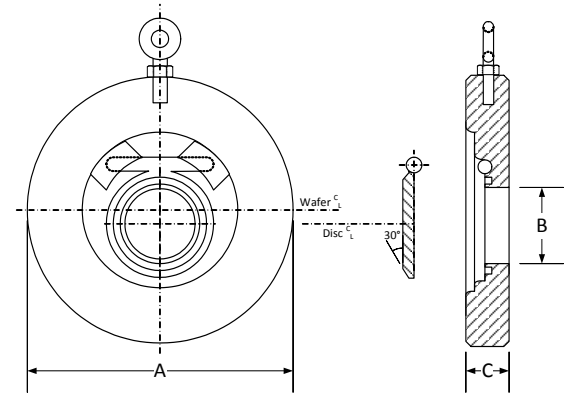

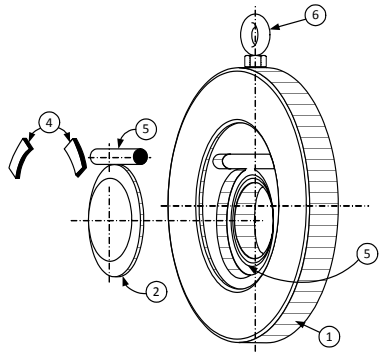

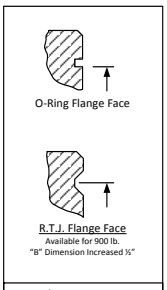

Flange Face Alternatives

Style SP & Style LP

Short Pattern & Long Pattern
Wafer Check Valve, 150 lb.
Hastelloy C276

PARTS LIST		
ITEM	DESCRIPTION	MATERIAL
1	Body	Hastelloy C276
2	Disc	Hastelloy C276
3	Hinge pin	Stainless Steel (302)
4	Pin retainer	Stainless Steel (302)
5	O-ring	Viton
6	Eye bolt w/ hex nut	Carbon Steel (ASTM A 105)

Above "Standard" Product Number for Short Pattern– **SP2R-HC-HC4**
Above "Standard" Product Number for Long Pattern– **LP2R-HC-HC4**
Other Options - Reference C2 for available materials.
Specify application and conditions so proper material grade can be supplied.

SIZE		DIMENSIONS								WEIGHTS			
		A		B		C							
		Short & Long		Short & Long		Short		Long		Short		Long	
in	mm	in	mm	in	mm	in	mm	in	mm	lbs	kgs	lbs	kgs
1-1/2	40	3-3/8	86	7/8	22	13/16	21	2-3/8	60	3	1	10	5
2	50	4-1/8	105	1-1/8	29	3/4	19	2-3/8	60	3	1	10	5
2-1/2	65	4-7/8	124	1-3/8	35	3/4	19	2-5/8	67	4	2	13	6
3	80	5-3/8	137	1-3/4	44	3/4	19	2-7/8	73	5	2	15	7
4	100	6-7/8	175	2-5/8	67	3/4	19	2-7/8	73	6	3	20	9
6	150	8-3/4	222	4-5/8	117	1	25	3-7/8	98	12	5	48	22
8	200	11	279	6	152	1-1/8	29	5	127	24	11	100	45
10	250	13-3/8	340	7-3/4	197	1-1/8	29	5-3/4	146	32	15	160	73
12	300	16-1/8	410	9-1/2	241	1-1/2	38	7-1/8	181	62	28	215	98
14	350	17-3/4	451	10-1/2	267	1-3/4	44	7-1/4	184	TBA	TBA	TBA	TBA
16	400	20-1/4	514	12-1/2	318	2	51	7-1/2	191	TBA	TBA	TBA	TBA
18	450	21-5/8	549	14	356	2-1/4	57	8	203	TBA	TBA	TBA	TBA
20	500	23-7/8	606	16	406	2-1/2	64	8-3/4	222	TBA	TBA	TBA	TBA
24	600	28-1/4	718	19-1/4	489	2-3/4	70	8-3/4	222	TBA	TBA	TBA	TBA
30	750	34-3/4	883	24	610	3	76	-	-	TBA	TBA	TBA	TBA
36	900	41-1/4	1048	28-3/4	730	3-1/2	89	14	356	TBA	TBA	TBA	TBA
42	1050	48	1219	33-1/2	851	4-1/4	108	-	-	TBA	TBA	TBA	TBA
60	1500	68-3/8	1737	47-3/4	1213	6	152	-	-	TBA	TBA	TBA	TBA

Certified dimensional drawings are available upon request.
†This table reflects only the nearest metric equivalents.

Seat Material	Operating Temperature**	
	°F	°C
Buna-N	-20 to 250	-29 to 121
Viton	-20 to 400	-29 to 204
EPDM	-40 to 300	-40 to 149

**Subject to limitations of body material.

KECKLEY

TECHNICAL DATA
DIMENSIONS AND WEIGHTS

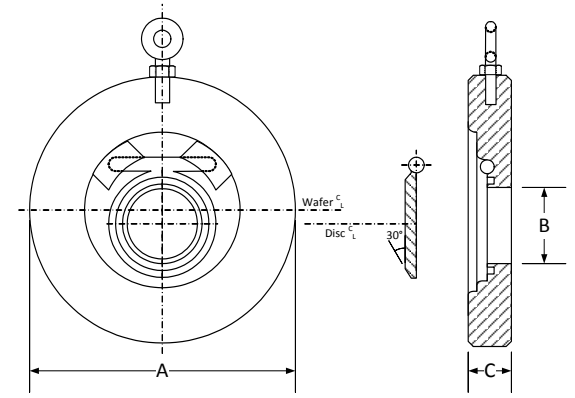

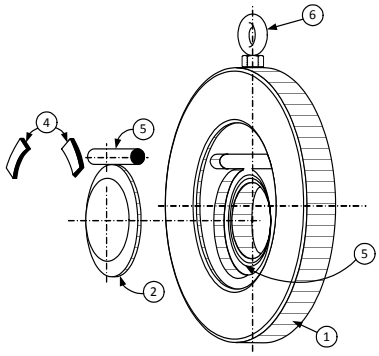

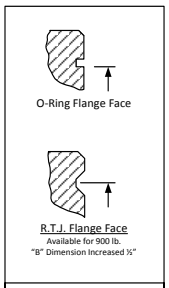

Flange Face Alternatives

Style SP & Style LP

Short Pattern & Long Pattern
Wafer Check Valve, 300 lb.
Hastelloy C276

PARTS LIST		
ITEM	DESCRIPTION	MATERIAL
1	Body	Hastelloy C276
2	Disc	Hastelloy C276
3	Hinge pin	Stainless Steel (302)
4	Pin retainer	Stainless Steel (302)
5	O-ring	Viton
6	Eye bolt w/ hex nut	Carbon Steel (ASTM A 105)

Above "Standard" Product Number for Short Pattern– **SP4R-HC-HC4**
Above "Standard" Product Number for Long Pattern– **LP4R-HC-HC4**
Other Options - Reference C2 for available materials.
Specify application and conditions so proper material grade can be supplied.

SIZE		DIMENSIONS								WEIGHTS			
		A		B		C							
		Short & Long		Short & Long		Short		Long		Short		Long	
in	mm	in	mm	in	mm	in	mm	in	mm	lbs	kgs	lbs	kgs
2	50	4-3/8	111	1-1/8	29	3/4	19	2-3/8	60	3	1	12	5
2-1/2	65	5-1/8	130	1-3/8	35	3/4	19	2-5/8	67	4	2	15	7
3	80	5-7/8	149	1-3/4	44	3/4	19	2-7/8	73	6	3	18	8
4	100	7-1/8	181	2-5/8	67	3/4	19	2-7/8	73	7	3	25	11
6	150	9-7/8	251	4-5/8	117	7/8	22	3-7/8	98	15	7	58	26
8	200	12-1/8	308	6	152	1-1/8	29	5	127	29	13	120	54
10	250	14-1/4	362	7-3/4	197	1-1/2	38	5-3/4	146	60	27	180	82
12	300	16-5/8	422	9-1/2	241	2	51	7-1/8	181	95	43	235	107
14	350	19-1/8	486	10-1/2	267	2	51	8-3/4	222	TBA	TBA	TBA	TBA
16	400	21-1/4	540	12-1/2	318	2	51	9-1/8	232	TBA	TBA	TBA	TBA
18	450	23-1/2	597	14	356	3	76	10-3/8	264	TBA	TBA	TBA	TBA
20	500	25-3/4	654	16	406	3-1/4	83	11-1/2	292	TBA	TBA	TBA	TBA
24	600	30-1/2	775	19-1/4	489	3-3/4	95	12-1/2	318	TBA	TBA	TBA	TBA
30	750	37-1/2	953	24	610	4-3/4	121	-	-	TBA	TBA	TBA	TBA
36	900	44	1118	28-3/4	730	5-3/4	146	-	-	TBA	TBA	TBA	TBA
42	1050	50-3/4	1289	33-1/2	851	6	152	-	-	TBA	TBA	TBA	TBA

Certified dimensional drawings are available upon request.
†This table reflects only the nearest metric equivalents.

Seat Material	Operating Temperature**	
	°F	°C
Buna-N	-20 to 250	-29 to 121
Viton	-20 to 400	-29 to 204
EPDM	-40 to 300	-40 to 149

**Subject to limitations of body material.

KECKLEY

TECHNICAL DATA
DIMENSIONS AND WEIGHTS

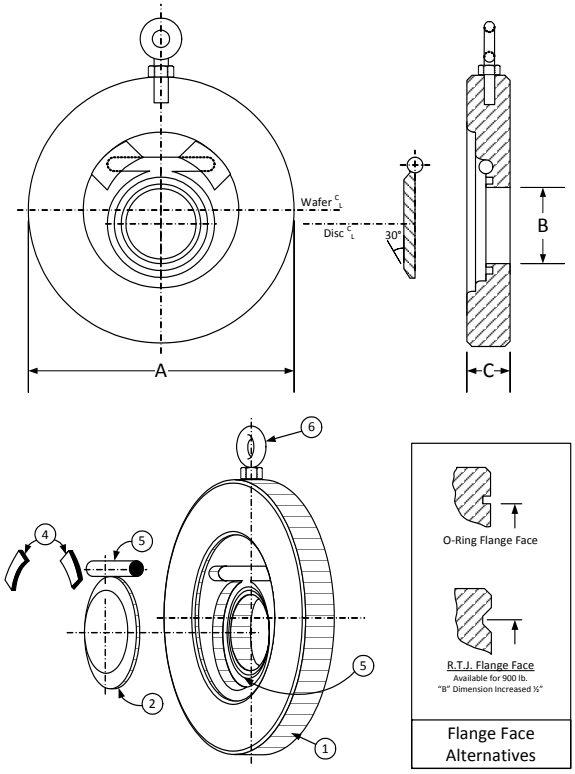

Style SP & Style LP

Short Pattern & Long Pattern
Wafer Check Valve, 600 lb.
Hastelloy C276

PARTS LIST		
ITEM	DESCRIPTION	MATERIAL
1	Body	Hastelloy C276
2	Disc	Hastelloy C276
3	Hinge pin	Stainless Steel (302)
4	Pin retainer	Stainless Steel (302)
5	O-ring	Viton
6	Eye bolt w/ hex nut	Carbon Steel (ASTM A 105)

Above "Standard" Product Number for Short Pattern– **SP5R-HC-HC4**
Above "Standard" Product Number for Long Pattern– **LP5R-HC-HC4**
Other Options - Reference C2 for available materials.
Specify application and conditions so proper material grade can be supplied.

SIZE		DIMENSIONS								WEIGHTS			
		A		B		C							
		Short & Long		Short & Long		Short		Long		Short		Long	
in	mm	in	mm	in	mm	in	mm	in	mm	lbs	kgs	lbs	kgs
2	50	4-3/8	111	1	25	3/4	19	2-3/8	60	4	2	12	5
2-1/2	65	5-1/8	130	1-3/8	35	3/4	19	2-5/8	67	6	3	15	7
3	80	5-7/8	149	1-3/4	44	3/4	19	2-7/8	73	7	3	18	8
4	100	7-5/8	194	2-5/8	67	7/8	22	3-1/8	79	12	5	25	11
6	150	10-1/2	267	4	102	1-1/8	29	5-3/8	137	24	11	70	32
8	200	12-5/8	321	5	127	1-1/2	38	6-1/2	165	57	26	160	73
10	250	15-3/4	400	6-7/8	175	2-1/4	57	8-3/8	213	131	59	200	91
12	300	18	457	8-1/2	216	2-3/8	60	9	229	234	106	265	120
14	350	19-3/8	492	9-1/2	241	2-3/8	60	10-3/4	273	TBA	TBA	TBA	TBA
16	400	22-1/4	565	11	279	2-7/8	73	12	305	TBA	TBA	TBA	TBA
18	450	24-1/8	613	12-1/2	318	3-1/8	79	14-1/4	362	TBA	TBA	TBA	TBA
20	500	26-7/8	683	14-1/4	362	3-5/8	92	14-1/2	368	TBA	TBA	TBA	TBA
24	600	31-1/8	791	17-3/8	441	4-1/4	108	-	-	TBA	TBA	TBA	TBA
26	650	34-1/8	867	19	483	4-3/4	121	17-1/4	438	TBA	TBA	TBA	TBA
30	750	38-1/4	972	22	559	5-1/4	133	-	-	TBA	TBA	TBA	TBA
36	900	44-1/2	1130	26-1/2	673	6-1/4	159	-	-	TBA	TBA	TBA	TBA

Certified dimensional drawings are available upon request.
†This table reflects only the nearest metric equivalents.

Seat Material	Operating Temperature**	
	°F	°C
Buna-N	-20 to 250	-29 to 121
Viton	-20 to 400	-29 to 204
EPDM	-40 to 300	-40 to 149

**Subject to limitations of body material.

KECKLEY

TECHNICAL DATA
DIMENSIONS AND WEIGHTS

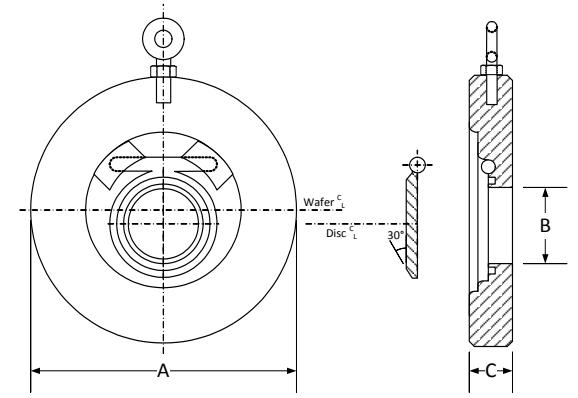

Style SP & Style LP

Short Pattern & Long Pattern
Wafer Check Valve, 900 lb.
Hastelloy C276

PARTS LIST		
ITEM	DESCRIPTION	MATERIAL
1	Body	Hastelloy C276
2	Disc	Hastelloy C276
3	Hinge pin	Stainless Steel (302)
4	Pin retainer	Stainless Steel (302)
5	O-ring	Viton
6	Eye bolt w/ hex nut	Carbon Steel (ASTM A 105)

Above "Standard" Product Number for Short Pattern– **SP6R-HC-HC4**
Above "Standard" Product Number for Long Pattern– **LP6R-HC-HC4**
Other Options - Reference C2 for available materials.
Specify application and conditions so proper material grade can be supplied.

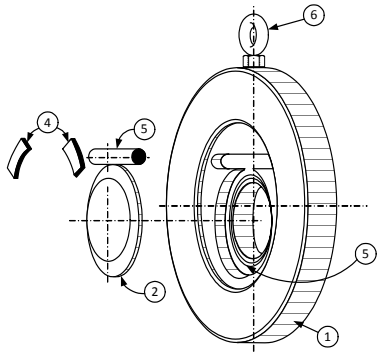

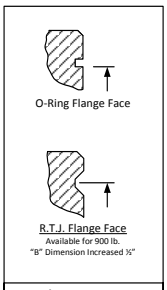

Flange Face Alternatives

SIZE		DIMENSIONS								WEIGHTS			
		A		B		C							
		Short & Long		Short & Long		Short		Long		Short		Long	
in	mm	in	mm	in	mm	in	mm	in	mm	lbs	kgs	lbs	kgs
2	50	5-5/8	143	1	25	3/4	19	2-3/4	70	4	2	14	6
2-1/2	65	6-1/2	165	1-3/8	35	3/4	19	3-1/4	83	6	3	16	7
3	80	6-5/8	168	1-3/4	44	3/4	19	3-1/4	83	7	3	22	10
4	100	8-1/8	206	2-5/8	67	7/8	22	4	102	12	5	30	14
6	150	11-3/8	289	4	102	1-3/8	35	6-1/4	159	24	11	82	37
8	200	14-1/8	359	5	127	1-3/4	44	8-1/8	206	57	26	188	85
10	250	17-1/8	435	6-7/8	175	2-1/4	57	9-1/2	241	131	59	225	102
12	300	19-5/8	498	8-1/2	216	2-3/8	60	11-1/2	292	234	106	295	134
14	350	20-1/2	521	9-1/2	241	2-3/4	70	14	356	TBA	TBA	TBA	TBA
16	400	22-5/8	575	11	279	3-1/4	83	15-1/8	384	TBA	TBA	TBA	TBA
18	450	25-1/8	638	12-1/2	318	3-3/4	95	17-3/4	451	TBA	TBA	TBA	TBA
20	500	27-1/2	699	14-1/4	362	4-1/4	108	17-3/4	451	TBA	TBA	TBA	TBA
24	600	33	838	17-3/8	441	5-1/4	133	-	-	TBA	TBA	TBA	TBA
26	650	34-3/4	883	19	483	5-3/4	146	19-1/2	495	TBA	TBA	TBA	TBA
30	750	39-3/4	1010	22	559	6-3/4	171	-	-	TBA	TBA	TBA	TBA
36	900	47-1/4	1200	26-1/2	673	8	203	-	-	TBA	TBA	TBA	TBA

Certified dimensional drawings are available upon request.
†This table reflects only the nearest metric equivalents.

Seat Material	Operating Temperature**	
	°F	°C
Buna-N	-20 to 250	-29 to 121
Viton	-20 to 400	-29 to 204
EPDM	-40 to 300	-40 to 149

**Subject to limitations of body material.

KECKLEY

TECHNICAL DATA
DIMENSIONS AND WEIGHTS

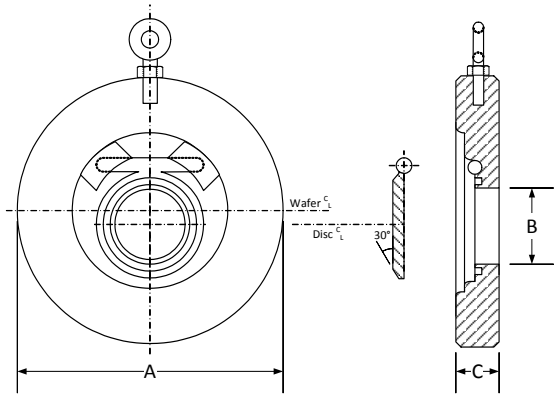

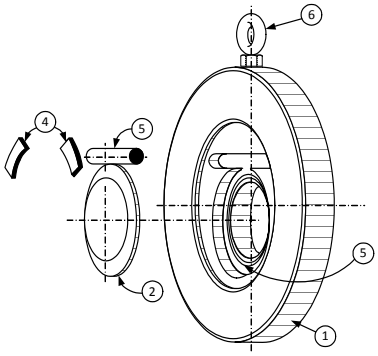

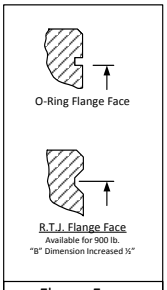

Flange Face Alternatives

Style SP & Style LP

Short Pattern & Long Pattern
Wafer Check Valve, 1500 lb.
Hastelloy C276

PARTS LIST		
ITEM	DESCRIPTION	MATERIAL
1	Body	Hastelloy C276
2	Disc	Hastelloy C276
3	Hinge pin	Stainless Steel (302)
4	Pin retainer	Stainless Steel (302)
5	O-ring	Viton
6	Eye bolt w/ hex nut	Carbon Steel (ASTM A 105)

Above "Standard" Product Number for Short Pattern– **SP7R-HC-HC4**
Above "Standard" Product Number for Long Pattern– **LP7R-HC-HC4**
Other Options - Reference C2 for available materials.
Specify application and conditions so proper material grade can be supplied.

SIZE		DIMENSIONS								WEIGHTS			
		A		B		C							
		Short & Long		Short & Long		Short		Long		Short		Long	
in	mm	in	mm	in	mm	in	mm	in	mm	lbs	kgs	lbs	kgs
1-1/2	40	3-7/8	98	7/8	22	3/4	19	2-3/4	70	4	2	14	6
2	50	5-5/8	143	1	25	3/4	19	2-3/4	70	4	2	14	6
3	80	6-7/8	175	1-3/4	44	7/8	22	3-1/4	83	9	4	24	11
4	100	8-1/4	210	2-1/4	57	1-1/4	32	4	102	19	9	35	16
6	150	11-1/8	283	3-3/4	95	1-3/4	44	6-1/4	159	49	22	92	42
8	200	13-7/8	352	4-3/4	121	2-1/4	57	8-1/8	206	74	34	195	88
10	250	17-1/8	435	6-3/4	171	2-7/8	73	9-3/4	248	158	72	245	111
12	300	20-1/2	521	8-1/2	216	3-3/8	86	12	305	255	116	330	150

Certified dimensional drawings are available upon request.
†This table reflects only the nearest metric equivalents.

Seat Material	Operating Temperature**	
	°F	°C
Buna-N	-20 to 250	-29 to 121
Viton	-20 to 400	-29 to 204
EPDM	-40 to 300	-40 to 149

**Subject to limitations of body material.

KECKLEY

TECHNICAL DATA
DIMENSIONS AND WEIGHTS

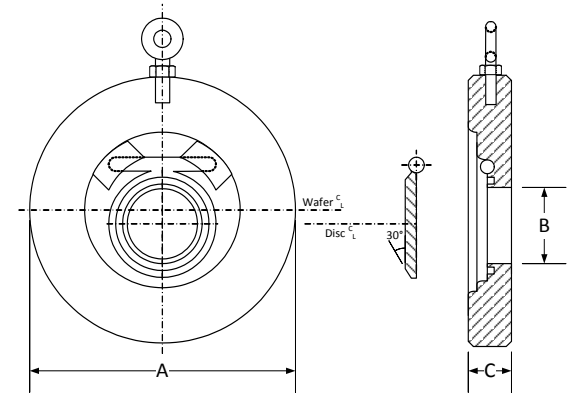

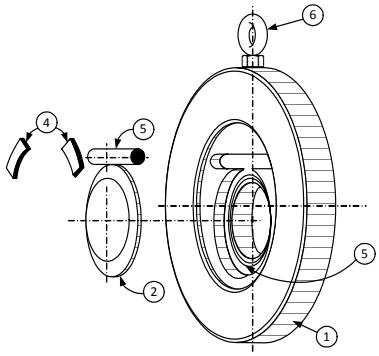

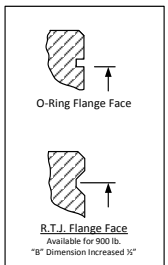

Flange Face Alternatives

Style SP & Style LP

Short Pattern & Long Pattern
Wafer Check Valve, 150 lb.
Monel

PARTS LIST		
ITEM	DESCRIPTION	MATERIAL
1	Body	Monel
2	Disc	Monel
3	Hinge pin	Stainless Steel (302)
4	Pin retainer	Stainless Steel (302)
5	O-ring	Viton
6	Eye bolt w/ hex nut	Carbon Steel (ASTM A 105)

Above "Standard" Product Number for Short Pattern– **SP2R-ML-ML4**
Above "Standard" Product Number for Long Pattern– **LP2R-ML-ML4**
Other Options - Reference C2 for available materials.
Specify application and conditions so proper material grade can be supplied.

SIZE		DIMENSIONS								WEIGHTS			
		A		B		C							
		Short & Long		Short & Long		Short		Long		Short		Long	
in	mm	in	mm	in	mm	in	mm	in	mm	lbs	kgs	lbs	kgs
1-1/2	40	3-3/8	86	7/8	22	13/16	21	2-3/8	60	3	1	10	5
2	50	4-1/8	105	1-1/8	29	3/4	19	2-3/8	60	3	1	10	5
2-1/2	65	4-7/8	124	1-3/8	35	3/4	19	2-5/8	67	4	2	13	6
3	80	5-3/8	137	1-3/4	44	3/4	19	2-7/8	73	5	2	15	7
4	100	6-7/8	175	2-5/8	67	3/4	19	2-7/8	73	6	3	20	9
6	150	8-3/4	222	4-5/8	117	1	25	3-7/8	98	12	5	48	22
8	200	11	279	6	152	1-1/8	29	5	127	24	11	100	45
10	250	13-3/8	340	7-3/4	197	1-1/8	29	5-3/4	146	32	15	160	73
12	300	16-1/8	410	9-1/2	241	1-1/2	38	7-1/8	181	62	28	215	98
14	350	17-3/4	451	10-1/2	267	1-3/4	44	7-1/4	184	TBA	TBA	TBA	TBA
16	400	20-1/4	514	12-1/2	318	2	51	7-1/2	191	TBA	TBA	TBA	TBA
18	450	21-5/8	549	14	356	2-1/4	57	8	203	TBA	TBA	TBA	TBA
20	500	23-7/8	606	16	406	2-1/2	64	8-3/4	222	TBA	TBA	TBA	TBA
24	600	28-1/4	718	19-1/4	489	2-3/4	70	8-3/4	222	TBA	TBA	TBA	TBA
30	750	34-3/4	883	24	610	3	76	-	-	TBA	TBA	TBA	TBA
36	900	41-1/4	1048	28-3/4	730	3-1/2	89	14	356	TBA	TBA	TBA	TBA
42	1050	48	1219	33-1/2	851	4-1/4	108	-	-	TBA	TBA	TBA	TBA
60	1500	68-3/8	1737	47-3/4	1213	6	152	-	-	TBA	TBA	TBA	TBA

Certified dimensional drawings are available upon request.
†This table reflects only the nearest metric equivalents.

Seat Material	Operating Temperature**	
	°F	°C
Buna-N	-20 to 250	-29 to 121
Viton	-20 to 400	-29 to 204
EPDM	-40 to 300	-40 to 149

**Subject to limitations of body material.

KECKLEY

TECHNICAL DATA
DIMENSIONS AND WEIGHTS

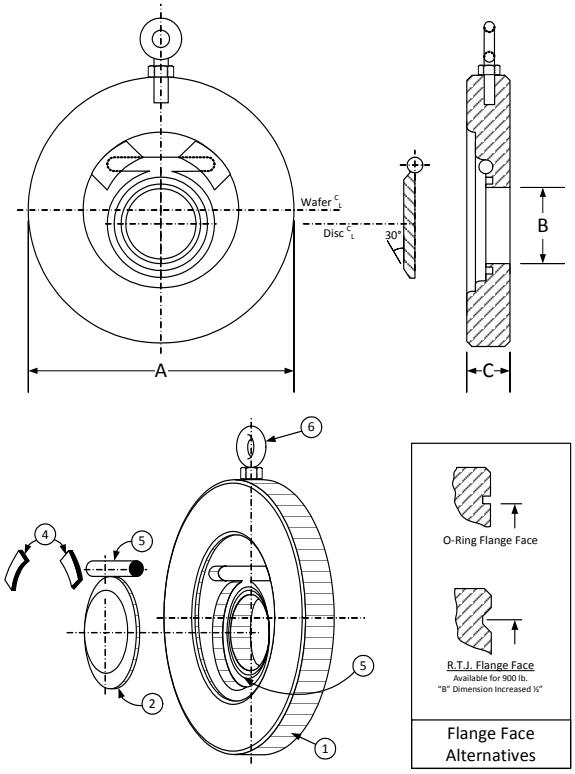

Style SP & Style LP

Short Pattern & Long Pattern
Wafer Check Valve, 300 lb.
Monel

PARTS LIST		
ITEM	DESCRIPTION	MATERIAL
1	Body	Monel
2	Disc	Monel
3	Hinge pin	Stainless Steel (302)
4	Pin retainer	Stainless Steel (302)
5	O-ring	Viton
6	Eye bolt w/ hex nut	Carbon Steel (ASTM A 105)

Above "Standard" Product Number for Short Pattern– **SP4R-ML-ML4**
Above "Standard" Product Number for Long Pattern– **LP4R-ML-ML4**
Other Options - Reference C2 for available materials.
Specify application and conditions so proper material grade can be supplied.

SIZE		DIMENSIONS								WEIGHTS			
		A		B		C							
		Short & Long		Short & Long		Short		Long		Short		Long	
in	mm	in	mm	in	mm	in	mm	in	mm	lbs	kgs	lbs	kgs
2	50	4-3/8	111	1-1/8	29	3/4	19	2-3/8	60	3	1	12	5
2-1/2	65	5-1/8	130	1-3/8	35	3/4	19	2-5/8	67	4	2	15	7
3	80	5-7/8	149	1-3/4	44	3/4	19	2-7/8	73	6	3	18	8
4	100	7-1/8	181	2-5/8	67	3/4	19	2-7/8	73	7	3	25	11
6	150	9-7/8	251	4-5/8	117	7/8	22	3-7/8	98	15	7	58	26
8	200	12-1/8	308	6	152	1-1/8	29	5	127	29	13	120	54
10	250	14-1/4	362	7-3/4	197	1-1/2	38	5-3/4	146	60	27	180	82
12	300	16-5/8	422	9-1/2	241	2	51	7-1/8	181	95	43	235	107
14	350	19-1/8	486	10-1/2	267	2	51	8-3/4	222	TBA	TBA	TBA	TBA
16	400	21-1/4	540	12-1/2	318	2	51	9-1/8	232	TBA	TBA	TBA	TBA
18	450	23-1/2	597	14	356	3	76	10-3/8	264	TBA	TBA	TBA	TBA
20	500	25-3/4	654	16	406	3-1/4	83	11-1/2	292	TBA	TBA	TBA	TBA
24	600	30-1/2	775	19-1/4	489	3-3/4	95	12-1/2	318	TBA	TBA	TBA	TBA
30	750	37-1/2	953	24	610	4-3/4	121	-	-	TBA	TBA	TBA	TBA
36	900	44	1118	28-3/4	730	5-3/4	146	-	-	TBA	TBA	TBA	TBA
42	1050	50-3/4	1289	33-1/2	851	6	152	-	-	TBA	TBA	TBA	TBA

Certified dimensional drawings are available upon request.
†This table reflects only the nearest metric equivalents.

Seat Material	Operating Temperature**	
	°F	°C
Buna-N	-20 to 250	-29 to 121
Viton	-20 to 400	-29 to 204
EPDM	-40 to 300	-40 to 149

**Subject to limitations of body material.

KECKLEY

TECHNICAL DATA
DIMENSIONS AND WEIGHTS

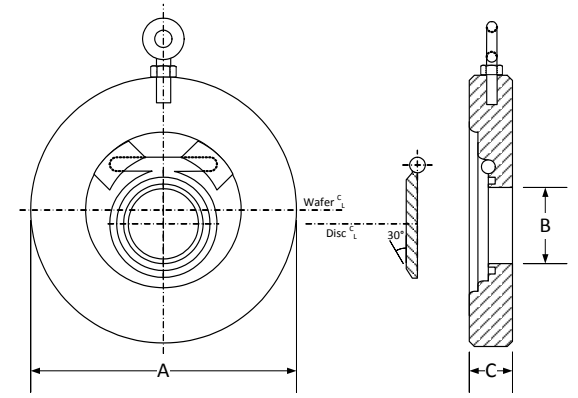

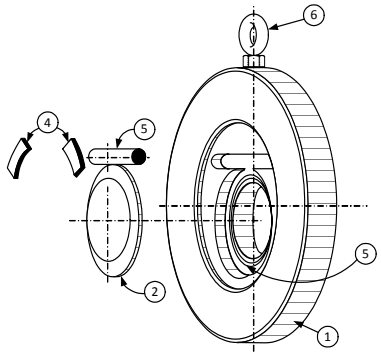

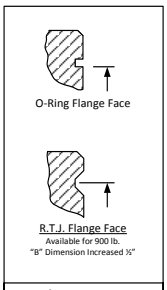

Flange Face Alternatives

Style SP & Style LP

Short Pattern & Long Pattern
Wafer Check Valve, 600 lb.
Monel

PARTS LIST		
ITEM	DESCRIPTION	MATERIAL
1	Body	Monel
2	Disc	Monel
3	Hinge pin	Stainless Steel (302)
4	Pin retainer	Stainless Steel (302)
5	O-ring	Viton
6	Eye bolt w/ hex nut	Carbon Steel (ASTM A 105)

Above "Standard" Product Number for Short Pattern– **SP5R-ML-ML4**
Above "Standard" Product Number for Long Pattern– **LP5R-ML-ML4**
Other Options - Reference C2 for available materials.
Specify application and conditions so proper material grade can be supplied.

SIZE		DIMENSIONS								WEIGHTS			
		A		B		C							
		Short & Long		Short & Long		Short		Long		Short		Long	
in	mm	in	mm	in	mm	in	mm	in	mm	lbs	kgs	lbs	kgs
2	50	4-3/8	111	1	25	3/4	19	2-3/8	60	4	2	12	5
2-1/2	65	5-1/8	130	1-3/8	35	3/4	19	2-5/8	67	6	3	15	7
3	80	5-7/8	149	1-3/4	44	3/4	19	2-7/8	73	7	3	18	8
4	100	7-5/8	194	2-5/8	67	7/8	22	3-1/8	79	12	5	25	11
6	150	10-1/2	267	4	102	1-1/8	29	5-3/8	137	24	11	70	32
8	200	12-5/8	321	5	127	1-1/2	38	6-1/2	165	57	26	160	73
10	250	15-3/4	400	6-7/8	175	2-1/4	57	8-3/8	213	131	59	200	91
12	300	18	457	8-1/2	216	2-3/8	60	9	229	234	106	265	120
14	350	19-3/8	492	9-1/2	241	2-3/8	60	10-3/4	273	TBA	TBA	TBA	TBA
16	400	22-1/4	565	11	279	2-7/8	73	12	305	TBA	TBA	TBA	TBA
18	450	24-1/8	613	12-1/2	318	3-1/8	79	14-1/4	362	TBA	TBA	TBA	TBA
20	500	26-7/8	683	14-1/4	362	3-5/8	92	14-1/2	368	TBA	TBA	TBA	TBA
24	600	31-1/8	791	17-3/8	441	4-1/4	108	-	-	TBA	TBA	TBA	TBA
26	650	34-1/8	867	19	483	4-3/4	121	17-1/4	438	TBA	TBA	TBA	TBA
30	750	38-1/4	972	22	559	5-1/4	133	-	-	TBA	TBA	TBA	TBA
36	900	44-1/2	1130	26-1/2	673	6-1/4	159	-	-	TBA	TBA	TBA	TBA

Certified dimensional drawings are available upon request.
†This table reflects only the nearest metric equivalents.

Seat Material	Operating Temperature**	
	°F	°C
Buna-N	-20 to 250	-29 to 121
Viton	-20 to 400	-29 to 204
EPDM	-40 to 300	-40 to 149

**Subject to limitations of body material.

KECKLEY

TECHNICAL DATA
DIMENSIONS AND WEIGHTS

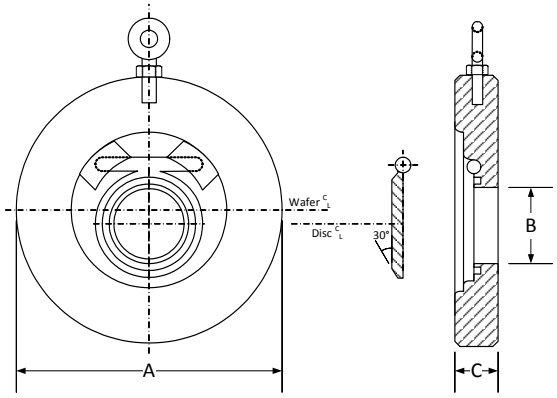

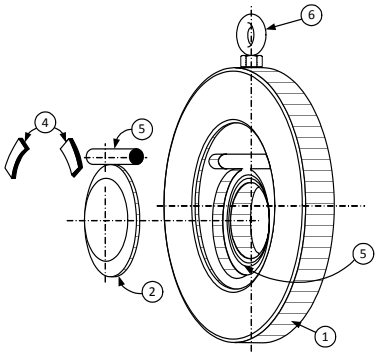

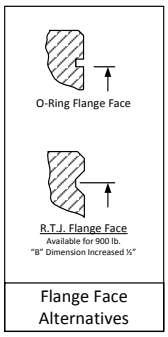

Style SP & Style LP

Short Pattern & Long Pattern
Wafer Check Valve, 900 lb.
Monel

PARTS LIST		
ITEM	DESCRIPTION	MATERIAL
1	Body	Monel
2	Disc	Monel
3	Hinge pin	Stainless Steel (302)
4	Pin retainer	Stainless Steel (302)
5	O-ring	Viton
6	Eye bolt w/ hex nut	Carbon Steel (ASTM A 105)

Above "Standard" Product Number for Short Pattern– **SP6R-ML-ML4**
Above "Standard" Product Number for Long Pattern– **LP6R-ML-ML4**
Other Options - Reference C2 for available materials.
Specify application and conditions so proper material grade can be supplied.

SIZE		DIMENSIONS								WEIGHTS			
		A		B		C							
		Short & Long		Short & Long		Short		Long		Short		Long	
in	mm	in	mm	in	mm	in	mm	in	mm	lbs	kgs	lbs	kgs
2	50	5-5/8	143	1	25	3/4	19	2-3/4	70	4	2	14	6
2-1/2	65	6-1/2	165	1-3/8	35	3/4	19	3-1/4	83	6	3	16	7
3	80	6-5/8	168	1-3/4	44	3/4	19	3-1/4	83	7	3	22	10
4	100	8-1/8	206	2-5/8	67	7/8	22	4	102	12	5	30	14
6	150	11-3/8	289	4	102	1-3/8	35	6-1/4	159	24	11	82	37
8	200	14-1/8	359	5	127	1-3/4	44	8-1/8	206	57	26	188	85
10	250	17-1/8	435	6-7/8	175	2-1/4	57	9-1/2	241	131	59	225	102
12	300	19-5/8	498	8-1/2	216	2-3/8	60	11-1/2	292	234	106	295	134
14	350	20-1/2	521	9-1/2	241	2-3/4	70	14	356	TBA	TBA	TBA	TBA
16	400	22-5/8	575	11	279	3-1/4	83	15-1/8	384	TBA	TBA	TBA	TBA
18	450	25-1/8	638	12-1/2	318	3-3/4	95	17-3/4	451	TBA	TBA	TBA	TBA
20	500	27-1/2	699	14-1/4	362	4-1/4	108	17-3/4	451	TBA	TBA	TBA	TBA
24	600	33	838	17-3/8	441	5-1/4	133	-	-	TBA	TBA	TBA	TBA
26	650	34-3/4	883	19	483	5-3/4	146	19-1/2	495	TBA	TBA	TBA	TBA
30	750	39-3/4	1010	22	559	6-3/4	171	-	-	TBA	TBA	TBA	TBA
36	900	47-1/4	1200	26-1/2	673	8	203	-	-	TBA	TBA	TBA	TBA

Certified dimensional drawings are available upon request.
†This table reflects only the nearest metric equivalents.

Seat Material	Operating Temperature**	
	°F	°C
Buna-N	-20 to 250	-29 to 121
Viton	-20 to 400	-29 to 204
EPDM	-40 to 300	-40 to 149

**Subject to limitations of body material.

KECKLEY

TECHNICAL DATA
DIMENSIONS AND WEIGHTS

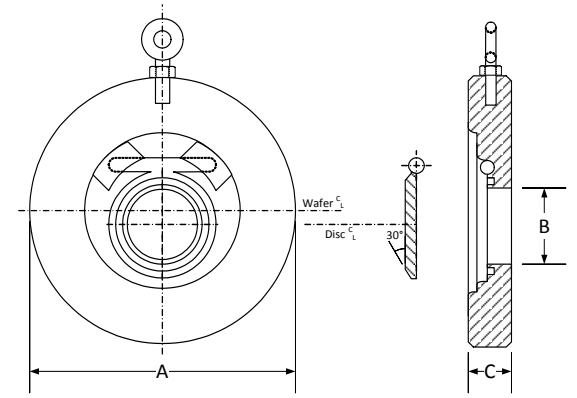

Style SP & Style LP

Short Pattern & Long Pattern
Wafer Check Valve, 1500 lb.
Monel

PARTS LIST		
ITEM	DESCRIPTION	MATERIAL
1	Body	Monel
2	Disc	Monel
3	Hinge pin	Stainless Steel (302)
4	Pin retainer	Stainless Steel (302)
5	O-ring	Viton
6	Eye bolt w/ hex nut	Carbon Steel (ASTM A 105)

Above "Standard" Product Number for Short Pattern– **SP7R-ML-ML4**
Above "Standard" Product Number for Long Pattern– **LP7R-ML-ML4**
Other Options - Reference C2 for available materials.
Specify application and conditions so proper material grade can be supplied.

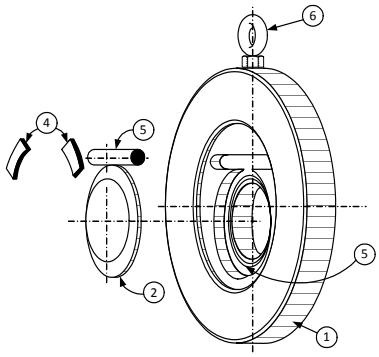

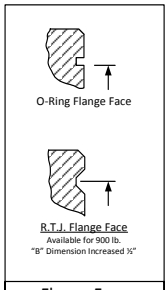

Flange Face Alternatives

SIZE		DIMENSIONS								WEIGHTS			
		A		B		C							
		Short & Long		Short & Long		Short		Long		Short		Long	
in	mm	in	mm	in	mm	in	mm	in	mm	lbs	kgs	lbs	kgs
1-1/2	40	3-7/8	98	7/8	22	3/4	19	2-3/4	70	4	2	14	6
2	50	5-5/8	143	1	25	3/4	19	2-3/4	70	4	2	14	6
3	80	6-7/8	175	1-3/4	44	7/8	22	3-1/4	83	9	4	24	11
4	100	8-1/4	210	2-1/4	57	1-1/4	32	4	102	19	9	35	16
6	150	11-1/8	283	3-3/4	95	1-3/4	44	6-1/4	159	49	22	92	42
8	200	13-7/8	352	4-3/4	121	2-1/4	57	8-1/8	206	74	34	195	88
10	250	17-1/8	435	6-3/4	171	2-7/8	73	9-3/4	248	158	72	245	111
12	300	20-1/2	521	8-1/2	216	3-3/8	86	12	305	255	116	330	150

Certified dimensional drawings are available upon request.
†This table reflects only the nearest metric equivalents.

Seat Material	Operating Temperature**	
	°F	°C
Buna-N	-20 to 250	-29 to 121
Viton	-20 to 400	-29 to 204
EPDM	-40 to 300	-40 to 149

**Subject to limitations of body material.

KECKLEY COMPANY • 3400 Cleveland Street • Skokie, Illinois 60076 1-800-KECKLEY

KECKLEY

TECHNICAL DATA
DIMENSIONS AND WEIGHTS

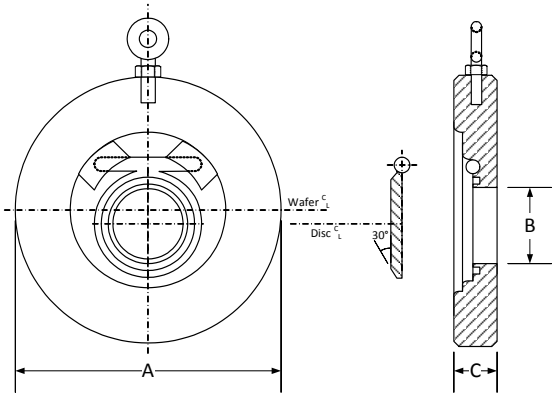

Style SP & Style LP

Short Pattern & Long Pattern
Wafer Check Valve, 150 lb.
Titanium

PARTS LIST		
ITEM	DESCRIPTION	MATERIAL
1	Body	Titanium
2	Disc	Titanium
3	Hinge pin	Stainless Steel (302)
4	Pin retainer	Stainless Steel (302)
5	O-ring	Viton
6	Eye bolt w/ hex nut	Carbon Steel (ASTM A 105)

Above "Standard" Product Number for Short Pattern– **SP2R-TI-TI4**
Above "Standard" Product Number for Long Pattern– **LP2R-TI-TI4**
Other Options - Reference C2 for available materials.
Specify application and conditions so proper material grade can be supplied.

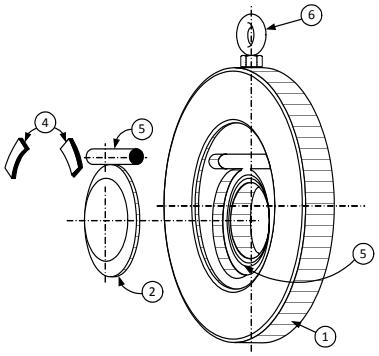

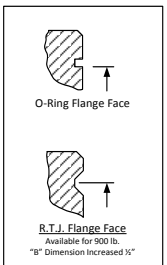

Flange Face Alternatives

SIZE		DIMENSIONS								WEIGHTS			
		A		B		C							
		Short & Long		Short & Long		Short		Long		Short		Long	
in	mm	in	mm	in	mm	in	mm	in	mm	lbs	kgs	lbs	kgs
1-1/2	40	3-3/8	86	7/8	22	13/16	21	2-3/8	60	3	1	10	5
2	50	4-1/8	105	1-1/8	29	3/4	19	2-3/8	60	3	1	10	5
2-1/2	65	4-7/8	124	1-3/8	35	3/4	19	2-5/8	67	4	2	13	6
3	80	5-3/8	137	1-3/4	44	3/4	19	2-7/8	73	5	2	15	7
4	100	6-7/8	175	2-5/8	67	3/4	19	2-7/8	73	6	3	20	9
6	150	8-3/4	222	4-5/8	117	1	25	3-7/8	98	12	5	48	22
8	200	11	279	6	152	1-1/8	29	5	127	24	11	100	45
10	250	13-3/8	340	7-3/4	197	1-1/8	29	5-3/4	146	32	15	160	73
12	300	16-1/8	410	9-1/2	241	1-1/2	38	7-1/8	181	62	28	215	98
14	350	17-3/4	451	10-1/2	267	1-3/4	44	7-1/4	184	TBA	TBA	TBA	TBA
16	400	20-1/4	514	12-1/2	318	2	51	7-1/2	191	TBA	TBA	TBA	TBA
18	450	21-5/8	549	14	356	2-1/4	57	8	203	TBA	TBA	TBA	TBA
20	500	23-7/8	606	16	406	2-1/2	64	8-3/4	222	TBA	TBA	TBA	TBA
24	600	28-1/4	718	19-1/4	489	2-3/4	70	8-3/4	222	TBA	TBA	TBA	TBA
30	750	34-3/4	883	24	610	3	76	-	-	TBA	TBA	TBA	TBA
36	900	41-1/4	1048	28-3/4	730	3-1/2	89	14	356	TBA	TBA	TBA	TBA
42	1050	48	1219	33-1/2	851	4-1/4	108	-	-	TBA	TBA	TBA	TBA
60	1500	68-3/8	1737	47-3/4	1213	6	152	-	-	TBA	TBA	TBA	TBA

Certified dimensional drawings are available upon request.
†This table reflects only the nearest metric equivalents.

Seat Material	Operating Temperature**	
	°F	°C
Buna-N	-20 to 250	-29 to 121
Viton	-20 to 400	-29 to 204
EPDM	-40 to 300	-40 to 149

**Subject to limitations of body material.

KECKLEY

TECHNICAL DATA
DIMENSIONS AND WEIGHTS

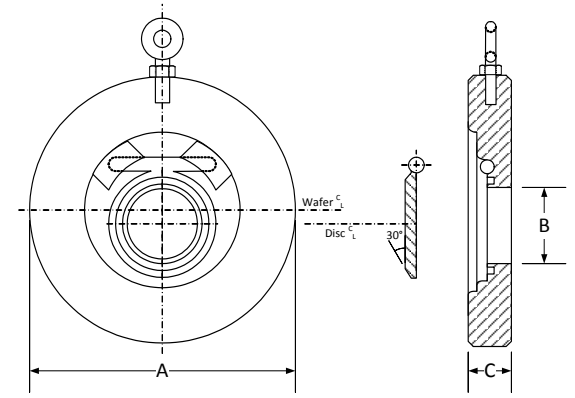

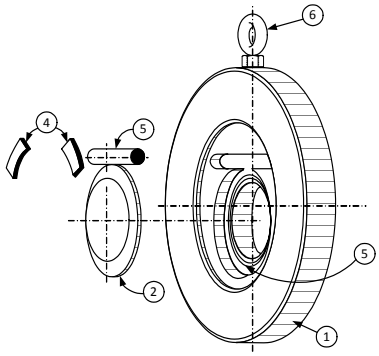

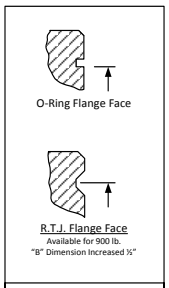

Flange Face Alternatives

Style SP & Style LP

Short Pattern & Long Pattern
Wafer Check Valve, 300 lb.
Titanium

PARTS LIST		
ITEM	DESCRIPTION	MATERIAL
1	Body	Titanium
2	Disc	Titanium
3	Hinge pin	Stainless Steel (302)
4	Pin retainer	Stainless Steel (302)
5	O-ring	Viton
6	Eye bolt w/ hex nut	Carbon Steel (ASTM A 105)

Above "Standard" Product Number for Short Pattern– **SP4R-TI-TI4**
Above "Standard" Product Number for Long Pattern– **LP4R-TI-TI4**
Other Options - Reference C2 for available materials.
Specify application and conditions so proper material grade can be supplied.

SIZE		DIMENSIONS								WEIGHTS			
		A		B		C							
		Short & Long		Short & Long		Short		Long		Short		Long	
in	mm	in	mm	in	mm	in	mm	in	mm	lbs	kgs	lbs	kgs
2	50	4-3/8	111	1-1/8	29	3/4	19	2-3/8	60	3	1	12	5
2-1/2	65	5-1/8	130	1-3/8	35	3/4	19	2-5/8	67	4	2	15	7
3	80	5-7/8	149	1-3/4	44	3/4	19	2-7/8	73	6	3	18	8
4	100	7-1/8	181	2-5/8	67	3/4	19	2-7/8	73	7	3	25	11
6	150	9-7/8	251	4-5/8	117	7/8	22	3-7/8	98	15	7	58	26
8	200	12-1/8	308	6	152	1-1/8	29	5	127	29	13	120	54
10	250	14-1/4	362	7-3/4	197	1-1/2	38	5-3/4	146	60	27	180	82
12	300	16-5/8	422	9-1/2	241	2	51	7-1/8	181	95	43	235	107
14	350	19-1/8	486	10-1/2	267	2	51	8-3/4	222	TBA	TBA	TBA	TBA
16	400	21-1/4	540	12-1/2	318	2	51	9-1/8	232	TBA	TBA	TBA	TBA
18	450	23-1/2	597	14	356	3	76	10-3/8	264	TBA	TBA	TBA	TBA
20	500	25-3/4	654	16	406	3-1/4	83	11-1/2	292	TBA	TBA	TBA	TBA
24	600	30-1/2	775	19-1/4	489	3-3/4	95	12-1/2	318	TBA	TBA	TBA	TBA
30	750	37-1/2	953	24	610	4-3/4	121	-	-	TBA	TBA	TBA	TBA
36	900	44	1118	28-3/4	730	5-3/4	146	-	-	TBA	TBA	TBA	TBA
42	1050	50-3/4	1289	33-1/2	851	6	152	-	-	TBA	TBA	TBA	TBA

Certified dimensional drawings are available upon request.
†This table reflects only the nearest metric equivalents.

Seat Material	Operating Temperature**	
	°F	°C
Buna-N	-20 to 250	-29 to 121
Viton	-20 to 400	-29 to 204
EPDM	-40 to 300	-40 to 149

**Subject to limitations of body material.

KECKLEY

TECHNICAL DATA
DIMENSIONS AND WEIGHTS

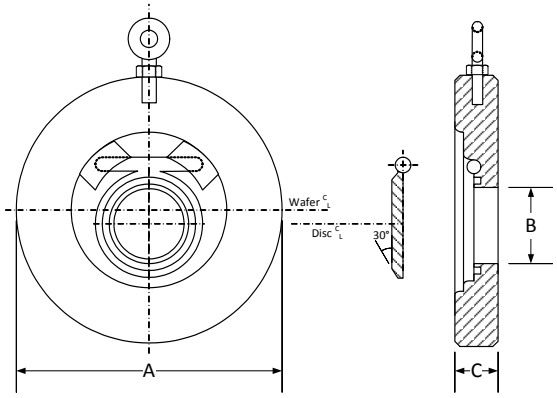

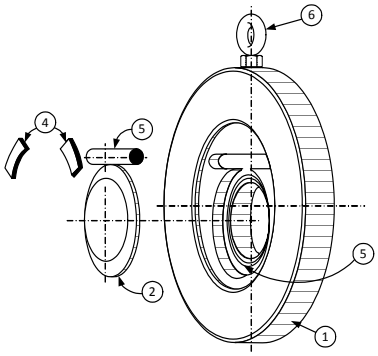

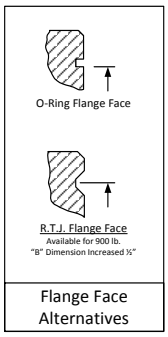

Style SP & Style LP

Short Pattern & Long Pattern
Wafer Check Valve, 600 lb.
Titanium

PARTS LIST		
ITEM	DESCRIPTION	MATERIAL
1	Body	Titanium
2	Disc	Titanium
3	Hinge pin	Stainless Steel (302)
4	Pin retainer	Stainless Steel (302)
5	O-ring	Viton
6	Eye bolt w/ hex nut	Carbon Steel (ASTM A 105)

Above "Standard" Product Number for Short Pattern– **SP5R-TI-TI4**
Above "Standard" Product Number for Long Pattern– **LP5R-TI-TI4**
Other Options - Reference C2 for available materials.
Specify application and conditions so proper material grade can be supplied.

SIZE		DIMENSIONS								WEIGHTS			
		A		B		C							
		Short & Long		Short & Long		Short		Long		Short		Long	
in	mm	in	mm	in	mm	in	mm	in	mm	lbs	kgs	lbs	kgs
2	50	4-3/8	111	1	25	3/4	19	2-3/8	60	4	2	12	5
2-1/2	65	5-1/8	130	1-3/8	35	3/4	19	2-5/8	67	6	3	15	7
3	80	5-7/8	149	1-3/4	44	3/4	19	2-7/8	73	7	3	18	8
4	100	7-5/8	194	2-5/8	67	7/8	22	3-1/8	79	12	5	25	11
6	150	10-1/2	267	4	102	1-1/8	29	5-3/8	137	24	11	70	32
8	200	12-5/8	321	5	127	1-1/2	38	6-1/2	165	57	26	160	73
10	250	15-3/4	400	6-7/8	175	2-1/4	57	8-3/8	213	131	59	200	91
12	300	18	457	8-1/2	216	2-3/8	60	9	229	234	106	265	120
14	350	19-3/8	492	9-1/2	241	2-3/8	60	10-3/4	273	TBA	TBA	TBA	TBA
16	400	22-1/4	565	11	279	2-7/8	73	12	305	TBA	TBA	TBA	TBA
18	450	24-1/8	613	12-1/2	318	3-1/8	79	14-1/4	362	TBA	TBA	TBA	TBA
20	500	26-7/8	683	14-1/4	362	3-5/8	92	14-1/2	368	TBA	TBA	TBA	TBA
24	600	31-1/8	791	17-3/8	441	4-1/4	108	-	-	TBA	TBA	TBA	TBA
26	650	34-1/8	867	19	483	4-3/4	121	17-1/4	438	TBA	TBA	TBA	TBA
30	750	38-1/4	972	22	559	5-1/4	133	-	-	TBA	TBA	TBA	TBA
36	900	44-1/2	1130	26-1/2	673	6-1/4	159	-	-	TBA	TBA	TBA	TBA

Certified dimensional drawings are available upon request.
†This table reflects only the nearest metric equivalents.

Seat Material	Operating Temperature**	
	°F	°C
Buna-N	-20 to 250	-29 to 121
Viton	-20 to 400	-29 to 204
EPDM	-40 to 300	-40 to 149

**Subject to limitations of body material.

KECKLEY

TECHNICAL DATA
DIMENSIONS AND WEIGHTS

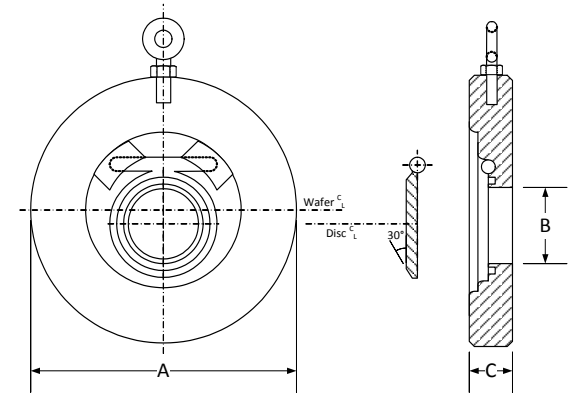

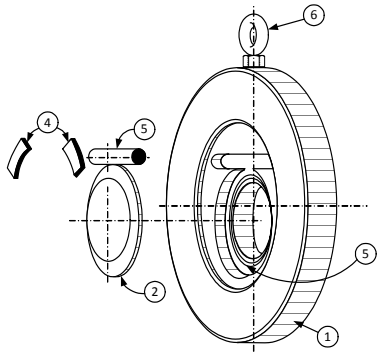

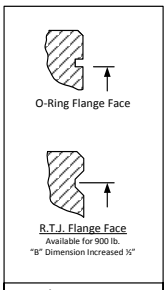

Flange Face Alternatives

Style SP & Style LP

Short Pattern & Long Pattern
Wafer Check Valve, 900 lb.
Titanium

PARTS LIST		
ITEM	DESCRIPTION	MATERIAL
1	Body	Titanium
2	Disc	Titanium
3	Hinge pin	Stainless Steel (302)
4	Pin retainer	Stainless Steel (302)
5	O-ring	Viton
6	Eye bolt w/ hex nut	Carbon Steel (ASTM A 105)

Above "Standard" Product Number for Short Pattern– **SP6R-TI-TI4**
Above "Standard" Product Number for Long Pattern– **LP6R-TI-TI4**
Other Options - Reference C2 for available materials.
Specify application and conditions so proper material grade can be supplied.

SIZE		DIMENSIONS								WEIGHTS			
		A		B		C							
		Short & Long		Short & Long		Short		Long		Short		Long	
in	mm	in	mm	in	mm	in	mm	in	mm	lbs	kgs	lbs	kgs
2	50	5-5/8	143	1	25	3/4	19	2-3/4	70	4	2	14	6
2-1/2	65	6-1/2	165	1-3/8	35	3/4	19	3-1/4	83	6	3	16	7
3	80	6-5/8	168	1-3/4	44	3/4	19	3-1/4	83	7	3	22	10
4	100	8-1/8	206	2-5/8	67	7/8	22	4	102	12	5	30	14
6	150	11-3/8	289	4	102	1-3/8	35	6-1/4	159	24	11	82	37
8	200	14-1/8	359	5	127	1-3/4	44	8-1/8	206	57	26	188	85
10	250	17-1/8	435	6-7/8	175	2-1/4	57	9-1/2	241	131	59	225	102
12	300	19-5/8	498	8-1/2	216	2-3/8	60	11-1/2	292	234	106	295	134
14	350	20-1/2	521	9-1/2	241	2-3/4	70	14	356	TBA	TBA	TBA	TBA
16	400	22-5/8	575	11	279	3-1/4	83	15-1/8	384	TBA	TBA	TBA	TBA
18	450	25-1/8	638	12-1/2	318	3-3/4	95	17-3/4	451	TBA	TBA	TBA	TBA
20	500	27-1/2	699	14-1/4	362	4-1/4	108	17-3/4	451	TBA	TBA	TBA	TBA
24	600	33	838	17-3/8	441	5-1/4	133	-	-	TBA	TBA	TBA	TBA
26	650	34-3/4	883	19	483	5-3/4	146	19-1/2	495	TBA	TBA	TBA	TBA
30	750	39-3/4	1010	22	559	6-3/4	171	-	-	TBA	TBA	TBA	TBA
36	900	47-1/4	1200	26-1/2	673	8	203	-	-	TBA	TBA	TBA	TBA

Certified dimensional drawings are available upon request.
†This table reflects only the nearest metric equivalents.

Seat Material	Operating Temperature**	
	°F	°C
Buna-N	-20 to 250	-29 to 121
Viton	-20 to 400	-29 to 204
EPDM	-40 to 300	-40 to 149

**Subject to limitations of body material.

KECKLEY

TECHNICAL DATA
DIMENSIONS AND WEIGHTS

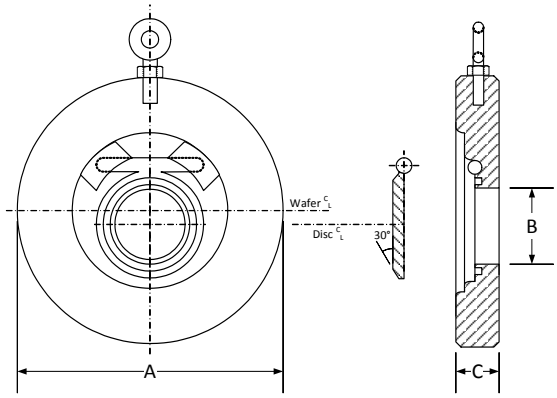

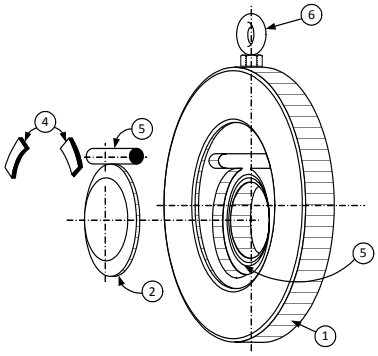

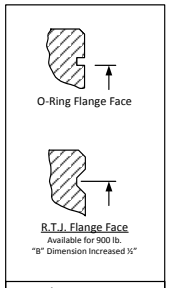

Flange Face Alternatives

Style SP & Style LP

Short Pattern & Long Pattern
Wafer Check Valve, 1500 lb.
Titanium

PARTS LIST		
ITEM	DESCRIPTION	MATERIAL
1	Body	Titanium
2	Disc	Titanium
3	Hinge pin	Stainless Steel (302)
4	Pin retainer	Stainless Steel (302)
5	O-ring	Viton
6	Eye bolt w/ hex nut	Carbon Steel (ASTM A 105)

Above "Standard" Product Number for Short Pattern– **SP7R-TI-TI4**
Above "Standard" Product Number for Long Pattern– **LP7R-TI-TI4**
Other Options - Reference C2 for available materials.
Specify application and conditions so proper material grade can be supplied.

SIZE		DIMENSIONS								WEIGHTS			
		A		B		C							
		Short & Long		Short & Long		Short		Long		Short		Long	
in	mm	in	mm	in	mm	in	mm	in	mm	lbs	kgs	lbs	kgs
1-1/2	40	3-7/8	98	7/8	22	3/4	19	2-3/4	70	4	2	14	6
2	50	5-5/8	143	1	25	3/4	19	2-3/4	70	4	2	14	6
3	80	6-7/8	175	1-3/4	44	7/8	22	3-1/4	83	9	4	24	11
4	100	8-1/4	210	2-1/4	57	1-1/4	32	4	102	19	9	35	16
6	150	11-1/8	283	3-3/4	95	1-3/4	44	6-1/4	159	49	22	92	42
8	200	13-7/8	352	4-3/4	121	2-1/4	57	8-1/8	206	74	34	195	88
10	250	17-1/8	435	6-3/4	171	2-7/8	73	9-3/4	248	158	72	245	111
12	300	20-1/2	521	8-1/2	216	3-3/8	86	12	305	255	116	330	150

Certified dimensional drawings are available upon request.
†This table reflects only the nearest metric equivalents.

Seat Material	Operating Temperature**	
	°F	°C
Buna-N	-20 to 250	-29 to 121
Viton	-20 to 400	-29 to 204
EPDM	-40 to 300	-40 to 149

**Subject to limitations of body material.

KECKLEY

PRESSURE DROP CHART

Wafer Double Disc Check Valve (Style DD, DL, and DF)

This pressure drop chart is based on the flow of clean water through the Keckley Double Disc Check Valve. The Keckley Style DD has a cracking pressure equal to or less than 0.3 psi when mounted horizontally. Check valves should be placed at a distance equal to 5 to 10 pipe diameters from any turbulence producing device such as elbows, pumps, etc.

TO USE CHARTS:

Find your desired rate of flow (GPM) on the left hand side of the chart. Follow its corresponding horizontal line to the point where it intersects the diagonal line indicating the check valve pipe size. From this point of intersection, follow the vertical line down to the bottom of the chart to determine the approximate pressure drop.

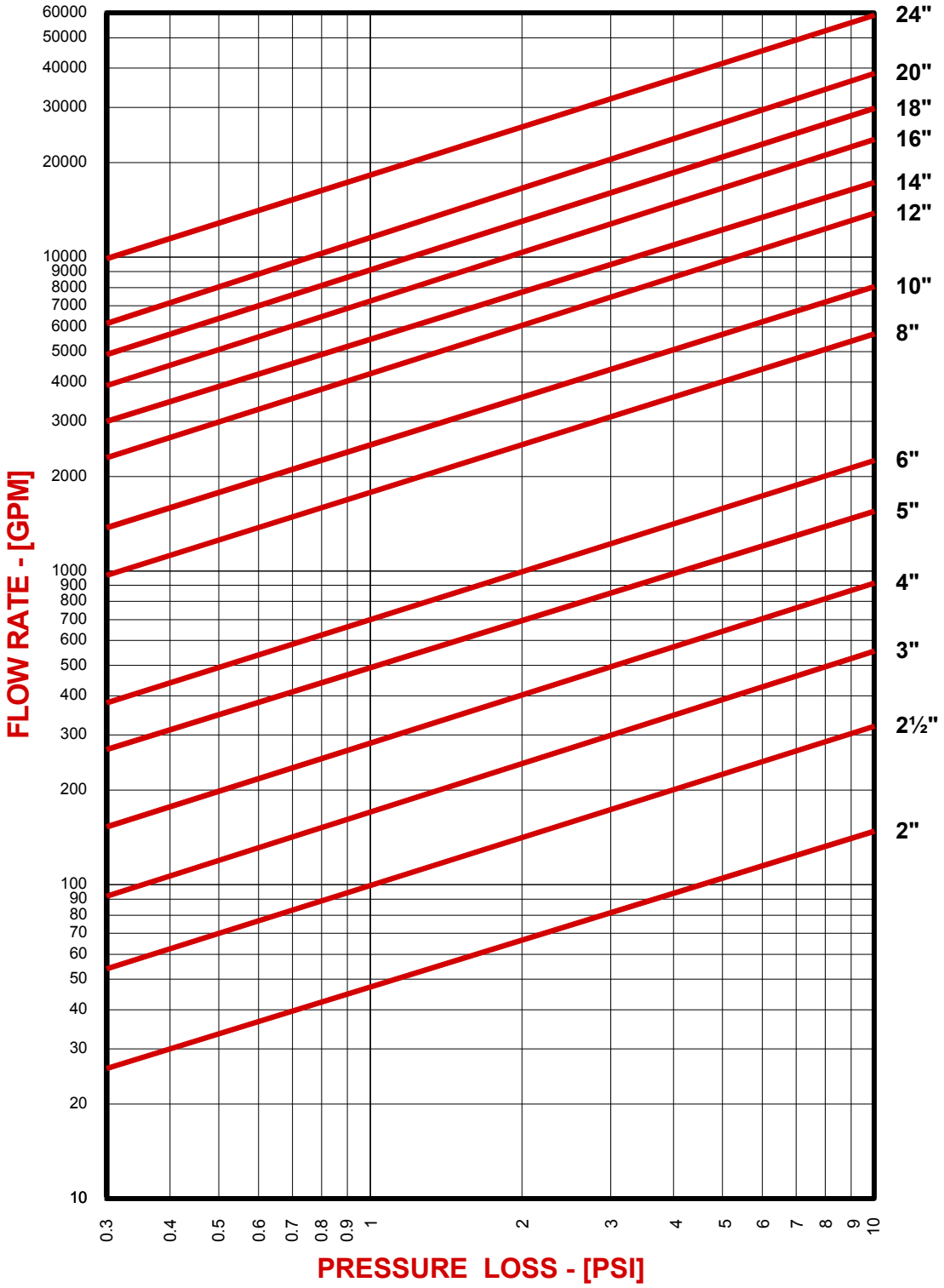

KECKLEY COMPANY • 3400 Cleveland Street • Skokie, Illinois 60076 1-800-KECKLEY

Uni-Directional (Metal Seated)

Manual Handwheel

Style KGV 2

Carbon Steel Technical Data 150 PSI 2” – 24” 3

304 Stainless Steel Technical Data 150 PSI 2” – 24” 3

316 Stainless Steel Technical Data 150 PSI 2” – 24” 3

Bi-Directional (Resilient Seated)

Manual Handwheel

Style KGV 2

Carbon Steel Technical Data 150 PSI 2” – 24” 4

304 Stainless Steel Technical Data 150 PSI 2” – 24” 4

316 Stainless Steel Technical Data 150 PSI 2” – 24” 4

Fabricated

Bevel Gear Operator

Bi-Directional Metal Seat 150 PSI 30” – 60” 5

Bi-Directional Resilient Seat 150 PSI 30” – 60” 6

Features

Knife Gate Valve

Exploded View 7

Packing Options 7

KECKLEY

Style KGV

Knife Gate Valve

Carbon Steel (ASTM A 216, Grade WCB)
150 PSI

Stainless Steel (ASTM A 351, Grade CF8)
150 PSI

Stainless Steel (ASTM A 351, Grade CF8M)
150 PSI

Cylinder Actuation
2” - 24”

Bevel Gear Actuation
2” - 24”

APPLICATIONS

Pulp and paper, chemical, petrochemical, power, mining, waste water, food processing, and beverage where shut-off of liquids is required.

CONSTRUCTION

The Keckley Style KGV Knife Gate Valves are constructed from rugged castings that are machined to exacting specifications.

FEATURES

- Meets TAPPI TIS 405-8 and MSS SP-81 Standards on wafer-type knife gate valves for face to face dimensions.
- Flanges match ASME B16.5 Class 150. Holes tapped.
- 150 PSIG (10.3 Bar) max. working pressure. 150°F (65°C) max. working temperature. Applications outside of their conditions require special design considerations.
- Gate edge is beveled for easier packing seal and longer packing life.
- Meets MSS SP-81 shut-off requirements of 40cc per inch per minute at 40 PSI (water test).
- Non-clogging large port.
- Port diameter exceeds requirements of MSS SP-81.
- Replaceable resilient seats extend the service life of the valve. Resilient seats can be easily replaced after removing the valve from the line.

AVAILABLE OPTIONS

Actuation

- Manual Handwheel
- Double Acting Hydraulic Cylinder Operator
- Chainwheel Operators
- Double Acting Spring-Return Pneumatic Cylinder Operator
- Bevel Gear Operators
- Electric Motor Operators

Automation

- Mechanical Limit Switches for Position Indication
- Proximity Limit Switches for Position Indication
- Solenoid Control Valves for Pneumatic Cylinders
- Pneumatic Positioners for Valve Positioning
- Electro-Pneumatic Positioners
- Air-Filter Regulators

Other Options

- V-Ports
- Deflection Cones
- True-Non-Rising Stem Design
- Torque Tubes
- Pipe Extensions
- Wall Mounts
- Wall Brackets
- Rising Stem Floor Stands
- Non-Rising Stem Floor Stands
- Floor Boxes
- 2” Drive Nuts
- Lockout Device

ORDERING

Reference product number table for proper ordering code.

KECKLEY

TECHNICAL DATA
DIMENSIONS AND WEIGHTS

Style KGV

Knife Gate Valve, 150 PSI, Large Port, Metal Seat Uni-Directional with Manual Hand Wheel

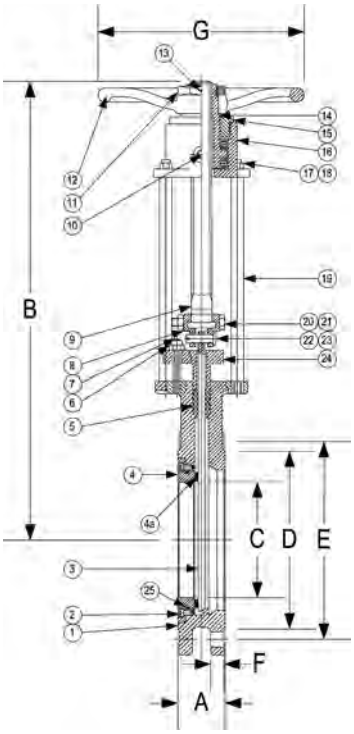

PARTS LIST				
ITEM	DESCRIPTION	MATERIAL		
1	Body	WCB (CS)	CF8 (304ss)	CF8M (316ss)
2	Inner Hex Head Screws (2)	A 193, B7	A 193, B8	A 193, B8
3	Gate	A 276, 304	A 276, 304	A 276, 316
4	Valve Seat	A 216, WCB	A 351, CF8	A 351, CF8M
4a	Valve Seat Surface*	A216, WCB	A 351, CF8	A 351, CF8M
5	Packing	PTFE	PTFE	PTFE
6,18,21	Nut	A 194, 2H	A 194, 8	A 194, 8
7	Stud	A 193, B7	A 193, B8	A 193, B8
8	Clamp Plate	A 216, WCB	A 351, CF8	A 351, CF8
9	Stem	A276, 410	A 276, 304	A 276, 304
10	Grease Fitting	A 276, 304	A 276, 304	A 276, 304
11	Handwheel Nut	AISI 1025	AISI 1025	AISI 1025
12	Handwheel	A 536	A 536	A 536
13	Screw	A 193, B7	A 193, B8	A 193, B8
14	Stem Nut	B 148	B 148	B 148
15	Gland	A 216, WCB	A 351, CF8	A 351, CF8
16	Top of Yoke	A 216, WCB	A 351, CF8	A 351, CF8
17	Spring Washer	AISI 1065	A 276, 304	A 276, 304
19	Post (Chrome Plated)	AISI 1035	AISI 1035	AISI 1035
20	Bolt	A 193, B7	A 193, B8	A 193, B8
22	Straight Pin	AISI 1035	A 276, 304	A 276, 304
23	Cotter Pin	A 276, 304	A 276, 304	A 276, 304
24	Packing Gland	A 216, WCB	A 351, CF8	A 351, CF8
25	O-Ring**	(See Below)		

*Consult factory for Valve Seat Surface Options: Buna-N, Viton, EPDM, and PTFE.
**O-Ring Options: Buna-N, Viton, EPDM, and PTFE.
Consult factory for actuation options: Bevel Gear, Air Cylinder, Hydraulic Cylinder, or Motor Operated.

Product Numbers								
Size	Class	Valve Type	-	Body Material	-	Valve Seat Surface	Directional Flow	Actuation
	2	KGV	-	CS	-	M	U	M

CS	Carbon Steel
34	304 Stainless Steel
36	316 Stainless Steel

M	Metal (Same as Valve Seat)

SIZE		DIMENSIONS														WEIGHTS	
		A		B		C		D		E		F		G			
in	mm	in	mm	in	mm	in	mm	in	mm	in	mm	in	mm	in	mm	lbs	kgs
2	50	1.88	48	10.83	275	1.81	46	3.62	92	4.75	120.7	0.50	12.7	8.00	203	20	9
2-1/2	65	2.00	51	11.81	300	2.36	60	4.13	105	5.50	139.5	0.50	12.7	8.00	203	23	10.5
3	80	2.00	51	12.52	318	2.76	70	5.00	127	6.00	152.5	0.50	12.7	8.00	203	27	12
4	100	2.00	51	14.80	376	3.78	96	6.20	157.5	7.50	190.5	0.50	12.7	8.00	203	35	16
6	150	2.25	57	19.29	490	5.71	145	8.50	216	9.50	241.5	0.63	16	10.00	255	57	26
8	200	2.75	70	22.83	580	7.64	194	10.63	270	11.75	298.5	0.63	16	12.00	305	86	39
10	250	2.75	70	28.15	715	9.65	245	12.76	324	14.25	362	0.75	19.1	14.00	356	141	64
12	300	3.00	76	33.27	845	11.81	300	15.00	381	17.00	432	0.75	19.1	14.00	356	187	85
14	350	3.00	76	37.36	949	12.99	330	16.26	413	18.75	476	0.81	20.6	16.00	406	265	120
16*	400	3.50	89	56.20	1427.5	14.96	380	18.50	470	21.25	540	0.88	22.4	12.00	310	381	173
18*	450	3.50	89	62.40	1585	16.54	420	21.00	533.5	22.75	578	0.94	23.9	12.00	310	474	215
20*	500	4.50	114	68.28	1734	18.50	470	23.00	584.5	25.00	635	1.00	25.4	18.00	460	637	289
24*	600	4.50	114	79.92	2030	22.44	570	27.26	692.5	29.50	749.5	1.00	25.4	18.00	460	884	401

*16" - 24" standard with Bevel Gear. (Not Shown)
Larger sizes available upon request. Consult factory.
†This table reflects only the nearest metric equivalents.

Reference Standards
MSS SP-81
TIS 405-8

Size	Standard Cv*	V-Port Cv*	Leakage† (cc/min)		Size	Standard Cv*	V-Port Cv*	Leakage† (cc/min)	
			TAPPI Allow.	Keckley Actual				TAPPI Allow.	Keckley Actual
2	340	85	80	0-20	12	15,300	2,850	480	0-100
3	850	195	120	0-20	14	19,000	3,750	560	0-100
4	1,500	340	160	0-40	16	25,500	4,900	640	0-100
6	3,500	800	240	0-60	18	36,000	6,500	720	0-100
8	6,600	1,400	320	0-80	20	45,000	8,000	800	0-100
10	9,800	1,900	400	0-100	24	60,000	12,000	960	0-100

*Tested in accordance with ASME/ISA-575-02.
†Test pressure 40 psi water (TAPPI and MSS SP-81).

KECKLEY

TECHNICAL DATA
DIMENSIONS AND WEIGHTS

Style KGV

Knife Gate Valve, 150 PSI, Large Port, Resilient Seat Bi-Directional with Manual Hand Wheel

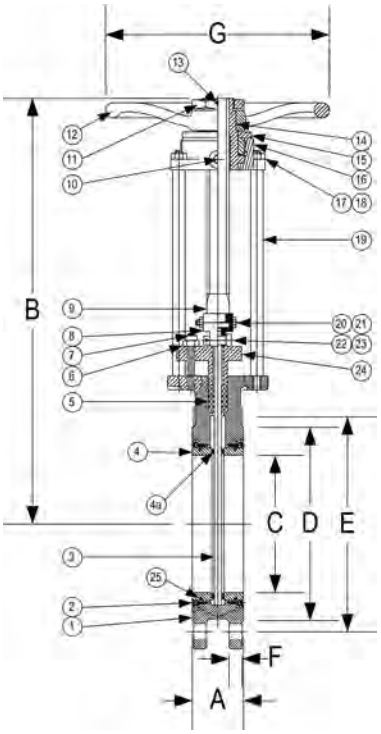

Product Numbers								
Size	Class	Valve Type	-	Body Material	-	Valve Seat Surface	Directional Flow	Actuation
	2	KGV	-	36	-	B	B	M

CS	Carbon Steel
34	304 Stainless Steel
36	316 Stainless Steel

B	Buna-N
V	Viton
E	EPDM
P	PTFE

PARTS LIST				
ITEM	DESCRIPTION	MATERIAL		
1	Body	WCB (CS)	CF8 (304ss)	CF8M (316ss)
2	Inner Hex Head Screws (4)	A 193, B7	A 193, B8	A 193, B8
3	Gate	A 276, 304	A 276, 304	A 276, 316
4	Valve Seats (2)	A 216, WCB	A 351, CF8	A 351, CF8M
4a	Valve Seat Surface* (2)	(See Below)		
5	Packing	PTFE	PTFE	PTFE
6,18,21	Nut	A 194, 2H	A 194, 8	A 194, 8
7	Stud	A 193, B7	A 193, B8	A 193, B8
8	Clamp Plate	A 216, WCB	A 351, CF8	A 351, CF8
9	Stem	A276, 410	A 276, 304	A 276, 304
10	Grease Fitting	A 276, 304	A 276, 304	A 276, 304
11	Handwheel Nut	AISI 1025	AISI 1025	AISI 1025
12	Handwheel	A 536	A 536	A 536
13	Screw	A 193, B7	A 193, B8	A 193, B8
14	Stem Nut	B 148	B 148	B 148
15	Gland	A 216, WCB	A 351, CF8	A 351, CF8
16	Top of Yoke	A 216, WCB	A 351, CF8	A 351, CF8
17	Spring Washer	AISI 1065	A 276, 304	A 276, 304
19	Post (Chrome Plated)	AISI 1035	AISI 1035	AISI 1035
20	Bolt	A 193, B7	A 193, B8	A 193, B8
22	Straight Pin	AISI 1035	A 276, 304	A 276, 304
23	Cotter Pin	A 276, 304	A 276, 304	A 276, 304
24	Packing Gland	A 216, WCB	A 351, CF8	A 351, CF8
25	O-Rings (2)	(Same as 4a)		

*Valve Seat Surface Options: Buna-N, Viton, EPDM, and PTFE.
Consult factory for actuation options: Bevel Gear, Air Cylinder, Hydraulic Cylinder, or Motor Operated.

SIZE		DIMENSIONS														WEIGHTS	
		A		B		C		D		E		F		G			
in	mm	in	mm	in	mm	in	mm	in	mm	in	mm	in	mm	in	mm	lbs	kgs
2	50	1.88	48	10.83	275	1.81	46	3.62	92	4.75	120.7	0.50	12.7	8.00	203	20	9
2-1/2	65	2.00	51	11.81	300	2.36	60	4.13	105	5.50	139.5	0.50	12.7	8.00	203	23	10.5
3	80	2.00	51	12.52	318	2.76	70	5.00	127	6.00	152.5	0.50	12.7	8.00	203	27	12
4	100	2.00	51	14.80	376	3.78	96	6.20	157.5	7.50	190.5	0.50	12.7	8.00	203	35	16
6	150	2.25	57	19.29	490	5.71	145	8.50	216	9.50	241.5	0.63	16	10.00	255	57	26
8	200	2.75	70	22.83	580	7.64	194	10.63	270	11.75	298.5	0.63	16	12.00	305	86	39
10	250	2.75	70	28.15	715	9.65	245	12.76	324	14.25	362	0.75	19.1	14.00	356	141	64
12	300	3.00	76	33.27	845	11.81	300	15.00	381	17.00	432	0.75	19.1	14.00	356	187	85
14	350	3.00	76	37.36	949	12.99	330	16.26	413	18.75	476	0.81	20.6	16.00	406	265	120
16*	400	3.50	89	56.20	1427.5	14.96	380	18.50	470	21.25	540	0.88	22.4	12.00	310	381	173
18*	450	3.50	89	62.40	1585	16.54	420	21.00	533.5	22.75	578	0.94	23.9	12.00	310	474	215
20*	500	4.50	114	68.28	1734	18.50	470	23.00	584.5	25.00	635	1.00	25.4	18.00	460	637	289
24*	600	4.50	114	79.92	2030	22.44	570	27.26	692.5	29.50	749.5	1.00	25.4	18.00	460	884	401

*16" - 24" standard with Bevel Gear. (Not Shown)
Larger sizes available upon request. Consult factory.
†This table reflects only the nearest metric equivalents.

Valve Seat Surface Options	Operating Temperature** °F	°C
Buna-N	-20 to 250	-29 to 121
Viton	-20 to 400	-29 to 204
EPDM	-40 to 300	-40 to 149
PTFE	-40 to 300	-40 to 149

**Subject to limitations of body material.

Reference Standards
MSS SP-81
TIS 405-8

Size	Standard Cv*	Leakage† (cc/min) Main Seat 1 - 150 PSI	Size	Standard Cv*	Leakage† (cc/min) Keckley Actual
2	340	0	12	15,300	0-20
3	850	0	14	19,000	0-20
4	1,500	0	16	25,500	0-40
6	3,500	0	18	36,000	0-60
8	6,600	0	20	45,000	0-80
10	9,800	0	24	60,000	0-100

*Tested in accordance with ASME/ISA-575-02.
†Test pressure 40 psi water (TAPPI and MSS SP-81).

KECKLEY

TECHNICAL DATA
DIMENSIONS AND WEIGHTS

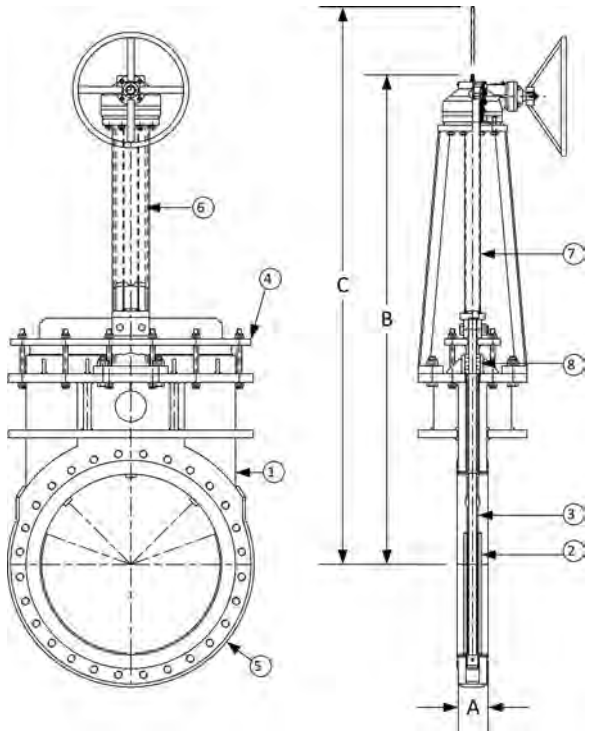

Style FKGV

Knife Gate Valve, Large Port, Metal Seat
Bi-Directional with Bevel Gear Operator
Fabricated Stainless Steel (304)

PARTS LIST		
ITEM	DESCRIPTION	MATERIAL
1	Body	Stainless Steel (304)
2	Seat	Stainless Steel (304)
3	Gate	Stainless Steel (304)
4	Packing Gland	Stainless Steel (304)
5	Flanges, Ext Trim	Stainless Steel (304)
6	Yoke Assembly	Stainless Steel (304)
7	Stem Assembly	Stainless Steel (304)
8	Packing	TFE/SYN

SIZE		DIMENSIONS						MAX PRESSURE		WEIGHTS	
		A		B		C					
in	mm	in	mm	in	mm	in	mm	PSI	KPa	lbs	kgs
30	750	4-5/8	117	74-3/4	1899	104	2642	125	862	TBD	TBD
36	900	5-3/4	146	89-1/8	2264	121	3073	125	862	TBD	TBD
42	1050	6-1/4	159	97-1/4	2470	136	3454	125	862	TBD	TBD
48	1200	7	178	110	2794	155	3937	125	862	TBD	TBD
54	1350	6-5/8	168	123	3124	173	4394	50	345	TBD	TBD
60	1500	7	178	135	3429	189	4801	50	345	TBD	TBD

†This table reflects only the nearest metric equivalents.

Product Numbers							
Size	Valve Type	-	Body Material	-	Seat Material	Directional Flow	Actuation
	FKGV	-	34	-	M	B	B

M	Metal (Same as Valve Seat)

KECKLEY

TECHNICAL DATA
DIMENSIONS AND WEIGHTS

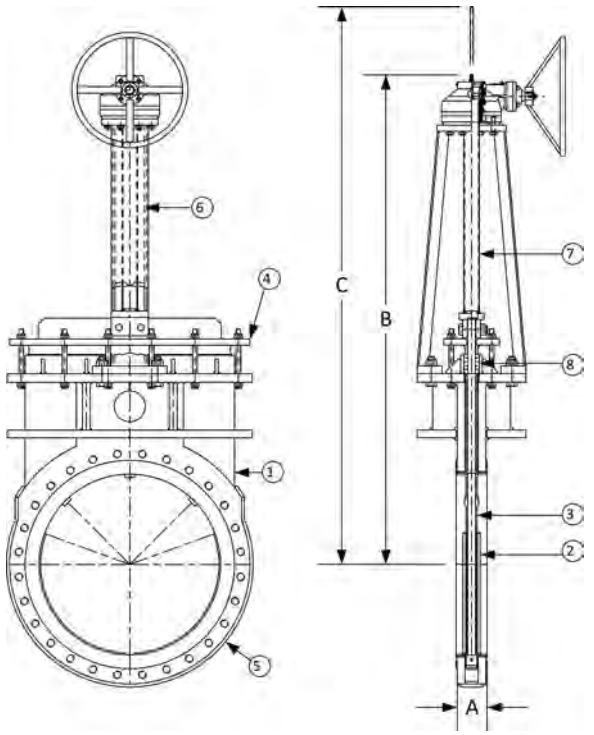

Style FKGV

Knife Gate Valve, Large Port, Resilient Seat
Bi-Directional with Bevel Gear Operator
Fabricated Stainless Steel (304)

PARTS LIST		
ITEM	DESCRIPTION	MATERIAL
1	Body	Stainless Steel (304)
2	Seat*	Viton
3	Gate	Stainless Steel (304)
4	Packing Gland	Stainless Steel (304)
5	Flanges, Ext Trim	Stainless Steel (304)
6	Yoke Assembly	Stainless Steel (304)
7	Stem Assembly	Stainless Steel (304)
8	Packing	TFE/SYN

*Other Seat Options available in Buna-N, EPDM, and PTFE.

SIZE		DIMENSIONS						MAX PRESSURE		WEIGHTS	
		A		B		C					
in	mm	in	mm	in	mm	in	mm	PSI	KPa	lbs	kgs
30	750	4-5/8	117	74-3/4	1899	104	2642	125	862	TBD	TBD
36	900	5-3/4	146	89-1/8	2264	121	3073	125	862	TBD	TBD
42	1050	6-1/4	159	97-1/4	2470	136	3454	125	862	TBD	TBD
48	1200	7	178	110	2794	155	3937	125	862	TBD	TBD
54	1350	6-5/8	168	123	3124	173	4394	50	345	TBD	TBD
60	1500	7	178	135	3429	189	4801	50	345	TBD	TBD

†This table reflects only the nearest metric equivalents.

Seat Material	Operating Temperature**	
	°F	°C
Buna-N	-20 to 250	-29 to 121
Viton	-20 to 400	-29 to 204
EPDM	-40 to 300	-40 to 149
PTFE	-40 to 300	-40 to 149

**Subject to limitations of body material.

Product Numbers							
Size	Valve Type	-	Body Material	-	Seat Material	Directional Flow	Actuation
	FKGV	-	34	-	V	B	B

V	Viton
B	Buna-N
E	EPDM
P	PTFE

KECKLEY

FEATURES

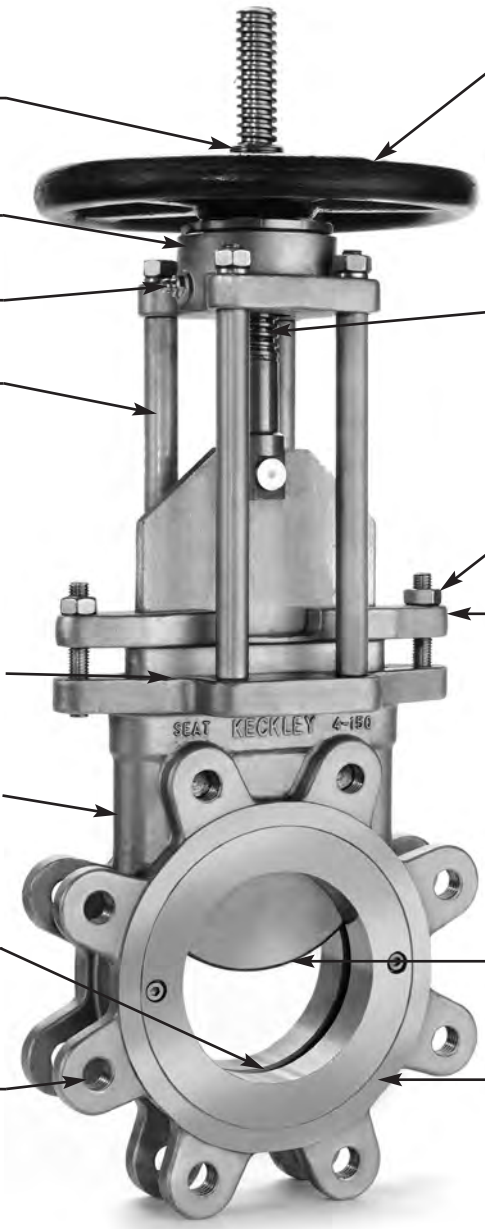

Locking handwheel retaining nut.

Bronze stem nut.

Grease fitting

New 4-Post Yoke, available in stainless or carbon steel, can be field modified to bevel gear or air cylinder without welding.

Packing, multiple rows of Teflon or other packing.

304, 316, 317 or WCB body designed to meet the requirements of MSS SP-81.

Valve Seat.

Flanges drilled and tapped to ANSI B16.5/150.

Handwheel, cast ductile iron.

Optional Non-Rising Stem Assembly. (Not Shown).

Stem, heavy cross-section 304 stainless steel stem, single-lead Acme threads for ease of operation.

Hex nuts.

Packing Gland, cast 304, 316, 317, or WCB.

Gate, beveled to cut through solids and provide tight shutoff.

Machined raised gasket faces.

The Keckley Style KGV knife gate valves are available with numerous optional packing types and special packing arrangements to help ensure superior performance.

Standard Packing
Is an asbestos free Teflon impregnated synthetic suitable for services up to 500°F and a pH of 3-11, other packings include pure Teflon (0-13 pH) and food-grade Teflon and hi-temperature variations.

Gate Wiper
In viscous and scaling applications, a gate wiper can be added. Made from various materials, the wiper is fit to scrape the gate and deter solids from entering the packing area.

Enhanced Packing
Features Self-Mold SM636, a pliable packing material that forms itself to the interior of the packing box, filling any voids.

Cored Power Packing
Provides superior packing life with fewer adjustments, available in many different configurations.

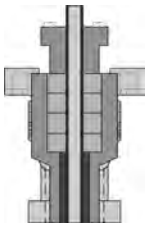

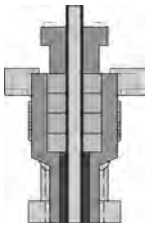

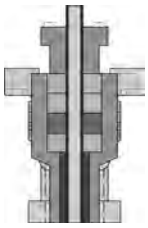

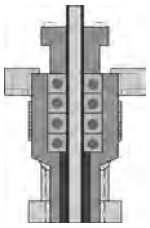

Suction Diffuser - Iron Body
Style PSD 125# Flanged 2” x 1-1/2” thru 20” x 20” 2
Technical Data 3

Triple Duty Valve - Iron Body
Style TDV 125# Flanged 2” - 20” 4
Technical Data 5

Pressure Drop Charts
Suction Diffuser 6
Triple Duty Valve 7

KECKLEY

Style PSD

Suction Diffuser
Cast Iron (ASTM A 126, Class B)
125 lb. Flanged

Suction Diffuser

APPLICATIONS

The Keckley Style PSD mounts to the suciton side of a pump in either a horizontal or vertical position.It is designed to remove any foreign matter that may be hazarous to the pump or other system componets, while providing the porper flow conditions to the pump. Where space is limited, the Keckley Style PSD can be used as an elbow (in some cases a reducing elbow) with a built in strainer for easy maintenance and system performance.

CONSTRUCTION

The Keckley Style PSD Suction Diffusers are constructed from rugged cast iron castings that are machined to exacting specifications. These bodies have drilled flanges that are in accordance with ASME B16.1.

FEATURES

- Reduces installation costs by replacing the strainer, elbow, and entry pipe on the suction side of the pump.
- Integral straightening vanes ensure uniform flow to the suction inlet of the pump.
- Minimal pressure drop (Oversized body & screen).
- Perforated stainless steel screen with a 20 mesh stainless steel removable start-up sleeve to help promote a cleaner more trouble free system.
- Bolted cover plate with O-ring seal - standard. (Knobs available upon request).
- Cast supporting pads on the diffuser body offer easy mounting of standard I.D. support foot.
- Tappin for inlet and outlet differential connections - Optional.
- Drain connection with plug - standard.

WORKING PRESSURES - NON SHOCK

NOM. RATING	MEDIA	2" to 12"	14" and Larger
125# (Flanged)	W.O.G.	200 PSI @ 150ºF	150 PSI @ 150ºF

Typical Installation

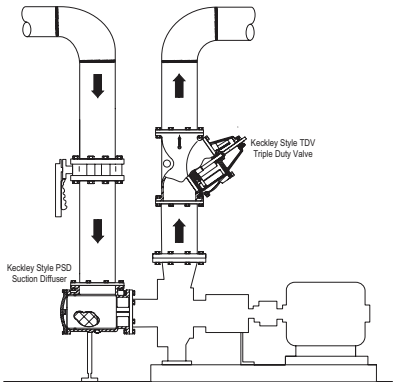

KECKLEY

TECHNICAL DATA
DIMENSIONS AND WEIGHTS

Style PSD

Suction Diffuser, 125 lb. Flanged
Cast Iron (ASTM A 126, Class B)

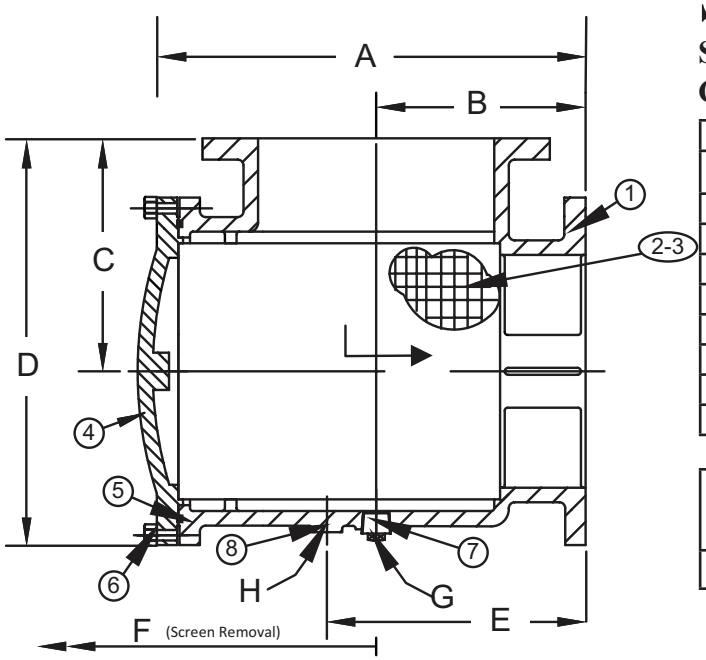

PARTS LIST		
ITEM	DESCRIPTION	MATERIAL
1	Body	Cast Iron (ASTM A 126, Class B)
2	Screen	Stainless Steel (304)
3	Mesh Sleeve*	Stainless Steel (304)
4	Cover	Cast Iron (ASTM A 126, Class B)
5	O-Ring	Buna-N
6	Hex Head Bolt†	Steel
7	Plug	Cast Carbon Steel
8	Stub	Cast Iron (ASTM A 126, Class B)

†Ductile Iron Knobs are available upon request.

SIZE	SCREEN PERFORATION	OPEN AREA
2" to 20"	1/8"	43%

*20 mesh stainless steel sleeves are provided with all Suction Diffusers for start-up applications.
Other meshes or screen perforations available upon request, consult factory.

SIZE Inlet x Outlet	A	B	C	D	E	F Screen Removal	G Blow Down Connection	H Pipe Support I.D.	WEIGHTS LBS.
2 x 1-1/2	10	4-1/2	4-1/2	7	6	8-13/16	3/4	1.02	24
2 x 2	10	4-1/2	4-1/2	7	6	8-13/16	3/4	1.02	24
2-1/2 x 2	10-5/8	5	5	7-13/16	6-9/16	9-1/8	3/4	1.02	27
2-1/2 x 2-1/2	10-5/8	5	5	7-13/16	6-9/16	9-1/8	3/4	1.02	37
3 x 2	10	4-1/2	5-1/2	8-1/8	6	9-5/8	3/4	1.30	42
3 x 2-1/2	11-3/16	5-1/2	5-1/2	9	7	9-5/8	3/4	1.30	46
3 x 3	11-3/16	5-1/2	5-1/2	9	7	9-5/8	3/4	1.30	51
4 x 3	13-1/8	6-1/2	6-1/2	11	8-3/4	11-1/2	1	1.30	74
4 x 4	13	6-1/2	6-1/2	11	8-1/4	11-1/2	1	1.30	76
5 x 4	15-1/2	7-1/2	7-1/2	13	10	14-7/8	1	1.30	106
5 x 5	15-1/2	7-1/2	7-1/2	13-3/4	10	14-7/8	1	1.30	111
6 x 4	13-1/8	6-1/2	8	12-3/16	8-3/4	16-9/16	1	1.30	93
6 x 5	16-5/8	8	8	14-7/16	10-11/16	16-9/16	1	1.30	128
6 x 6	16-5/8	8	8	14-1/2	10-11/16	19-9/16	1	1.30	149
8 x 5	19-3/16	9	7-9/16	13-1/8	13	16-7/8	1	1.30	178
8 x 6	16-7/8	8	9	15-1/2	10-11/16	16-7/8	1	1.30	178
8 x 8	21-3/8	9	9	17-1/4	11-5/8	22-7/8	1-1/4	2.05	267
10 x 8	21-3/16	9	11	19-1/4	11-5/8	22-7/8	1-1/4	2.05	353
10 x 10	26-11/16	11	11	20-3/4	14-3/16	30-1/4	1-1/4	2.05	388
12 x 8	21-11/16	11	11	19-1/4	13-5/8	22-7/8	1-1/4	2.05	492
12 x 10	26-11/16	11	12	21-3/4	14-3/16	33	1-1/4	2.05	492
12 x 12	26-11/16	12	12	21-3/4	15-3/8	28-3/4	1-1/4	2.05	529
14 x 10	26-11/16	12-15/16	12-9/16	22-3/16	17-3/16	33	1-1/4	2.05	507
14 x 12	26-11/16	12-15/16	12-9/16	22-3/16	17-3/16	31	1-1/4	2.05	601
14 x 14	26-11/16	12-15/16	12-9/16	22-3/16	17-3/16	33-1/8	1-1/4	2.05	620
16 x 12	29-5/16	14-5/16	13-3/16	23-3/4	18-5/8	28-3/4	1-1/4	2.05	725
16 x 14	29-5/16	14-5/16	13-3/16	23-3/4	18-5/8	31	1-1/2	2.05	750
16 x 16	29-5/16	14-5/16	13-3/16	23-3/4	18-5/8	33-1/8	1-1/2	2.05	820
18 x 18	30-15/16	15-5/16	14-9/16	26-5/16	18-13/16	-	2	2.05	-
20 x 20	33-7/16	16-7/8	16	28-3/4	20-5/16	-	2	2.05	-

Larger sizes available upon request.
Certificed dimensional drawings and metric drawings available upon

KECKLEY

Style TDV

Triple Duty Valve
Cast Iron (ASTM A 126, Class B)
125 lb. Flanged

Triple Duty Valve

APPLICATIONS

The Keckley Style TDV is a Triple Duty Valve primarily required on the discharge side of a centrifugal pump in a hydronic heating or cooling system. This valve functions as a shut-off valve, spring loaded silent check valve, and balancing valve.

CONSTRUCTION

The Keckley Style TDV Triple Duty Valves are constructed from rugged cast iron castings that are machined to exacting specifications. These bodies have drilled flanges that are in accordance with ASME B16.1.

FEATURES

The center guided soft seal disc ensures that there is no leakage. The rising stem design includes an adjustable position indicator for accurate disc positioning for throttling service. This unit comes with standard gauge taps at both the inlet and outlet sides and a NPT drain plug.

WORKING PRESSURES - NON SHOCK

KECKLEY

TECHNICAL DATA
DIMENSIONS AND WEIGHTS

Style TDV

Triple Duty Valve, 125 lb. Flanged
Cast Iron (ASTM A 126, Class B)

Designed For Pump Protection

Features

- A Shut-off Valve
- A Spring Loaded Silent Check Valve
- A Balancing Valve

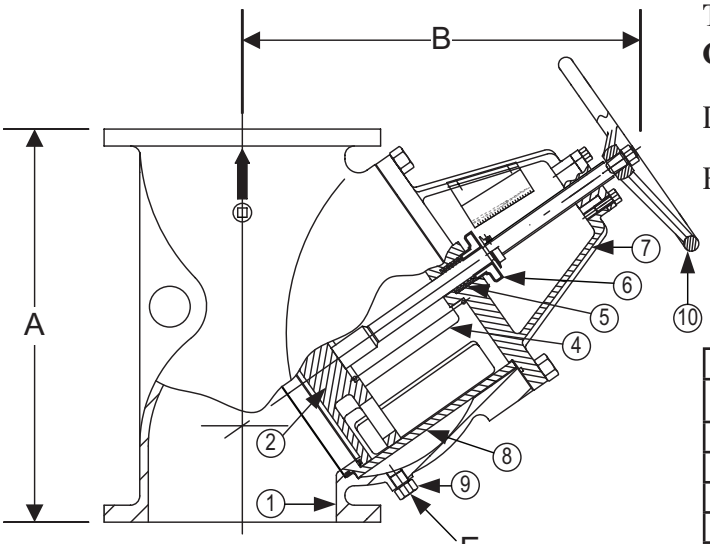

Furnished standard with
¼" gauge taps & Hand Wheel

PARTS LIST		
ITEM	DESCRIPTION	MATERIAL
1	Body	Cast Iron (ASTM A 126, Class B)
2	Disc	Ductile Iron w/ vulcanized rubber
3	Stem	410 Stainless Steel
4	Spring	304 Stainless Steel
5	Packing	Graphite
6	Gland	Ductile Iron
7	Cover	Cast Iron (ASTM A 126, Class B)
8	Guide	Ductile Iron Nickel Coated
9	Plug	Carbon Steel
10	Handwheel	Cast Iron (ASTM A 126, Class B)
	O-Rings	Buna-N

SIZE		DIMENSIONS						WEIGHTS	
		A		B		E			
in	mm	in	mm	in	mm	in	mm	lbs	kgs
2	50	8-3/8	213	9-5/8	244	1/2	15	28	13
2-1/2	65	9-7/8	251	10	254	1/2	15	33	15
3	80	10	254	10-1/8	257	1/2	15	57	26
4	100	14-1/2	368	12-5/8	321	1/2	15	98	44
5	125	16	406	16-3/8	416	1/2	15	157	71
6	150	18	457	17-1/2	445	3/4	20	196	89
8	200	21-1/2	546	18-1/2	470	3/4	20	348	158
10	250	25-1/2	648	21-3/4	552	1	25	475	215
12	300	30	762	24-1/2	622	1	25	656	298
14	350	30-3/8	772	24-1/2	622	3/4	20	787	357
16	400	33-13/16	858	34-11/16	880	2	50	--	--
18	450	36-15/16	938	40-15/16	1040	2	50	--	--
20	500	41-3/8	1050	Consult Factory					

†This table reflects only the nearest metric equivalents.

KECKLEY

PRESSURE DROP CHART

Suction Diffuser (Styles PSD)

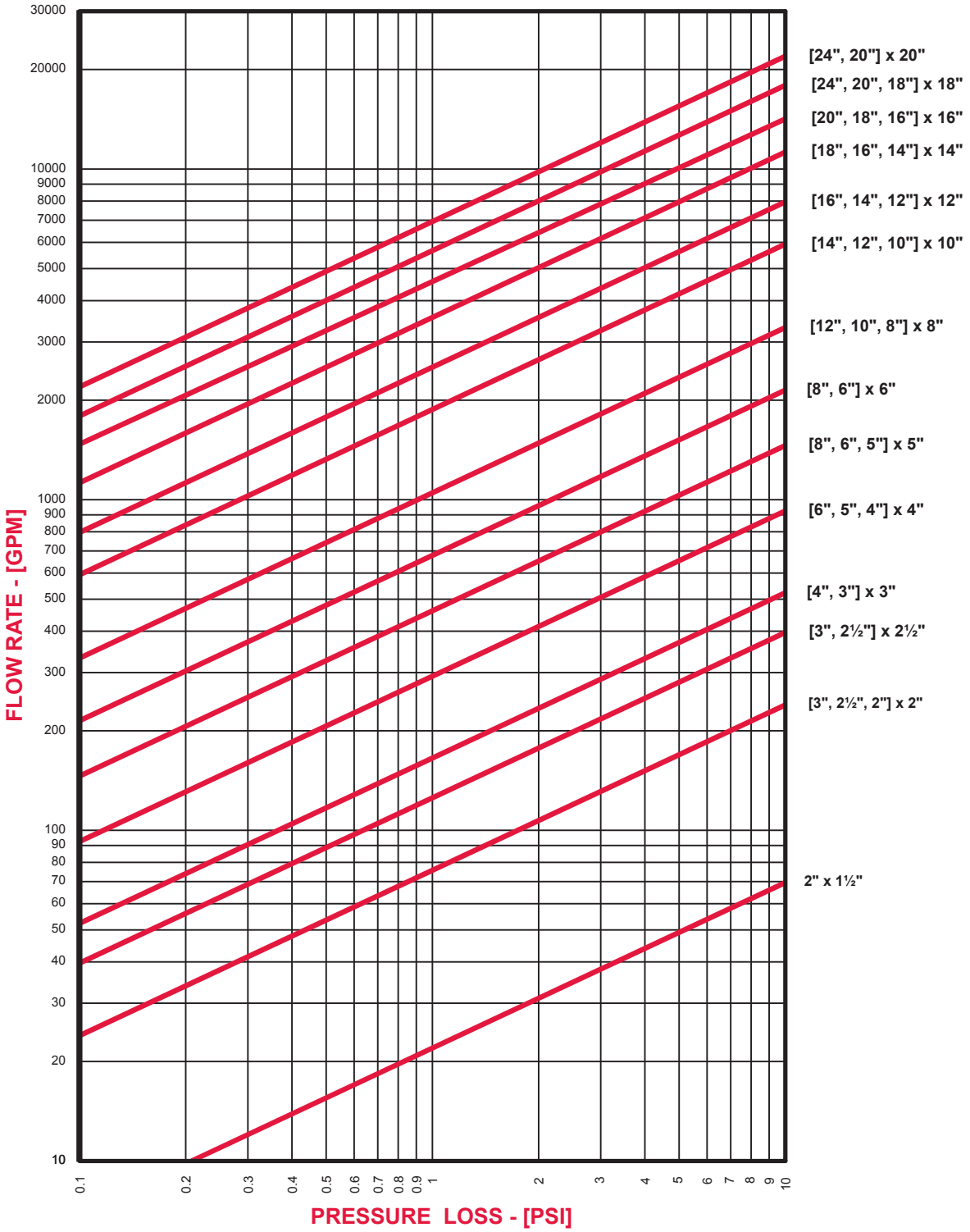

KECKLEY

PRESSURE DROP CHART

Triple Duty Valve (Styles TDV)

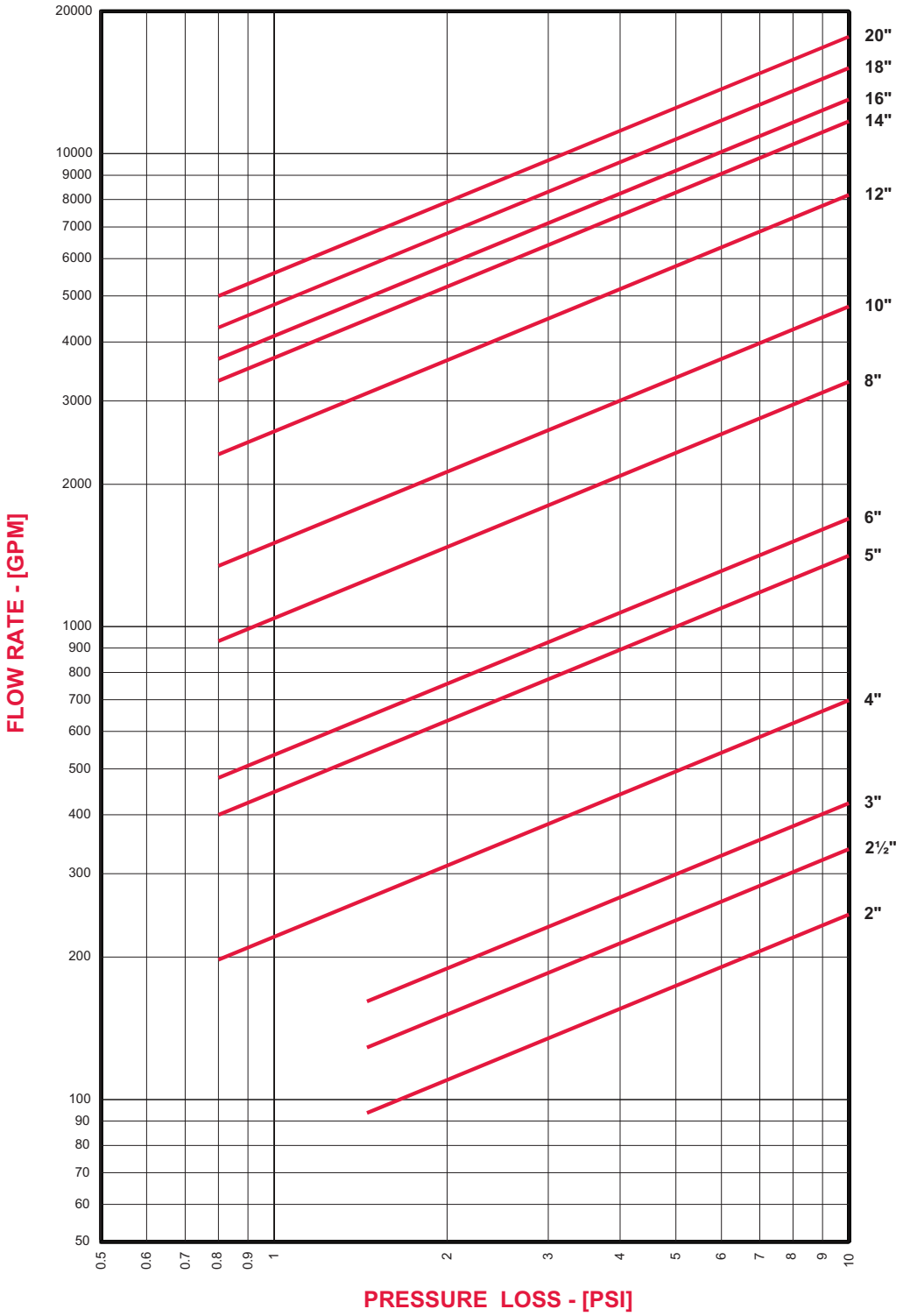

KECKLEY

BULLETIN NO. 8711-7

FLOAT AND LEVER VALVES

Globe or Angle, Screwed or Flanged All Sizes

800-KECKLEY (800-532-5539)
847/674-8422
FAX: 847/674-2106
E-MAIL: SALES@KECKLEY.COM
WEB SITE: WWW.KECKLEY.COM

NO QUESTION. WE HAVE THE ANSWERS

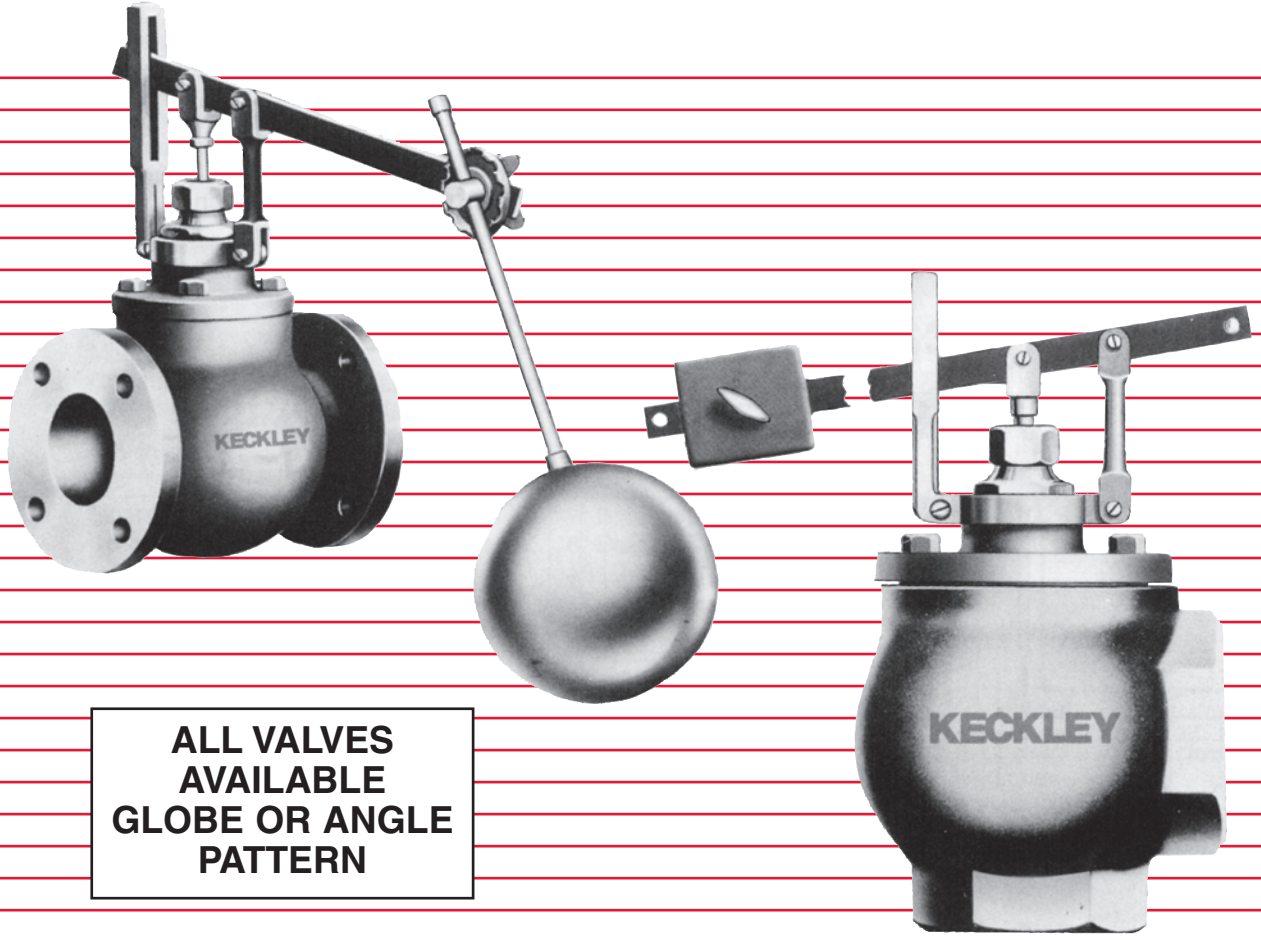

ALL VALVES AVAILABLE GLOBE OR ANGLE PATTERN

KECKLEY COMPANY ● 3400 Cleveland Street ● P.O. Box 67 ● Skokie, Illinois 60076

FLOAT & LEVER VALVES

Since 1914, Keckley engineering and manufacturing has been working for industry and commercial building installations worldwide. Keckley Float and Lever Valves excel in their construction and performance.

With the purchase of Klipfel Valves Inc. in 1962, there was a combining of engineering talents and features of both valve companies resulting today in this complete line. Float Valves are actuated Lever Valves designed to control the level of liquids. Lever Valves are designed to control the flow of liquids, gases or steam. This can be done by manual operation, float boxes or mechanisms, electric motors or other actuators through linkage to the lever of the valve.

Typical Applications:

- Open or closed storage tanks
- Vats
- Process tanks
- Cooling towers
- Basins
- Standpipes
- Receivers
- Feed water heaters
- Condensate tanks
- Reservoirs
- Sprinkler services
- Swimming pools

All valves can be used on filling control (close on level rise) or drainage control (open on level rise) applications.

Options:

- Floats — all materials, sizes and connections
- Float Rods — brass, stainless steel or galvanized pipe
- Swivel Adaptor — vertical operation of float rod; replaces rosette and joins the lever and float rod
- Trim — main valve and seat can be brass or stainless steel
- Discs and Cups — Teflon for temperatures exceeding 125° F to maximum of 350°F.

When ordering, specify:

1) Valve size
2) Keckley type number
3) Connections (screwed or flanged)
4) Globe or angle pattern
5) Media
6) Maximum operating pressure
7) Discharge pressure of valve if other than atmosphere
8) Maximum temperature

Any additional information to help us insure a correct selection.

Typical Installations

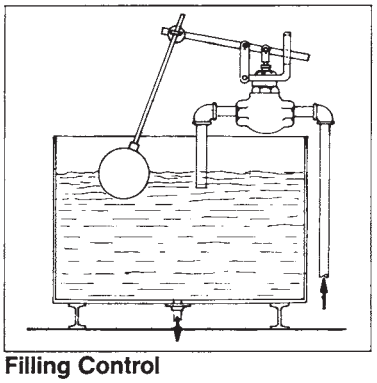

Filling Control

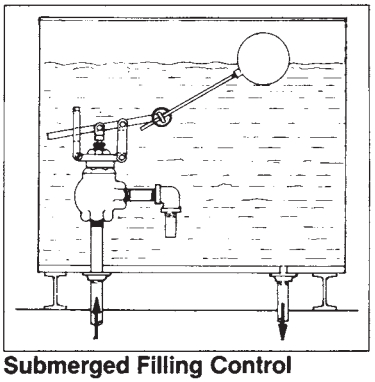

Submerged Filling Control

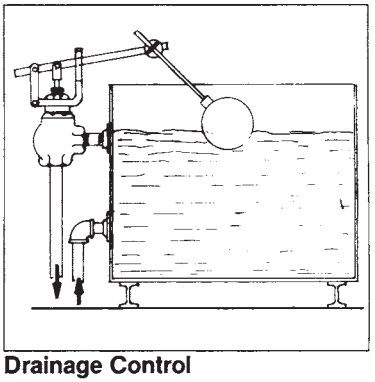

Drainage Control

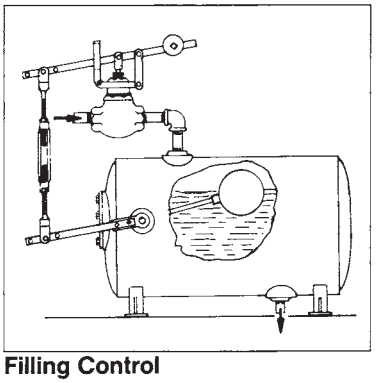

Filling Control

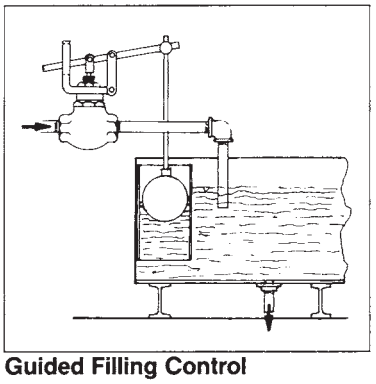

Guided Filling Control

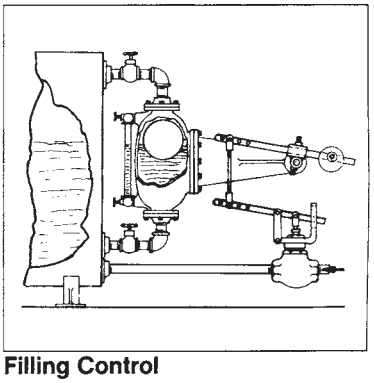

Filling Control

KECKLEY COMPANY ● 3400 Cleveland Street ● P.O. Box 67 ● Skokie, Illinois 60076

CONDENSED DESCRIPTION OF FLOAT AND LEVER VALVES STANDARD CONSTRUCTION

Types **Float Valve** **Lever Valve**	 **#27** **#62**	 **#7** **#73**	 **#77** **#773**
Sizes	½" - 12"	½" - 2"	2" - 12"
How Operated	Direct	Internal Pilot	Internal Pilot
Double Seated/ Not Tight Closing	X	—	—
Single Seated/ Tight Closing	—	X	X
Inner Valve	Bronze	Neoprene Disc	Neoprene Disc
Construction (Body)			
Standard	Bronze ¼" - 1½" Cast Iron 2"—Larger		
Special	Consult Factory Bronze, Cast Iron, Cast Stainless Steel — Available in Most Sizes		
Connections	Screwed Flanged	½" - 3" 2" & Larger	
Max. Temperature (Std.)	406°F	125°F	125°F
Consult factory for high temperature trim.			
Globe	X	X	X
Angle-side Inlet	X	X	—
Angle-bottom Inlet	—	—	X
Float Size Standard	½" - 2" Valves 2½" - 4" Valves 5" - 8" Valves 10" - 12" Valves	7" Diameter 8" Diameter 10" Diameter 12" Diameter	Type 304 Stainless Steel Type 304 Stainless Steel Type 304 Stainless Steel Type 304 Stainless Steel
Other Float Materials - Consult Factory			
Allowable Pressure Drop	Low-Med.	Low-Med.	Low-High
Max. Working Pressure	Varies Per Size	Varies Per Size	250 psi
See Bulletin Page	4-6	7-9	7-9

Level Controllers
Used to Operate the Above Lever Valves

Types

20 Float Box	For Valve Sizes ½" - 6"	Cast Iron Body	Screwed or Std. Flanged	See Bulletin Page 10

FLOAT VALVE NO. 27
LEVER VALVE NO. 62

Balanced Double Seated (not tight closing) Globe or Angle

BRONZE ● CAST IRON ● STAINLESS STEEL BODY

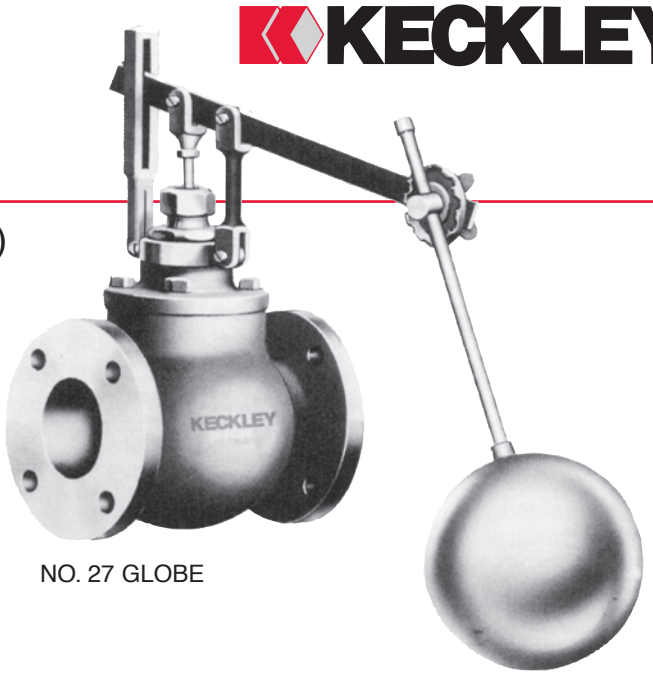

NO. 27 GLOBE

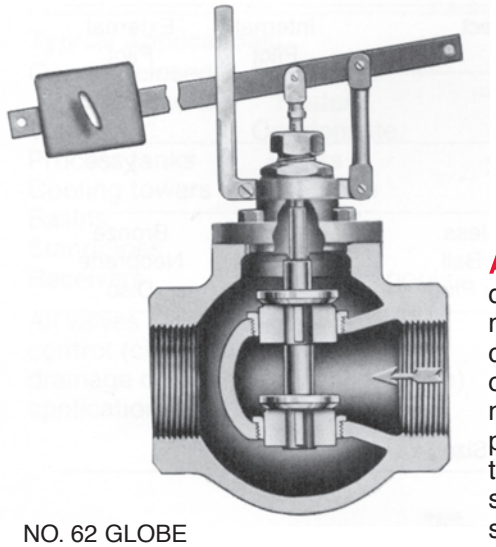

NO. 62 GLOBE

Application/Service: The No. 27 double seated float valve is the type most widely used for the automatic control of the supply of liquids to an open tank where dead-end closing is not essential and valve inlet pressures are normal. Many thousands are in use on large and small water, oil and chemical storage tanks in all types of industries.

Where a drop-tight closing float valve, or a valve for higher than ordinary pressure is required, one of the single seated valves, described on the following pages, should be selected. The maximum inlet pressures for the sizes of the No. 27 valve are shown in the table on the opposite page.

The No. 62 lever valve is the same valve minus the float, float rod and rosette. It may be operated by a float inside a closed tank or float cage; by hand or electric solenoid as a quick opening valve; and wherever a double seated sliding stem valve is required.

Construction: These valves are all metal, simple in operation, sturdy in construction and of the best materials and workmanship. A double seated inner valve, as illustrated, is standard. Both angle and globe pattern bodies are available in all the sizes. The standard valve can be adapted to nearly any installation.

The swivel yoke, which supports the lever, can be turned and secured at any angle. The length and angle of the float rod can be adjusted at the rosette so that the valve can be easily adapted to various locations.

Materials: In sizes 1½ inch and smaller, the No. 27 and No. 62 valves have bronze bodies and trim with integral seats. In sizes 2 inches and larger, the standard bodies are cast iron with bronze trim and removable seats. Stainless steel trim can also be supplied. All iron, all bronze and all stainless steel valves can be supplied at extra cost in many sizes.

Operation: As ordinarily assembled and used as a filling controller, the inner valve in the No. 27 rises and opens as the float drops with the water level. With the lever reversed, the float and inner valve move in the same direction so that the valve will open on level rise and can be used as a drainage controller.

In the same manner, the No. 62 valve may be assembled for either direct or reverse movement.

KECKLEY COMPANY ● 3400 Cleveland Street ● P.O. Box 67 ● Skokie, Illinois 60076

FLOAT VALVE NO. 27

Balanced Double Seated (not tight closing) Globe or Angle

BRONZE ● CAST IRON ● STAINLESS STEEL BODY

NO. 27 GLOBE

Installation: A float valve when used on a water tank installation is best located near the surface of the water with the float where it will be least disturbed by waves. The discharge pipe extending below the surface helps to prevent waves. Where sanitary regulations forbid the use of such a discharge pipe because of the possibility of siphoning out of the tank, the discharge may flow into a funnel and perforated pipe. The angle pattern will avoid the need for an elbow

Note that the inlet of the No. 27 valve is at the side of the angle pattern body.

The valve stem should be vertical to avoid friction and wear on the inner valve sliding on its side. The valve will operate just as well if inverted, but the lever must be reversed. If space limitations require the valve to be installed with stem horizontal in a vertical pipe, a lever bent 90° can be supplied. The valve may be submerged, if desired.

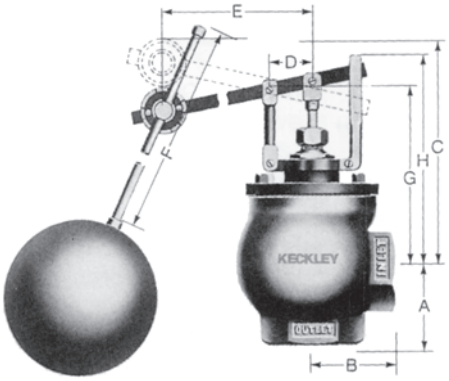

NO. 27 ANGLE
(SIDE INLET)

LIST OF PARTS

Body
Inner Valve
Seat Bushings {upper, lower}
Valve Stem
Stem Clevis

Packing Box
Cover
Swivel Guide Yoke
Guide Arm
Lever

Float
Float Rod
Float Rod Bolt and Nut
Rosette

NO. 27—DIMENSIONS—WEIGHTS (approximate)

Size Inches	A—Inches Angle Pattern			B—Inches Angle Pattern			Face to Face-Inches Globe Pattern			Angle and Globe Inches					Float Diameter Inches	Shipping Weight-Lbs			Capacity Factor See Page 11	Max. Inlet Pressure
	Std Scr.	Std Flg.	Ex. Hvy. Flg.	Std. Scr.	Std Flg.	Ex. Hvy. Flg.	Std. Scr	Std. Flg.	Ex. Hvy. Flg.	C	D	E	F	G		Std. Scr.	Std. Flg.	Ex. Hvy. Flg.		
½	2	—	—	2	—	—	4⅛	—	—	8⅝	1 15/16	13 11/16	16	5	7	10	—	—	.04	150
¾	2	—	—	2	—	—	4⅛	—	—	8⅝	1 15/16	13 11/16	16	5	7	10	—	—	.15	150
1	2⅛	—	—	2⅛	—	—	4⅜	—	—	8¾	1 15/16	13 11/16	16	5 3/16	7	13	—	—	.24	150
1¼	2¼	—	—	2¼	—	—	4½	—	—	8⅞	1 15/16	13 11/16	16	5¼	7	14	—	—	.40	120
1½	2¼	—	—	2¼	—	—	4½	—	—	8⅞	1 15/16	13 11/16	16	5¼	7	14	—	—	.57	100
2	4¼	4¼	4½	3¼	3¼	3½	6½	6½	7	12¾	2	17⅜	16	8½	7	29	38	42	1.4	75
2½	5¼	5⅞	6 3/16	3 15/16	4 1/16	4⅜	7⅞	8 3/16	8 13/16	13¾	2	17⅜	18	9¼	8	45	65	75	1.7	60
3	5¾	5¾	6⅛	4⅝	4⅝	5	9¼	9¼	10	14¼	2	17⅜	18	9⅝	8	67	86	100	2.3	50
4	—	6 15/16	7¼	—	5⅜	5 11/16	—	10¾	11⅜	14½	2	17⅞	18	10⅝	8	—	120	137	4.4	35
5	—	6⅝	7 1/16	—	6⅝	7 1/16	—	12	12⅞	19	2½	20½	24	12½	10	—	168	190	7.5	30
6	—	8 7/16	8⅞	—	6½	6 15/16	—	13	13⅞	19¾	2½	20½	24	13	10	—	194	229	10.2	25
8	—	8⅜	8⅞	—	8⅜	8⅞	—	16¾	17¾	25⅞	3	28	30	16⅜	10	—	342	409	15.7	20
10	—	10¼	10 15/16	—	10¼	10 15/16	—	20¼	21⅝	29¾	3	41	30	18½	12	—	480	572	25.0	15
12	—	11⅞	12⅝	—	11⅞	12⅝	—	22⅝	24⅛	32	3	41	30	20	12	—	715	853	40.0	12

Certified Dimensional Sheets Available

LEVER VALVE NO. 62

Balanced Double Seated (not tight closing) Globe or Angle

BRONZE ● CAST IRON ● STAINLESS STEEL BODY

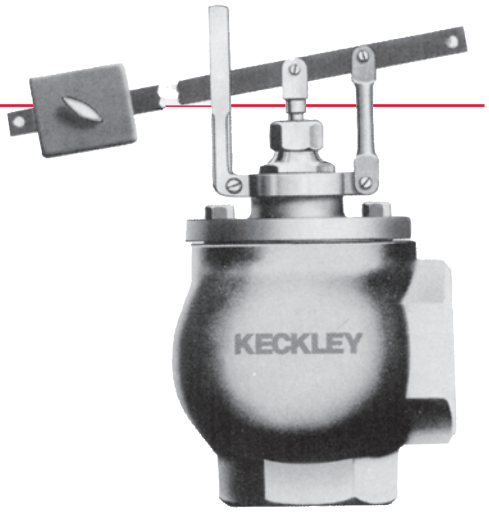

NO. 62 ANGLE

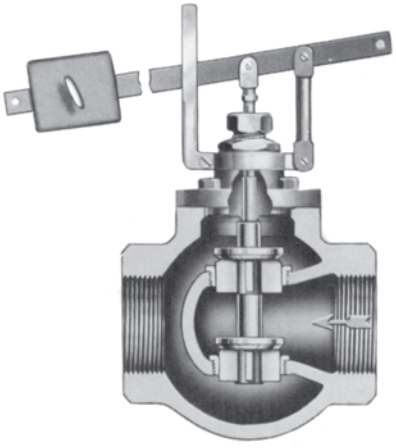

NO. 62 GLOBE

Application/Service: The No. 62 Lever Valve is adapted for manual control of steam, water and air lines wherever a quick acting double seated valve is required, but where perfectly tight closing is not essential.

It is widely used on feed water heaters and on open and closed tanks and operated by an internal float such as the No. 20, shown on page 10. It may also be operated by an electric solenoid, diaphragm motor, or hydraulic cylinder.

Construction: All sizes are fitted with swivel yokes, so that the lever can be turned to any desired direction. The lever can be reversed to close the valve when the longer end is lifted. The counterweight is used on either end to balance levers or rods which may form part of the operating mechanism. Standard construction includes **double seated inner valve** not designed for tight closing applications.

LIST OF PARTS

Body
Inner Valve
Seat Bushings { upper / lower
Valve Stem
Stem Clevis
Packing Box
Cover
Swivel Guide Yoke
Guide Arm
Lever
Weight

NO. 62—DIMENSIONS—WEIGHTS (approximate)

Size Inches	A—Inches Angle Pattern			Face to Face-Inches Globe Pattern			B—Inches Angle Pattern			Globe and Angle—Inches Note page 5 letter code					Shipping Weight-Lbs.			Capacity Factor	Max.
	Std Scr.	Std Flg.	Ex. Hvy. Flg.	Std. Scr.	Std Flg.	Ex. Hvy. Flg.	Std. Scr	Std. Flg.	Ex. Hvy. Flg.	C	D	E	F	G	Std. Scr.	Std. Flg.	Ex. Hvy. Flg.	See Page 15	Inlet Pressure
½	2	—	—	4⅛	—	—	2	—	—	8⅛	1 15/16	11¾	6 5/16	5	10	—	—	.04	150
¾	2	—	—	4⅛	—	—	2	—	—	8⅛	1 15/16	11¾	6 5/16	5	10	—	—	.15	150
1	2⅛	—	—	4⅜	—	—	2⅛	—	—	8 5/16	1 15/16	11¾	6 5/16	5 3/16	11	—	—	.24	150
1¼	2¼	—	—	4½	—	—	2¼	—	—	8½	1 15/16	11¾	6 5/16	5¼	11	—	—	.40	120
1½	2¼	—	—	4½	—	—	2¼	—	—	8½	1 15/16	11¾	6 5/16	5¼	12	—	—	.57	100
2	4¼	4¼	4½	6½	6½	7	3¼	3¼	3½	13¼	2	15⅜	6⅝	8½	26	36	40	1.40	75
2½	5¼	5⅞	6 3/16	7⅞	8 3/16	8 13/16	3 15/16	4⅛	4⅜	13½	2	15⅜	6⅝	9¼	53	64	70	1.70	60
3	5¾	5¾	6⅛	9¼	9¼	10	4⅝	4⅝	5	14	2	15⅜	6⅝	9⅝	73	83	97	2.30	50
4	—	6 15/16	7¼	—	10¾	11⅜	—	5⅜	5 11/16	14⅛	2	15⅜	6⅝	10⅝	—	117	134	4.40	35
5	—	6⅝	7 1/16	—	12	12⅞	—	6⅝	7 1/16	19½	2½	16¾	9	12½	—	163	185	7.50	30
6	—	8 7/16	8⅞	—	13	13⅞	—	6½	6 15/16	20¼	2½	16¾	9	13	—	188	223	10.20	25
8	—	8⅜	8⅞	—	16¾	17¾	—	8⅜	8⅞	22⅞	3	19	13	16⅜	—	335	402	15.70	20
10	—	10¼	10 15/16	—	20¼	21⅝	—	10¼	10 15/16	24¾	3	19	13	18½	—	472	564	25.00	15
12	—	11⅞	12⅝	—	22⅝	24⅛	—	11⅞	12⅝	26⅝	3	19	13	20	—	708	846	40.00	12

Certified Dimensional Sheets Available

KECKLEY COMPANY ● 3400 Cleveland Street ● P.O. Box 67 ● Skokie, Illinois 60076

FLOAT VALVE NO. 7
FLOAT VALVE NO. 77

Single Seated, Dead End Service (tight closing) Globe or Angle

BRONZE ● CAST IRON ● STAINLESS STEEL BODY

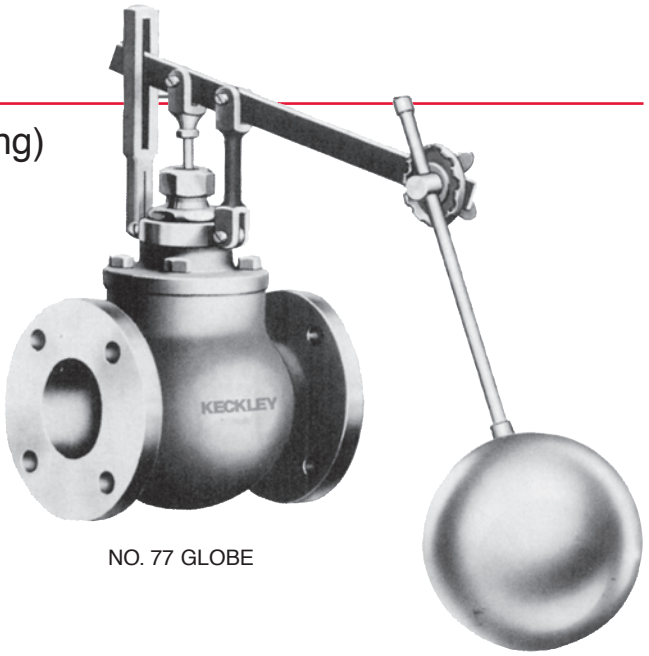

NO. 77 GLOBE

Application/Service: The No. 7 and 77 pilot controlled float valves are recommended when tight closing is essential. They are commonly used to maintain a water level in an open tank. They are best suited for clean liquids not injurious to neoprene, leather or brass parts. Standard design temperature is 125°F. For higher temperatures up to 350°F, the neoprene disc in the No. 7 or neoprene disc and leather cup in the No. 77 are replaced by teflon parts.

Construction: Referring to the sectional views on page 8, the inner valve consists of a hollow bronze piston, somewhat larger in diameter than the seat bore, and carrying the disc holder. The composition disc may be replaced when worn. The soft disc will accommodate itself to grit and wear and still close tight where a metal to metal construction would leak.

The piston slides in a stationary bronze cylinder attached to the cover or body. The pilot port is opened and closed by the end of the stem which is moved by the lever. A pin through the stem at its lower end permits the inner valve to be lifted by the stem. The guide yoke, with the lever and float, can be turned and secured at any angle. The angle and length of float rod can be adjusted at the rosette.

Operation: In the No. 7 valve, made in sizes 2 inches and smaller, water from the inlet enters the space above the piston through a small hole in the piston head. While the pilot port is open, this water escapes freely through the hollow valve post to the outlet. The excess pressure under the piston, in relation to the pressure above it, and the weight of the float hold the valve open.

On closing the pilot port, the water pressure above the piston quickly rises to equal and balance the inlet pressure under the piston. Thereupon the inlet pressure above the disc holder closes the valve. No leather cup is required.

The disc closes in the direction of the flow through the No. 7 valve. In the larger valves and for the higher pressures, the “pull” of the water in passing through the valve seat may cause the valve to close suddenly from a nearly closed position. For this reason, this valve is not made in sizes above 2 inches.

In the No. 77 valve, made in sizes 2 inches and larger, the inlet pressure is under the disc. Water enters the chamber above the piston through the strainer and the central and diagonal passages. If the pilot port is open, this water escapes freely to the valve outlet, so that the inlet pressure under the disc opens the valve. When the pilot port is closed, the water pressure above the piston quickly rises to equal the inlet pressure under the disc and, due to the larger piston area, the inner valve is moved toward the seat.

The disc closes against the inlet pressure and sudden closing cannot occur in the No. 77. However, this valve requires the piston to be fitted with a leather cup, the friction of which may cause sluggishness on low inlet pressures.

Maximum inlet pressures for both the No. 7 and No. 77 are shown in the table on the next page.

FLOAT VALVE NO. 7
FLOAT VALVE NO. 77

Internal Pilot Control, Single Seated, Dead End Service, Globe or Angle

BRONZE ● CAST IRON ● STAINLESS STEEL BODY

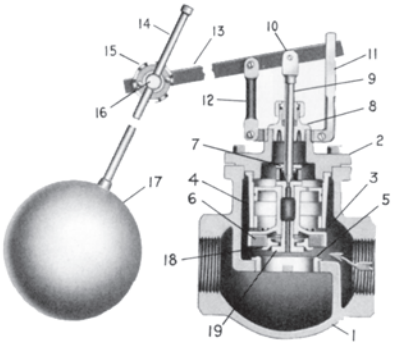

NO. 7 GLOBE

LIST OF PARTS

1 — Body
2 — Cover*
3 — Inner Valve
4 — Cylinder*
5 — Seat Bushing*
6 — Composition Valve Disc
7 — Port Stud*
8 — Packing Box
9 — Valve Stem
10 — Stem Clevis
11 — Swivel Guide Yoke
12 — Guide Arm
13 — Lever
14 — Float Rod
15 — Rosette
16 — Float Rod Bolt
17 — Float
18 — Disc Plate
19 — Disc Plate Screw*
+20 — Strainer*
+21 — Leather Cup*
+22 — Lock Nut*

***Parts used only in sizes 2" and larger.**
+ Used in No. 77 only.

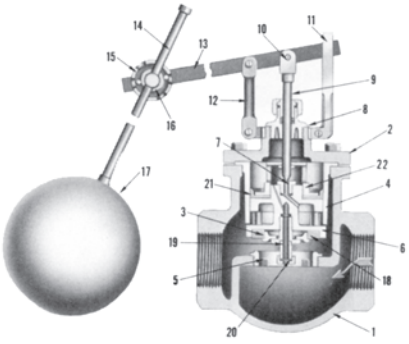

NO. 77 GLOBE

Materials: No. 7 valves in sizes 1½ inch and smaller have bronze bodies and integral seats, screwed ends only. The 2 inch No. 7 and all sizes of the No. 77 have cast iron bodies, with renewable seats, screwed or flanged ends in sizes 2 inch to 3 inch inclusive, flanged ends only above 3 inch. All sizes of both valves have bronze trim and renewable composition discs.

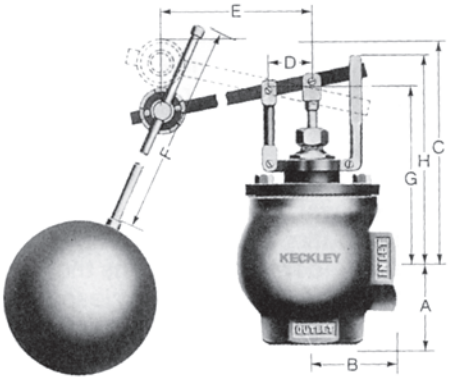

NO. 7 ANGLE
(SIDE INLET)

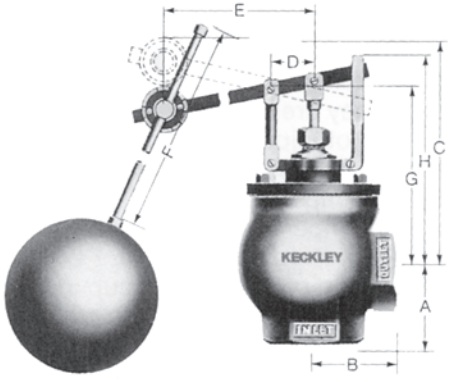

NO. 77 ANGLE
(BOTTOM INLET)

NOS. 7 and 77—DIMENSIONS—WEIGHTS (approximate)

	Size Inches	A or B—Inches Angle Pattern			Face to Face—Inches Globe Pattern			Angle Pattern—Inches						Float Diameter Inches	Shipping Weight-Lbs. Globe Pattern			Capacity Factor Page 11	Max.** Inlet Pressure
		Std Scr.	Std Flg.	Ex. Hvy. Flg.	Std. Scr.	Std Flg.	Ex. Hvy. Flg.	C	D	E	F	G	H		Std. Scr.	Std. Flg.	Ex. Hvy. Flg.		
NO. 7	½ & ¾	2	—	—	4¼	—	—	8 7/16	1 15/16	13 11/16	16	5 3/16	6 5/16	7	11	—	—	.17	130
	1	2 1/16	—	—	5	—	—	8¾	1 15/16	13 11/16	16	5½	6⅝	7	13	—	—	.35	100
	1¼	2⅛	—	—	5⅛	—	—	8¾	1 15/16	13 11/16	16	5½	6⅝	7	14	—	—	.50	80
	1½	2½	—	—	5¼	—	—	9	1 15/16	13 11/16	16	5¾	6⅞	7	14	—	—	.80	65
	2	3 7/16	4⅛	4⅜	7 9/16	8¼	8¾	12⅜	1 15/16	17⅜	16	8	10⅛	7	35	45	60	1.6	50
NO. 77	2	3 7/16	4⅛	4⅜	7 9/16	8¼	8¾	12⅜	1 15/16	17⅜	16	8	10⅛	7	35	45	60	1.6	250
	2½	3 15/16	4¾	5 1/16	8¾	9½	10⅛	12¾	1 15/16	17⅜	18	8½	10⅝	8	55	68	72	2.5	250
	3	4½	5¼	5⅝	9¾	10½	11¼	13⅛	1 15/16	17⅜	18	9⅛	11¼	8	71	80	115	3.5	250
	4	—	6⅛	6 7/16	—	12¼	12⅞	13⅝	1 15/16	17⅜	18	9⅜	11½	8	—	140	145	6.5	250
	5	—	7¼	7 11/16	—	14½	15⅜	18½	2½	20½	24	11¼	14¼	10	—	235	195	10.0	250
	6	—	8⅛	8 9/16	—	16¼	17⅛	19¾	2½	20½	24	12½	15⅝	10	—	235	240	14.0	250
	8	—	9⅛	9⅝	—	19⅛	20⅛	25	3	28	30	16¼	21	10	—	395	445	26.0	250
	10	globe pattern only		—	—	20⅛	21½	36	5	41	30	29	35	12	—	650	700	41.0	250

****The absolute minimum operating pressure for the #77 Float Valve is 5 psi for sizes 2" through 6" and 10 psi for sizes 8" and 10".**

The neck of the globe body is slightly longer than the neck of the angle body. Therefore dimensions G, H, and C are slightly greater than those shown above. Certified Dimensional Sheets Available.

KECKLEY COMPANY ● 3400 Cleveland Street ● P.O. Box 67 ● Skokie, Illinois 60076

LEVER VALVE NO. 73
LEVER VALVE NO. 773

Internal Pilot Control, Single Seated, Dead End Service, Globe or Angle

BRONZE ● CAST IRON ● STAINLESS STEEL BODY

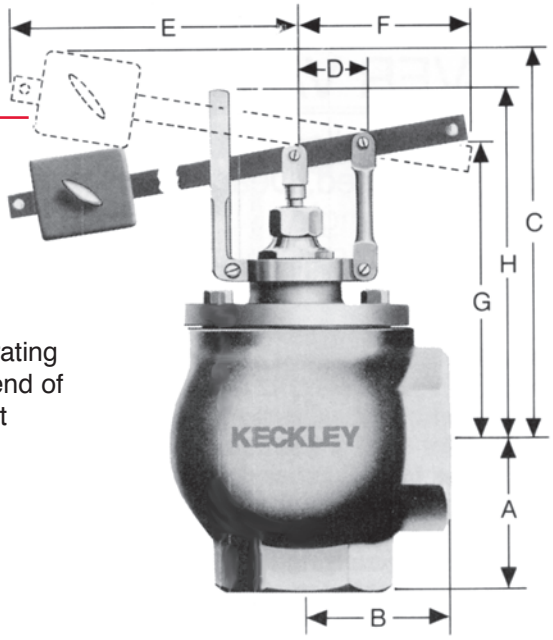

Application/Service: These single seated, internal pilot type lever valves are adapted for operation by an enclosed float (page 10) or by hand, solenoid, diaphragm motor, or other means, wherever a tight-closing, quick-acting, easily operated valve is required.

Operation: The lever valves on this page have the same internal construction and operate in the same manner as the float valves described on pages 7 and 8. They are also adapted to the same pressure and temperature conditions as the corresponding float valves.

Materials: No. 73 valve in sizes 1½ inch and smaller have bronze bodies and integral seats, screwed ends only. The 2 inch No. 73 and all sizes of the No. 773 have cast iron bodies, with renewable seats, screwed or flanged ends in sizes 2 inch to 3 inch inclusive, flanged ends only above 3 inch. All sizes of both valves have bronze trim and renewable composition discs.

They are suitable for water and other ordinary liquids. The operating rod may be attached to either end of the lever with the counterweight located as required.

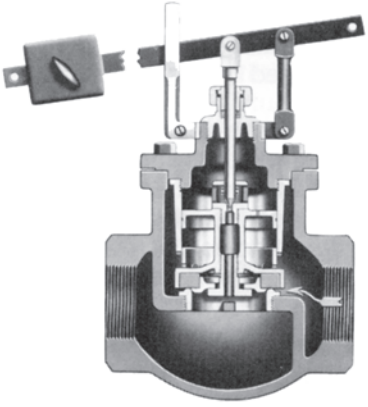

The No. 73 Single Seated Lever Valve is the same as No. 7, shown and described on pages 7 and 8, minus float, float rod and rosette, and plus a counterweight.

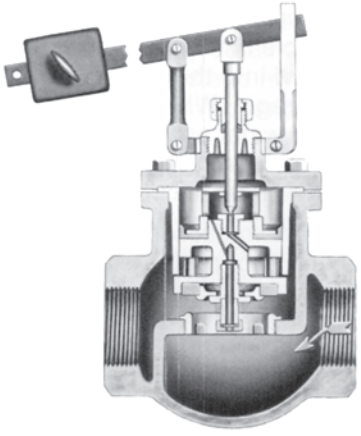

The No. 773 Single Seated Lever Valve is the same as No. 77, shown and described on pages 7 and 8, minus float, float rod and rosette, and plus a counterweight.

NOS. 73 and 773—DIMENSIONS—WEIGHTS (approximate)

	Size Inches	A or B—Inches Angle Pattern			Face to Face—Inches Globe Pattern			Angle Pattern—Inches						Shipping Weight-Lbs. Globe Pattern			Capacity Factor Page 11	Max.** Inlet Pressure
		Std Scr.	Std Flg.	Ex. Hvy. Flg.	Std. Scr.	Std Flg.	Ex. Hvy. Flg.	C	D	E	F	G	H	Std. Scr.	Std. Flg.	Ex. Hvy. Flg.		
NO. 73	½ & ¾	2	—	—	4¼	—	—	7 15/16	1 15/16	11¾	6 5/16	5 3/16	6 5/16	10	—	—	.17	130
	1	2 1/16	—	—	5	—	—	8¼	1 15/16	11¾	6 5/16	5½	6⅝	12	—	—	.35	100
	1¼	2⅛	—	—	5⅛	—	—	8¼	1 15/16	11¾	6 5/16	5½	6⅝	13	—	—	.50	80
	1½	2½	—	—	5¼	—	—	8½	1 15/16	11¾	6 5/16	5¾	6⅞	14	—	—	.80	65
	2	3 7/16	4⅛	4⅜	7 9/16	8¼	8¾	12	1 15/16	15⅜	6⅝	8	10⅛	30	48	56	1.6	50
NO. 773	2	3 7/16	4⅛	4⅜	7 9/16	8¼	8¾	12	1 15/16	15⅜	6⅝	8	10⅛	34	48	56	1.6	250
	2½	3 15/16	4¾	5 1/16	8¾	9½	10⅛	12⅜	1 15/16	15⅜	6⅝	8½	10⅝	53	65	72	2.5	250
	3	4½	5¼	5⅝	9¾	10½	11¼	12¾	1 15/16	15⅜	6⅝	9⅛	11¼	73	105	110	3.5	250
	4	4¾	6⅛	6 7/16	—	12¼	12⅞	13¼	1 15/16	15⅜	6⅝	9⅜	11½	—	135	140	6.5	250
	5	—	7¼	7 11/16	—	14½	15⅝	18¾	2½	16¾	8¼	11¼	14¼	—	170	195	10.0	250
	6	—	8⅛	8 9/16	—	16¼	17⅛	20¾	2½	16¾	8¼	12½	15⅝	—	230	240	14.0	250
	8	—	9⅛	9⅝	—	19⅛	20⅛	23	3	19	13	16¼	21	—	395	445	26.0	250
	10	globe pattern only		—	—	20⅛	21½	40	5	41	13½	29	35	—	650	700	41.0	250

****The absolute minimum operating pressure for the #77 Float Valve is 5 psi for sizes 2" through 6" and 10 psi for sizes 8" and 10".**

The neck of the globe body is slightly longer than the neck of the angle body. Therefore dimensions G, H, and C are slightly greater than those shown above.

Certified Dimensional Sheets Available.

FLOAT BOX NO. 20

6" or 8" Floats
Cast Iron Body With Ball Bearing Stuffing Box

No. 20 Float Box
Application/Service: Float Boxes are used in connection with closed tanks where fluctuation of the liquid level in the tank is the governing factor in the control of the lever valve, signal switch, motor or other equipment. The entire unit is mounted outside the tank where it can be easily installed, adjusted, inspected and serviced.

By placing the Box in the same horizontal plane as the tank liquid level with equalizing connections above and below the level and the valve suitably linked to the Box, the tank level may be automatically maintained whether the flow is into or out of the tank.

Typical applications are with a No. 62, 73 or 773 lever valve used as a level controller for hot or cold water.

Construction: The packing box has outboard ball bearing with bolted gland reducing friction and wear to a minimum, the rotary stem is stainless steel. The float rod is brass when used with a 6 inch float and galvanized pipe when used with an 8 inch float. A gauge glass and bracketed lever and counterweight completes the Unit.

Equalizing pipe connections are 1" screwed on the Box with the 6" float, 1½" standard flanged or screwed connections on the 8" Box. Cast iron Float Boxes are suitable for pressures up to 250 psi and maximum temperatures of 406°F.

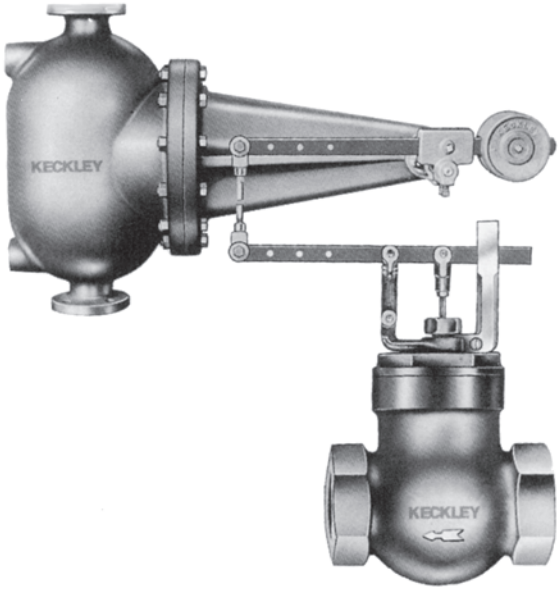

NO. 20 FLOAT BOX WITH CONTROL VALVE

NO. 20 FLOAT BOX

Size of Lever Valve	½	¾	1	1¼	1½	2	2½	3	4	5	6
Size of Float	6	6	6	6	8	8	8	8	8	8	8
Approximate Shipping Weight	100	100	100	100	190	190	190	190	190	190	190

KECKLEY COMPANY ● 3400 Cleveland Street ● P.O. Box 67 ● Skokie, Illinois 60076

SELECTING SIZE OF FLOAT AND LEVER VALVE

The *maximum* capacity of a float or lever valve depends on its size and on the pressure difference — or drop — between the inlet and outlet when the valve is wide open. **It is recommended that a valve be selected having 50% to 100% more capacity than the normal demand.** For example, if the normal requirement is 100 gallons per minute, a valve having 150 to 200 G.P.M. capacity should be selected. This will result in less variation in water level, and provide reserve capacity in case of low water pressure or unusual demand. *The maximum capacity is the product of the flow per square inch of port area (Orifice Capacity) multiplied by the equivalent port area of the valve (Capacity Factor).*

MAXIMUM CAPACITIES OF NOS. 27 FLOAT AND 62 LEVER VALVES U.S. GALLONS PER MINUTE OF WATER

Size Inches	Pressure Drop between Inlet and Outlet in Pounds per Square Inch																	Capacity Factor
	1	3	5	10	15	20	25	30	35	40	45	50	60	70	80	90	100	
½"	1.5	2.6	3	5	6	7	7	8	9	10	10	11	12	13	14	14	15	.04
¾"	5.7	10	13	18	22	25	28	31	34	36	38	40	44	48	51	54	57	.15
1"	9.1	16	20	29	35	40	46	50	54	58	61	64	70	76	81	86	91	.24
1¼"	15	26	34	48	58	68	76	83	90	97	102	108	118	127	136	144	152	.40
1½"	22	38	48	68	83	97	108	118	128	138	145	154	168	181	194	205	216	.57
2"	53	92	119	168	204	236	266	290	314	339	357	377	412	446	447	—	—	1.4
2½"	64	111	144	204	248	287	323	352	382	410	433	458	500	—	—	—	—	1.7
3"	87	150	196	276	335	389	437	476	518	556	586	620	—	—	—	—	—	2.3
4"	167	290	374	528	642	743	846	910	990	—	—	—	—	—	—	—	—	4.4
5"	285	493	637	900	1095	1270	1425	1550	—	—	—	—	—	—	—	—	—	7.5
6"	388	672	867	1225	1490	1725	1940	—	—	—	—	—	—	—	—	—	—	10.2
8"	596	1030	1335	1885	2290	2655	—	—	—	—	—	—	—	—	—	—	—	15.7
10"	950	1645	2125	3000	3650	—	—	—	—	—	—	—	—	—	—	—	—	25
12"	1520	2630	3400	4800	5830	—	—	—	—	—	—	—	Capacities are in U.S. Gallons. The Imperial Gallon = 1.2 U.S. Gallons.					40
1 sq. in. Orifice Capac.	38	66	85	120	147	170	190	208	225	240	255	269	294	318	340	360	380	1

For other liquids divide above G.P.M. by $\sqrt{\text{specific gravity of the liquid}}$.

MAXIMUM CAPACITIES OF NOS. 7, 77 FLOAT AND 73, 773 LEVER VALVES U.S. GALLONS PER MINUTE OF WATER

Size Inches	Pressure Drop between Inlet and Outlet in Pounds per Square Inch																	Capacity Factor
	1	3	5	10	15	20	25	30	35	40	45	50	60	70	80	90	100	
¾"	6.5	11	14	20	25	29	32	35	38	41	43	46	50	54	58	61	65	.17
1"	13	23	30	42	52	50	66	73	79	84	89	94	103	111	119	126	133	.35
1¼"	19	33	42	60	73	85	95	104	112	120	127	134	147	159	170	180	190	.50
1½"	30	53	68	96	118	136	152	166	180	192	204	215	235	254	272	288	304	.80
2"	61	106	136	192	235	272	304	333	360	384	408	430	470	508	544	576	608	1.6
2½"	95	165	212	300	368	425	475	520	562	600	638	672	735	795	850	900	950	2.5
3"	133	231	297	420	514	595	665	728	786	840	892	940	1030	1110	1190	1260	1330	3.5
4"	247	429	552	780	955	1105	1235	1353	1460	1560	1660	1750	1910	2070	2210	2340	2470	6.5
5"	380	660	850	1200	1470	1700	1900	2080	2250	2400	2550	2680	2940	3180	3400	3600	3800	10.0
6"	532	923	1192	1680	2060	2380	2660	2910	3150	3360	3570	3760	4110	4450	4760	5030	5320	14.0
8"	987	1720	2215	3120	3820	4420	4930	5400	5850	6230	6530	6980	7630	8260	8830	9350	9870	26.0
1 sq. in. Orifice Capac.	38	66	85	120	147	170	190	208	225	240	255	269	294	318	340	360	380	

For other liquids divide above G.P.M. by $\sqrt{\text{specific gravity of the liquid}}$.
Capacities are in U.S. Gallons. The Imperial Gallon = 1.2 U.S. Gallons.

Orifice Capacity: Bottom line of tables shows the G.P.M of water which will flow through a standard orifice of 1 sq. in. area at the given pressure drop. These quantities are calculated by the formula:

$$\text{G.P.M. per Sq. In.} = 38\sqrt{\text{Pressure Drop in p.s.i.}}$$
$$= 25\sqrt{\text{Pressure Drop in feet}}$$

For other liquids, divide the above G.P.M. by $\sqrt{\text{specific gravity of liquid}}$.

Capacity Factor: The last column at the right in the tables shows the equivalent square inches of port area of each size of Nos. 27, 62, 7, 77, 73 and 773 valves. These capacity factors are obtained by test, not by measurement of the ports.

Capacity Factors for other types of valves are listed in the last column of each table on the following pages.

KECKLEY COMPANY ● 3400 Cleveland Street ● P.O. Box 67 ● Skokie, Illinois 60076

Printed in U.S.A.

KECKLEY

BULLETIN NO. 8900-5

CONTROL VALVES

Pressure Reducing
Low Pressure +
High Pressure
Diaphragm

Balanced
Back Pressure
Safety & Relief
Drip Pan Elbows

800-KECKLEY (800-532-5539)

847/674-8422
FAX: 847/674-2106
E-MAIL: SALES@KECKLEY.COM
WEB SITE: WWW.KECKLEY.COM

NO QUESTION. WE HAVE THE ANSWERS.

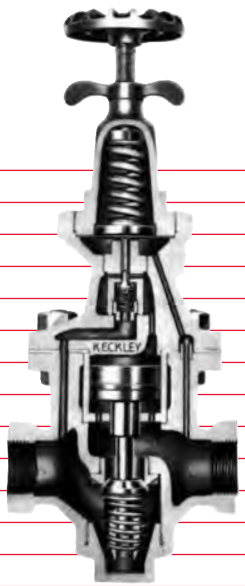

KECKLEY COMPANY • 3400 Cleveland Street • P.O. Box 67 • Skokie, Illinois 60076

How to Order:

1. Name of Regulator, Figure Number, Type, or Catalog Reference.
2. Pipe size of valve.
3. Service (steam. water, air, etc.)
4. Operating Pressures. (Give inlet pressure and required control pressure.)
5. Capacity Requirements.
6. Operating Temperature.
7. Shipping Instructions.

Conditions of Sale:

Prices are F.O.B. Plant, and are subject to change without notice.

All Specification data herein given are subject to change without notice.

Claims for shortage must be made immediately upon receipt of goods.

No material to be returned without written authorization.

We shall not be liable for any special direct, indirect or consequential damages.

No claims for damages, labor or other expense on material furnished will be allowed unless authorized in writing.

All agreements contingent upon strikes, accidents or other causes beyond our control.

All orders are subject to final acceptance and approval by the factory.

Applicable price list does not include excise, sales, use, occupation, or other taxes levied on sales transactions. All such taxes will be billed to our customers.

KECKLEY COMPANY • 3400 Cleveland Street • P.O. Box 67 • Skokie, Illinois 60076

The Company:

Since 1914, KECKLEY engineering and manufacturing has been working for industry and commercial building installations worldwide. KECKLEY products excel in their construction and performance.

With the purchase of Klipfel Valves Inc. in 1962, there was a combining of engineering talents and features of both valve companies resulting today in this complete line.

This Bulletin describes and illustrates these valves:

Pressure Reducing
Diaphragm
Back Pressure
Safety & Relief
Drip Pan Elbows

For more information on KECKLEY Float and Lever Valves, refer to Bulletin No. 8711-7; and for Strainers, Strainer Section.

Sales Engineers and Industrial Distributors:

ALASKA
Anchorage
ALABAMA
Birmingham
Mobile
Montgomery
ARIZONA
Phoenix
ARKANSAS
Little Rock
CALIFORNIA
Los Angeles
San Francisco
COLORADO
Colorado Springs
Denver
DELAWARE
Wilmington
DIST. OF COLUMBIA
Washington
FLORIDA
Jacksonville
Miami
Orlando
Tampa
GEORGIA
Athens
Atlanta
Augusta
Macon
HAWAII
Honolulu
IDAHO
Boise
ILLINOIS
Chicago
Rockford
Springfield
INDIANA
Ft. Wayne
Indianapolis
Kokomo
IOWA
Davenport
Des Moines
KANSAS
Kansas City
Wichita
KENTUCKY
Louisville
Owensboro
Paducah
LOUISIANA
New Orleans
Shreveport
MARYLAND
Baltimore
MASSACHUSETTS
Boston
MICHIGAN
Detroit
Grand Rapids
Kalamazoo
MINNESOTA
Minneapolis
St. Paul
MISSISSIPPI
Jackson
MISSOURI
Kansas City
St. Louis
MONTANA
Billings
NEBRASKA
Omaha
NEW JERSEY
Hackensack
NEW MEXICO
Albuquerque
NEW YORK
Buffalo
New York
Rochester
Syracuse
NO. CAROLINA
Charlotte
Raleigh
Winston Salem
OHIO
Cincinnati
Cleveland
Toledo
OKLAHOMA
Oklahoma City
Tulsa
OREGON
Portland
PENNSYLVANIA
Philadelphia
Pittsburgh
SO. CAROLINA
Greenville
TENNESSEE
Kingsport
Knoxville
Memphis
Nashville
TEXAS
Dallas
El Paso
Fort Worth
Houston
San Antonio
UTAH
Ogden
Salt Lake City
VIRGINIA
Norfolk
Richmond
Roanoke
WASHINGTON
Seattle
Spokane
WEST VIRGINIA
Charleston
Huntington
WISCONSIN
La Crosse
Milwaukee

CANADA Toronto, Ontario-Montreal, Quebec-Vancouver, British Columbia-Winnipeg, Manitoba-Saskatoon, Saskatchewan-Regina, Saskatchewan

TABLE OF CONTENTS

	Page
How to Order/Conditions of Sale	2
Introduction/Distributors	3
Table of Contents	4
Pressure Regulators — Internal Pilot	5
Types AA and AR (Steam-Air)	6-7
Pressure Regulators	
Type 700 (Liquid-Air)	8
Type 701 (Water)	9
Pressure Reducing Valves	
Type 10	12
Type 11-A	13
Type D	14
Diaphragm Regulating Valves — Double Seated	
Types 114 and 114R	10
Types 116 and 116R	10
Diaphragm Regulating Valves — Single Seated	
Types 119 and 119R	11
Types 118 and 118R	11
Back Pressure Valves	
Types 135 and 145	18
Types 135/145 Capacity Tables	19
Bronze Safety and Relief Valves	
Types 40 and 41 (Steam or Air) ASME	20
Types 42, 43 and 44 (Liquids)	20
Capacities	21
Iron and Steel Safety Valves	
Type 301 ASME	22
Types 401 and 402 ASME	22
Capacities and Dimensions	23
Drip Pan Elbows	15
Regulator Water Capacity Table	15
Regulator Steam Capacity Table	16
Regulator Air Capacity Table	17

Request Float and Lever Valve Bulletin No. 8711-7

Request Strainer Section

TYPE AA, AR
REGULATING VALVES

Renewable Parts

Identification of Internal working parts:

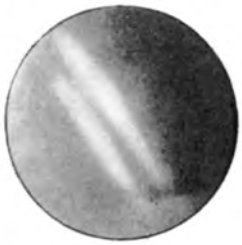

DIAPHRAGM No. 11

MAIN VALVE No. 26

MAIN VALVE SPRING No. 27

PISTON WITH RING No. 21

TYPE AA

CROSS SECTION OF TYPE AA AND IA REGULATING VALVE SHOWING RELATION OF COMPONENT PARTS. NOTE ACCESSIBILITY TO EVERY PIECE OF VALVE CONSTRUCTION. SIZES ½" TO 6" SCREWED OR FLANGED.

Tested and Approved - U.S. Navy for design - materials - workmanship and operation.

CYLINDER LINER No. 23

UNIT PILOT VALVE No. 12

ADJUSTING SPRING No. 8

MAIN VALVE SEAT No. 25

TYPE AA, AR PRESSURE REGULATORS

Bronze Body
Steam — Stainless Steel Trim (Max. 300 psi Inlet)
Air — Nylon Trim (Max. 600 psi Inlet)
Internal Unit Pilot Valve

The Keckley Precision Pressure Regulator has for its greatest advantages simplicity in design, unit pilot valve construction, and the use of stainless steel for parts subject to the most wear, which can be renewed at a nominal cost.

The main valve seat of stainless steel is inserted from the bottom of the body. The piston above the valve, where dirt and sediment will not affect its operation, rides in a cylinder liner which can be easily replaced. The pilot valve cage is screwed into the top cap as a complete unit, with valve and spring. Directly above the pilot valve is the diaphragm held down by the adjusting spring case.

The main valve is opened by high pressure acting on the large piston directly above it. The pilot valve, working in conjunction with the diaphragm, actuated by any unbalanced effect of the adjusting spring and low pressure beneath it, controls accurately the necessary pressure to the piston. Thus the pilot valve, extremely sensitive to the secondary pressure, opens and closes the main valve in a proportionate degree to maintain the desired constant low pressure at all times.

Sudden fluctuations in initial pressure are prevented from reaching the secondary side by the expansion chamber effect of the piston cylinder.

The Keckley Regulator is made of the finest materials with precision workmanship and is thoroughly tested under all operating conditions. This regulator, therefore, offers maximum efficiency not only as to close regulation but also as to dependability through years of service.

Type AA for reduced steam or air pressure above 40 psi: Type AA Regulators are recommended for reduction of pressures from the maximum pressure in one step to pressure above 40 psi. For pressures below 40 psi, we recommend the Type AR Precision Pressure Regulator as described below. It is necessary to have a minimum difference of 15 psi between initial pressure and reduced pressure for proper valve operation.

Type AR for reduced pressures from 2 to 40 psi: For reduction of pressure to 40 psi or less, the top cap of the regulator is furnished with larger diaphragm and provided with remote control connection, and is designated as Type AR. Remote control connection should be installed in the line to be controlled on the reduced pressure side of the regulator.

Operation: Remove all tension from the adjusting spring by turning handwheel to the left, which closes pilot valve and main valve of the regulator. Then open wide the stop valve on the high pressure side of the line. Increase tension slowly on the adjusting spring by turning handwheel to the right until the desired low pressure is reached, after which the stop valve in the low pressure side can be opened. When the regulator is in operation. keep both stop valves fully open and locknut on adjusting screw tight.

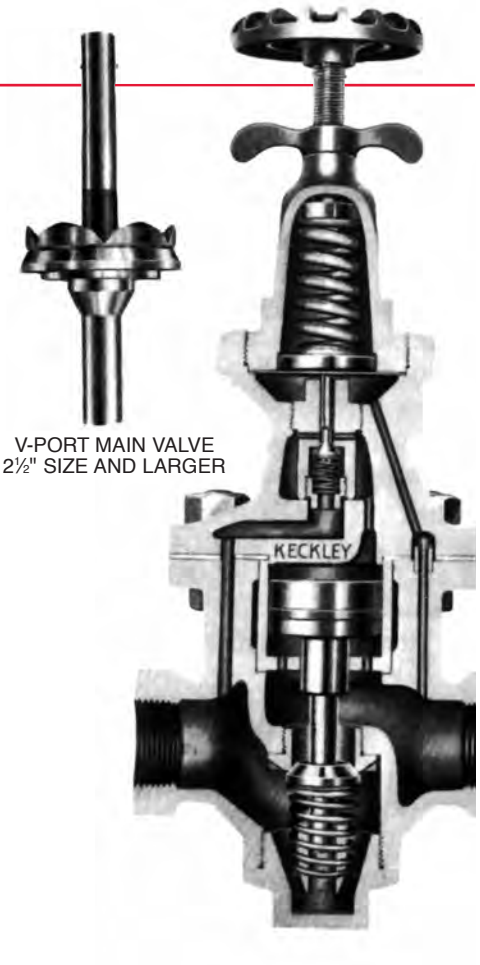

V-PORT MAIN VALVE
2½" SIZE AND LARGER

TYPE AA REGULATING VALVE
SIZES 2½" TO 6"
SCREWED OR FLANGED

The Keckley Precision Pressure Regulator can be adjusted to any desired pressure within the range of the regulating spring and diaphragm by merely turning the handwheel at the top of the regulator to the right for higher secondary pressure, and to the left for lower secondary pressure.

See pages 16-17 for recommended sizes at various capacities.

TYPE	Size	INLET PRESSURE RANGE Steam	REDUCED PRESSURE RANGE Minimum	REDUCED PRESSURE RANGE Maximum	Approx. Variation in Reduced Pressure Setting
Type AA	½"–2½"	55–300 psi	40 psi	285 psi	3% of inlet Press. over 100 psi
	3"–6"	55–300 psi	40 psi	285 psi	5% of inlet Press. over 100 psi
Type AR	½"–2½"	25–300 psi	2 psi	40 psi	2% of inlet Press. over 100 psi
	3"–6"	25–300 psi	5 psi	40 psi	5% of inlet Press. over 100 psi

For Air service with nylon trim to 600# inlet, same Minimum Reduced Pressure % factors apply. Must have at least 25 psi initial pressure.

	INLET PRESSURE RANGE Air	REDUCED PRESSURE RANGE Air
Type AA	60–600 psi	40–585 psi
Type AR	25–600 psi	2–40 psi

Must have at least 25 psi initial pressure.

KECKLEY COMPANY • 3400 Cleveland Street • P.O. Box 67 • Skokie, Illinois 60076

TYPE AA, AR PRESSURE REGULATORS

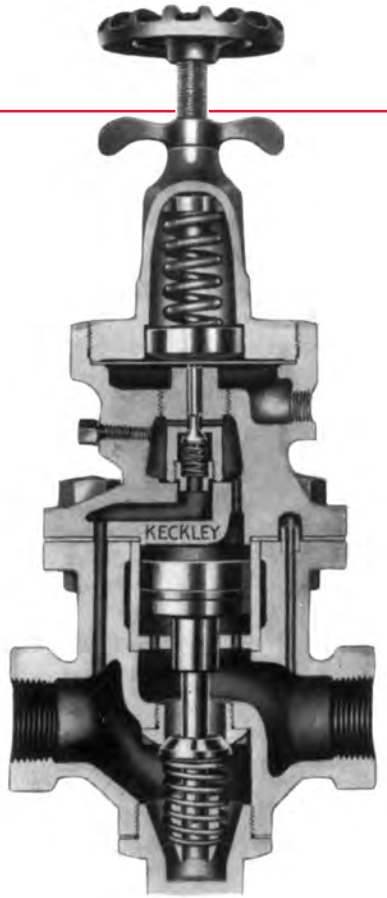

TYPE AR REGULATING VALVE
SIZES ½" TO 6"
SCREWED OR FLANGED

Specifications:

BODY CASTINGS: Bronze.

MAIN VALVE: Stainless steel, accurately machined, ground and polished.

MAIN VALVE SEAT: Stainless steel with seat ground and polished. Screwed into body. Readily removable and renewable.

DIAPHRAGM: Phosphor bronze rolled to accurate thickness.

SPRINGS: Stainless steel, impervious to tension changes due to temperature variations. Accurately wound. Ends ground square.

PISTON: Government bronze, accurately machined and readily removable. Carries piston ring of high resiliency and sealing characteristics.

PISTON CYLINDER: Renewable cylinder liner with integral head of government bronze or stainless steel.

GASKETS: Non asbestos (copper jacketed), both under main valve cap and between body and body cap offer maximum resistance to leakage.

PILOT VALVE: The pilot valve, spring and cage is of course the "HEART OF THE REGULATING VALVE." For this reason we have designed this portion of the Keckley Regulating Valve so that it is removable as a unit. Compare this unit construction with other types where the various component parts of the pilot valve must be removed individually. Valve and cage are stainless steel, accurately ground and polished.

NYLON is used for both the pilot valve and main valve, guaranteeing positive shut-off on air service.

STELLITED SEAT RINGS for the main valve and main valve seat can be furnished for extreme operating conditions where high pressure and temperature is a major factor.

Capacity table, see pages 16-17.

DATA REQUIRED WHEN ORDERING:

Inlet Pressure
Outlet Pressure
Media
Capacity

UNIT PILOT VALVE OF TYPE AA AND AR REGULATORS

DIMENSIONS • BRONZE—300# • 150# AND 300# ASA FLANGES (approximate)

Size	Face to Face: Screwed	Face to Face: Flanged 150#	Face to Face: Flanged 300#	Center to Bottom	Center to Top	Total Height	Diam. of Flanges	Thick. of Flanges	Bolt Circle	No of Bolts	Size of Bolts	Diam. of Bolt Hole	Ship Weight: Screwed	Ship Weight: Flanged 150#	Ship Weight: Flanged 300#
½	5¾	6¼	6⅝	2 11/16	11 9/16	13⅞	3¾	½	2⅝	4	½	⅝	22	28	29
¾	5¾	6 5/16	6 11/16	2 11/16	11 9/16	13⅞	4⅝	17/32	3¼	4	⅝	¾	22	28	29
1	5¾	6⅜	6 13/16	2 11/16	11 9/16	13⅞	4⅞	19/32	3½	4	⅝	¾	22	28	29
1¼	6	6 11/16	7⅛	2⅞	11½	14⅜	5¼	⅝	3⅞	4	⅝	¾	23	30	32
1½	6¼	7 7/16	7⅞	3 3/16	11¾	14 15/16	6⅛	11/16	4½	4	¾	⅞	27	37	39
2	7½	8½	9	3½	12 1/16	15 9/16	6½	¾	5	8	⅝	¾	42	51	54
2½	—	9½	10	4⅝	13⅛	17¾	7½	13/16	5⅞	8	¾	⅞	—	72	75
3	—	10¾	11 5/16	5 11/16	13⅝	19 5/16	8¼	29/32	6⅝	8	¾	⅞	—	112	115
4	—	12 7/16	13 3/16	7⅛	15 9/16	22 11/16	10	1 1/16	7⅞	8	¾	⅞	—	218	221
5	—	13⅝	14⅜	9 5/16	16⅞	26 3/16	11	1⅛	9¼	8	¾	⅞	—	295	300
6	—	15⅛	15⅞	9 13/16	18 9/16	28⅜	12½	1 3/16	10⅝	12	¾	⅞	—	395	400

TYPE 700
WATER PRESSURE REGULATOR

Spring Diaphragm Type
Adjustable Spring Range 8-30; 28-50; 45-75; 70-100

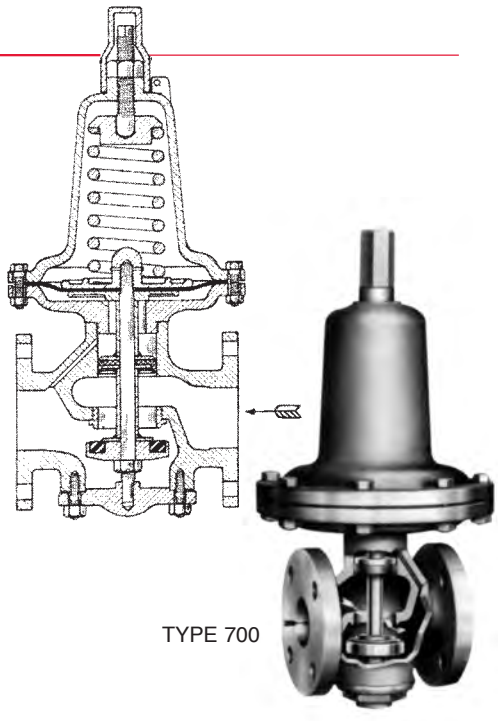

TYPE 700

Service: **The Type 700** is an improved design of the best type of water pressure reducing valve in small sizes for silent, dead end operation, especially for supplying low or medium water pressure to buildings from high pressure city water mains. Because they are dependable, tight closing, compact, and rarely require attention they are in use for fresh and salt water systems on many naval and merchant ships. No. 700 valves are made for initial pressures up to 300 psi. The delivery pressures are sufficiently high for ordinary service water uses but limited only to insure long diaphragm life, good regulation and to avoid damage to plumbing fixtures.

Construction: In the design of these valves special attention has been given to provide large flow passages; rugged construction for durability and to assure perfect alignment and free operation under pipe strains; accessibility for replacement of the rubber disc, diaphragm, or leather cup without removing from the line; and a better spring design for constant pressure over a wide range of capacity.

Standard valves have bronze bodies and cast iron spring chambers in size 1½ inches and smaller, cast iron bodies and spring chambers in the larger sizes, with bronze trim in all sizes. **For marine service, the bodies and spring chambers are usually furnished in all bronze material at extra cost.**

Operation: The inlet water pressure acts upward on the piston (sealed by a leather cup) and downward on the disc holder carrying a rubber ring disc. The inner valve is consequently balanced and unaffected by changes in inlet pressure.

The valve is held open by the spring until the delivery pressure, transmitted through the diagonal drilled hole to the space under the diaphragm, is sufficient to lift the diaphragm and pull the valve closed.

Water capacity table page 15.

INITIAL PRESSURE AND TEMPERATURE LIMITS

Body: Bronze or Cast Iron, Scrd.
Air-Water: 300 psi 150˚F.
Not used for steam

Body: Cast Iron, 125 lb. Flanges
Air-Water: 200 psi 150˚F.
Not used for steam

Body: Cast Iron, 250 lb. Flanges
Air-Water: 300 psi 150˚F.
Not used for steam

Higher Temperatures-Consult Factory

Reduced Pressures
Different springs required to cover this range each adjustable over part of range. Spring ranges –8 to 30; 28 to 50; 45 to 75; 70 to 100.

DIMENSIONS—WEIGHTS (approximate)

	DIMENSION—INCHES						SHIPPING WEIGHTS		
	Face to Face								
	Screwed	Flanged 125#	Flanged 250#	Center Line to Top	Center Line to Bottom	Diameter Diaphragm Chamber	Screwed	Flanged 125#	Flanged 250#
½-¾	3¾	—	—	9⅝	1⅞	5	16	—	—
1	4¼	—	—	10 3/16	2⅜	6	20	—	—
1¼	4½	—	—	13 7/16	2 11/16	8	30	—	—
1½	5¼	—	—	14⅛	2⅞	8	40	—	—
2	8⅞	7½	8	14¾	3½	8	55	60	65
2½	9½	9½	10⅛	18⅜	4⅞	9⅛	140	150	155
3	11½	10½	11¼	24	6	12	210	225	240
4	—	11¼	11⅞	24 11/16	6½	12	—	270	290

KECKLEY COMPANY • 3400 Cleveland Street • P.O. Box 67 • Skokie, Illinois 60076

TYPE 701
WATER PRESSURE REGULATOR

External Pilot Type
Adjustable Spring Range 8-30; 28-50; 45-75; 70-100

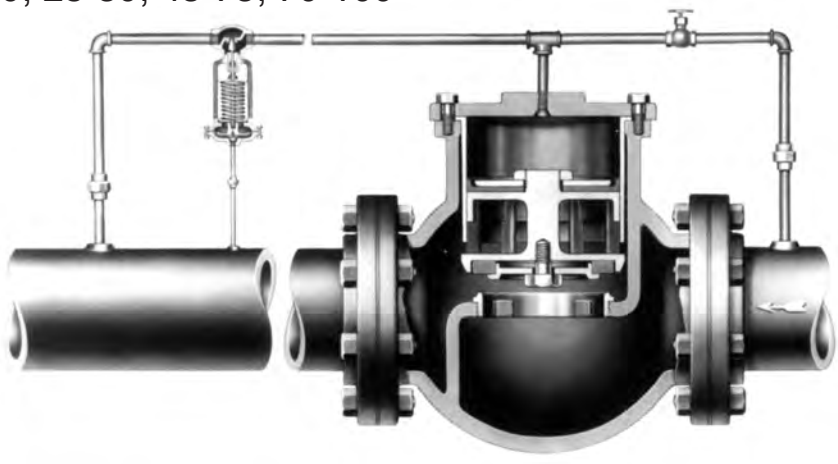

Service: The Type 701 water reducing valve is intended for use wherever water at a higher pressure is to be reduced to a pressure between 8 and 100 p.s.i. and where a tight closing valve of heavy and durable construction is needed. Typical applications are on the discharge of pumps supplying water for general plant use and for regulating pressure on plumbing systems.

Materials: The valve body and cover are cast iron. The internal parts are bronze except the rubber disc and leather cup. Sizes 2, 2½ and 3 inch have screwed or flanged ends. Larger sizes made with flanged ends only.

Construction: The inner valve carries a rubber composition disc which closes against a renewable seat bushing. The upper part of the inner valve is a piston, fitted with a leather cup and sliding in a cylinder. The piston has a larger area than the seat bore. The pilot valve is a ½" **No. 100 diaphragm control valve** with needle point main valve.

Operation: When the reduced pressure is below normal, a small amount of water flows continuously through the restricting needle valve and pilot valve into the low pressure pipe. As the water pressure transmitted through the tee to the top of the piston is considerably lower than the inlet pressure under the disc, the inner valve is held open. When the reduced pressure under the diaphragm of the pilot valve exceeds normal, the pilot valve begins to close, causing the pressure above the main valve piston to increase and force the inner valve toward the seat until normal reduced pressure is restored.

Adjustment: The reduced pressure can be adjusted to the desired valve by means of the pilot valve spring. The restricting valve is used to control the speed of operation of the main valve. When this needle valve is nearly closed the reduced pressure is kept within closer limits and the main valve opens quickly but closes slowly.

INITIAL PRESSURE AND TEMPERATURE LIMITS

Body: Cast Iron, Screwed
Water: 250 psi 125˚F.
Not used for air or steam

Body: Cast Iron, 125 lb. Flanges
Water: 200 psi 125˚F.
Not used for air or steam

Body: Cast Iron, 250 lb. Flanges
Water: 250 psi 125˚F.
Not used for air or steam

Higher Temperatures-Consult Factory

Reduced Pressures
Different springs required to cover this range each adjustable over part of range. Spring ranges –8 to 30; 28 to 50; 45 to 75; 70 to 100.

Water capacity table page 15.

DIMENSIONS—WEIGHTS (approximate)

Size Inches	Dimensions Globe—F. to F.—Inches: Screwed	Flanged 125#	Flanged 250#	Dimensions Angle—Cen. to Flg.—Inches: Screwed	Flanged 125#	Flanged 250#	Shipping Weight: Screwed	Flanged 125#	Flanged 250#
2	7 9/16	8¼	8¾	3 7/16	4⅛	4⅜	43	52	60
2½	8¾	9½	10⅛	3 15/16	4¾	5 1/16	53	65	72
3	9¾	10½	11¼	4½	5¼	5⅝	73	85	100
4	—	12¼	12⅞	—	6⅛	6 7/16	—	120	140
5	—	14½	15⅝	—	7¼	7 11/16	—	170	195
6	—	16¼	17⅛	—	8⅛	8 9/16	—	200	235
8	—	19⅛	20⅛	—	9⅛	9⅝	—	395	445
*10	—	20⅛	21½	—	—	—	—	465	520

*Globe pattern only

KECKLEY

TYPES 114 • 114R – DOUBLE SEATED • SPRING LOADED
TYPES 116 • 116R – DOUBLE SEATED • WEIGHT LOADED
DIAPHRAGM REGULATING VALVES

Reducing Valve (Normally Open) Pressure to Diaphragm to Close • Relief Valve (Normally Closed) Pressure to Diaphragm to Open • Steam, Air, Gas, Water, Oil Service 300 lb. Bronze Body • 250 lb. Cast Iron Body

On self contained Regulators for reduced pressures above 60 psi a piston operator is necessary and replaces the diaphragm operator at additional cost.

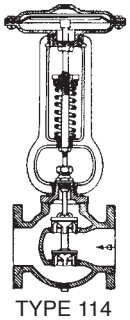

TYPE 114

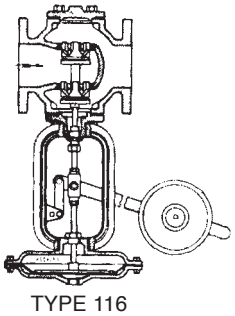

TYPE 116

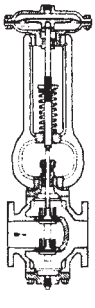

TYPE 114-R

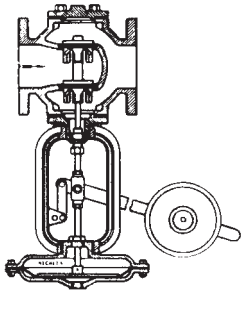

TYPE 116-R

Type 114 • Type 116: Spring-loading distinguishes the 114 Regulator. Weight-loading distinguishes the 116 Regulator. They are direct connected, diaphragm actuated. A regulator of this design will maintain a given constant pressure reduction under continuous service conditions. The balanced inner valve is unaffected by high pressure fluctuations. When the spring or weight is set for the desired reduced pressure, the regulator will automatically deliver the amount of steam required for any specific operating condition.

This regulator is ideal for heating and gas distributing systems or any service requiring direct operated pressure reduction of Steam, Air, Gas, Water and Oil.

Valves, sizes 1½, and smaller, are usually furnished with bronze bodies and bronze trim. Larger valves have cast iron bodies with bronze trim.

Diaphragm heads are interchangeable and may be had in a number of sizes suitable for various reduced pressure ranges. (6", 7", 8", 10", 13".)

Installation may be made in a horizontal pipe line with the diaphragm either above or below the line or in a vertical line with the stem located in a horizontal plane.

Control pressure is piped to the diaphragm chamber from the reduced pressure line about ten feet ahead of the regulator where an equalized pressure is maintained. The control pressure line should be so located as to form a condensate trap to seal the diaphragm and protect it from the heat of the steam.

A needle valve installed in this line will cushion the action of the main valve. Weight loaded regulators must be installed with diaphragm below a horizontal pipe line.

Type 114-R • Type 116-R double seated relief valve • Reverse acting: With the exception of a reversed disc, the 114-R and 116-R double seated Relief Valves are of the same general construction as the 114 and 116 Regulator with the same dimensions in all pipe sizes.

The disc is held to its seat by the spring or weight loading and is opened by the pressure to be relieved acting on the diaphragm through pilot piping to the inlet line.

The 114-R and 116-R are best applied in relieving from one pressure line into a lower pressure line as variations in either the inlet or outlet pressure have no effect on its operation because of the balanced disc construction.

Steam and air capacity tables, see pages 16-17. Water capacity table, see page 15.

DIMENSIONS (approximate) • TYPE 114 • 114-R 116 • 116-R • 118 • 118-R • 119 • 119-R

Size	½	¾	1	1¼	1½	2	2½	3	4	5	6	8	10	12
Face to Face Screwed	4 11/16	4 11/16	4 11/16	5¾	5¾	6½	7⅞	9¼	—	—	—	—	—	—
Face to Face Std. Flanged	—	—	—	—	—	6½	8 5/16	9¼	10¾	12	13	16¾	20¼	22⅝
Face to Face Ex. Hvy. Flanged	—	—	—	—	—	7	8 13/16	10	11⅜	12⅞	13⅞	17¾	21⅝	24½

KECKLEY COMPANY • 3400 Cleveland Street • P.O. Box 67 • Skokie, Illinois 60076

TYPES 119 • 119R – SINGLE SEATED • SPRING LOADED
TYPES 118 • 118R – SINGLE SEATED • WEIGHT LOADED
DIAPHRAGM REGULATING VALVES

Reducing Valve (Normally Open) Pressure to Diaphragm to Close • Relief Valve (Normally Closed) Pressure to Diaphragm to Open • Steam, Air, Gas, Water, Oil Service 300 lb. Bronze Body • 250 lb. Cast Iron Body

Type 119 • Type 118: This single seated direct connected diaphragm type of regulator is recommended for dead end service where it is required that the valve close tight and maintain a reduction regardless of flow.

The port area is about one-half the pipe area so it is not a suitable type to use where maximum high pressure pipe capacity is required.

The initial pressure is under the disc. Control pressure on the diaphragm must overbalance initial pressure under the disc. The greater the difference between initial and reduced pressures, the larger the diaphragm must be.

Approximate initial and reduced pressures must be known in order to construct a regulator of this type for a given operating condition.

Valves, sizes 1½" and smaller, are usually furnished with bronze bodies and bronze trim. Larger valves have cast iron bodies with bronze trim.

The yoke which joins the valve body and the diaphragm chamber is held in place by set screws. **Recommended installation in order to obtain water accumulation to protect the diaphragm would be to have the valve inverted with the yoke and diaphragm chamber below the line of flow.** Diaphragm heads are interchangeable and are available for most pressure conditions in sizes 6", 7", 8", 10", 13".

Installation: See page 10.

Type 119-R • Type • 118-R single seated relief valves • Reverse acting: The Single Seated 119-R and 118-R are identical to the 119 and 118 valve except reverse seated.

The 119-R and 118-R gives accurate relief where the pressure on the discharge is constant such as when relieving to the atmosphere. It is tight on shut-off but the pressure setting is affected by both inlet and outlet pressure variations.

The disc is held to the seat by spring or weight loading (normally closed). The pilot line senses the increase in up-stream pressure and signals the diaphragm to open the main valve.

Steam and air capacity tables. see pages 16-17. Water capacity table, see page 15.

On self contained regulators for reduced pressures above 60 psi, a piston operator is necessary and replaces the diaphragm operator at additional cost.

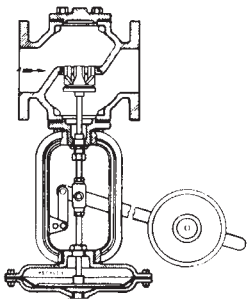

TYPE 118

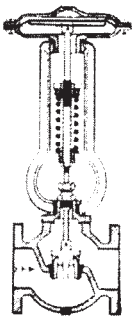

TYPE 119

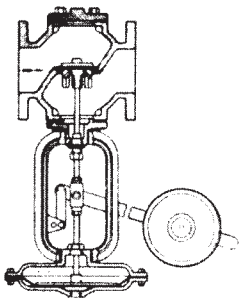

TYPE 118-R

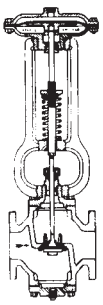

TYPE 119-R

SHIPPING WEIGHT • TYPE 114 • 114-R • 116 • 116-R • 118 • 118-R • 119 • 119-R

Size	½	¾	1	1¼	1½	2	2½	3	4	5	6	8	10	12
Screwed	31	31	33	36	40	90	100	130	—	—	—	—	—	—
Standard Flanged	—	—	—	—	—	95	110	140	170	235	285	450	600	925
Extra Heavy Flanged	—	—	—	—	—	100	120	150	185	245	290	500	650	1000

TYPE 10
PRESSURE REDUCING VALVE

Bronze Body and Trim
Single Seat —Tight Closing
Spring Range 5 to 30; 15 to 100
Water, Oil, Air Service

Maximum allowable pressure on plumbing fixtures is generally about 40 pounds. When the supply is from high pressure mains, or that may, in case of fire, be under high pressures temporarily, it is necessary to use pressure reducing valves to protect the fixtures and insure satisfactory operation. In industrial plants, water regulators frequently are required for processing and other specific purposes.

While the Type 10 Regulator is widely used for water pressure reduction, it is equally well adapted for the reduction of air if the operating pressure conditions are within its limitations. **Maximum initial pressure 150 psi. Minimum reduced pressure 5 psi.**

Construction/Operation: The valve body and trim are bronze and the spring case is cast iron. It is equipped with a standard renewable composition disc and has a neoprene diaphragm.

Removal of the bottom cap exposes the disc for inspection or replacement. The disc is mounted on a plate guide that slips into the pusher yoke. The assembly may be easily removed by hand. Complete inspection or replacement of any part can be made without removal of the valve body from the pipe line.

Port area is full pipe area. Normally the valve is forced open by the compression spring. Flow enters over the disc and comes in contact with the diaphragm as it passes to the outlet. When the outlet pressure on the diaphragm overcomes the spring, the valve closes against the inlet pressure.

For water pressure reducing valve, pipe sizes larger than 1", see Type 700, page 8.

TYPE 10

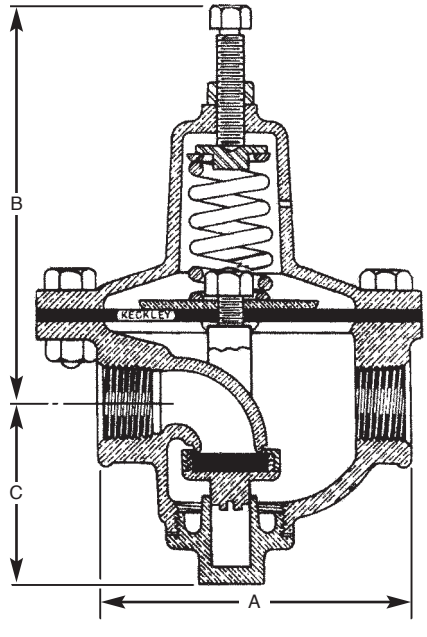

DIMENSIONS—WEIGHTS (approximate)

Bronze Body Maximum Working Pressure 150 lbs.		Bronze Body Screwed Ends		
SIZE Inches	A	C	B	Shipping Weight
½	4¼	2⅜	5⅞	9
¾	4¼	2½	5⅞	9
1	4¼	2½	5⅞	9

MAXIMUM CAPACITIES • CUBIC FEET OF AIR PER MINUTE

Inlet Pressure	Outlet Pressure	VALVE SIZES ¼	½	¾	1
25	10	4.4	17.5	39	70
50	8-30	7.3	29	65	115
75	8-45	10.0	40	90	160
75	55	8.3	33	75	135
100	8-55	12.5	50	110	200
150	8-60	18.8	75	170	300

MAXIMUM CAPACITIES • GALLONS OF WATER PER MINUTE

Inlet Pressure	Outlet Pressure	VALVE SIZES ¼	½	¾	1	Inlet Pressure	Outlet Pressure	VALVE SIZES ¼	½	¾	1
25	10	.9	3.5	7.9	14	75	40	1.4	5.5	12.4	22
25	15	.7	3.0	6.7	12	75	60	.9	3.5	7.9	14
25	20	.5	2.0	4.5	8	100	10	2.2	8.7	19.7	35
50	10	1.4	5.7	12.9	23	100	30	1.9	7.5	16.9	30
50	20	1.2	5.0	11.2	20	100	50	1.6	6.5	14.6	26
50	30	1.0	4.0	9.0	16	150	20	2.7	10.7	24	43
50	40	.7	3.0	6.7	12	150	40	2.4	9.5	21	38
75	10	1.8	7.2	16.3	29	150	60	2.2	8.7	19.7	35
75	20	1.7	6.7	15.2	27	—	—	—	—	—	—

DATA REQUIRED WHEN ORDERING:

1. Size
2. Media
3. Inlet pressure
4. Outlet pressure
5. Capacity

KECKLEY COMPANY • 3400 Cleveland Street • P.O. Box 67 • Skokie, Illinois 60076

TYPE 11A
PRESSURE REDUCING VALVE

250 lbs. Cast Iron Body
Single Seat —Tight Closing
Steam, Air, Water, Oil Service

Service: The KECKLEY 11A Pressure Reducing Valve is full ported, tight closing with a composition disc, easily changed or renewed. It will maintain a constant reduced pressure on a multitude of general industrial applications where capacity and compactness are desired. It is recommended on applications with "dirty" steam.

Operation: Reduced pressure under the diaphragm balances the spring loading and positions the disc. Changes in reduced pressure opens or closes the valve tending to keep the reduced pressure constant. Adjustment for reduced pressure is accomplished by compressing the diaphragm spring. See chart for reduced pressure ranges obtained per spring and valve size.

Construction: The Type 11A, sizes ⅜" to 2" has a 250 lb. cast iron body. Available trim is bronze or stainless steel. **For steam service, the valve is supplied with phosphor bronze diaphragm and teflon valve disc. For air or liquid service, the valve is standard with a rubber diaphragm and neoprene valve disc.**

The spring case is of one piece construction with a hex shaped flange using 6 bolts providing easy removal and maximum safety.

REDUCED PRESSURE ADJUSTING SPRINGS

Valve Size	#1Spring	#2 Spring	#3 Spring
⅜"-½"	5-25 lb.	25-50lb.	50-100 lb.
¾"-1"	5-20 lb.	20-45 lb.	45-75 lb.
1¼"-1½"	5-15 lb.	15-40 lb.	30-60 lb.
2"	5-15 lb.	15-30 lb.	30-50 lb.

DATA REQUIRED WHEN ORDERING

Size
Trim (bronze or stainless steel)
Media
Inlet pressure
Outlet pressure
Capacity

Steam and air capacity tables, see pages 16-17. Water capacity table, see page 15 .

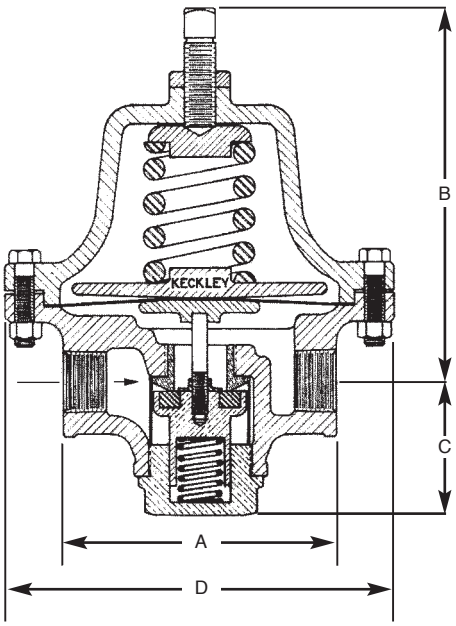

SINGLE SEAT—TIGHT CLOSING
SELF CONTAINED—TYPE 11-A

DIMENSIONS—WEIGHTS (approximate)

Size	⅜"-½"	¾"	1"	1¼"	1½"	2"
A	4¼	5⅝	5⅝	6⅝	6⅝	7¾
D	6	8	8	9	9	9
B	6⅝	8⅝	8⅝	9⅜	9⅜	9⅜
C	2⅛	2¾	2¾	2¾	2¾	3 1/16
Port Area	⅝	1	1	1½	1½	2
Shipping Weight	12	28	28	28	38	60

TYPE D
PRESSURE REDUCING VALVE

200 lb. Bronze Body, Stainless Steel Trim
Single Seat — Tight Closing
Spring Range 5 to 30; 15 to 100
Steam, Air Service

TYPE D

This pressure reducing regulator is a direct-acting spring-loaded valve, designed with a large diaphragm, and effective working area to secure sensitive control and more accurate regulation of reduced pressure, and is recommended for small systems where a tight closing valve is required to prevent the pressure on the system from building up.

Construction: These regulators are made with bronze body and stainless steel valve, seat and spring.

A metal diaphragm is used for steam service. A rubber diaphragm with fabric insert is used for air service.

The advantage of this regulator is that it is compact and light in weight, simply constructed, easily adjusted, economical and accurate for small systems where a tight closing valve is required.

Operation: This regulator is normally held open by the spring tension, and the steam or air enters diaphragm chamber through the port on delivery side of valve, the pressure under the diaphragm forcing the diaphragm upward against tension of spring, causing main valve to close, forming a balance between the delivery pressure and the tension of the adjusting spring.

The reverse or indirect action is very simple and has few moving parts. Adjustment is easily made with common tools. Turning the adjusting screw into the top cap increases the reduced pressure. Capacity of this valve is approximately one-third the pipe line of any given size. The Type D Valve is a high quality valve and can be recommended for light exacting service.

Applications: Controlling steam pressure to stills, kettles, sterilizers, presses, washers and many others for both air and steam.

DATA REQUIRED WHEN ORDERING:
Inlet pressure
Outlet pressure
Media
Capacity

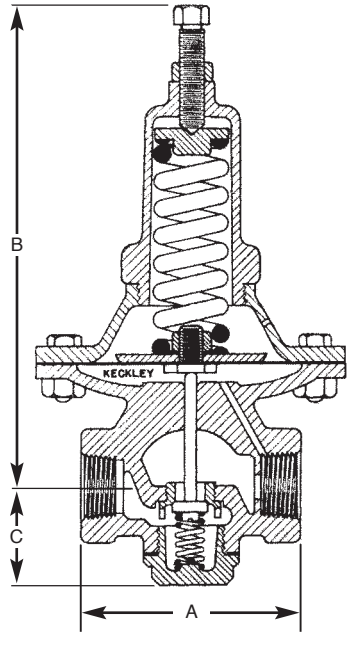

DIMENSIONS—WEIGHTS (approximate)

BRONZE BODY Screwed Ends

SIZE	A Inches	B Inches	C Inches	Shipping Weight
¼	3⅝	8 5/16	1⅝	9
⅜	3⅝	8 5/16	1⅝	9
½	3⅝	8 5/16	1⅝	9
¾-1	3⅝	8 5/16	1⅝	9

MAXIMUM CAPACITIES

Inlet Pressure	Outlet Pressure	Pounds of Saturated Steam Per Hour — VALVE SIZE ¼	⅜	½	¾-1
25	5 to 15	6.7	15	27	60
50	5 to 30	10.8	24	43	97
75	5 to 45	15	34	60	135
75	55	12.5	28	50	110
100	5 to 55	19.7	44	79	180
100	80	14.8	33	59	135
150	5 to 80	28	63	110	250
150	100	26	58	100	130
200	5 to 105	36	81	145	320

Inlet Pressure	Outlet Pressure	Cubic Feet of Air Per Minute — VALVE SIZE ¼	⅜	½	¾-1
25	5 to 15	2.7	6.2	10.9	25
50	5 to 30	4.5	10.2	18.2	41
75	5 to 45	6.2	14.1	25	56
75	55	5.2	11.7	21	47
100	5 to 55	7.8	17.6	31	70
100	80	6.2	14.1	25	56
150	5 to 80	11.7	26	47	105
200	5 to 105	15.0	34	60	135
—	—	—	—	—	—

KECKLEY COMPANY • 3400 Cleveland Street • P.O. Box 67 • Skokie, Illinois 60076

DRIP PAN ELBOWS

Cast Iron Drip Pan Elbows for steam service. Installation for power boilers and unfiredpressure vessel service.

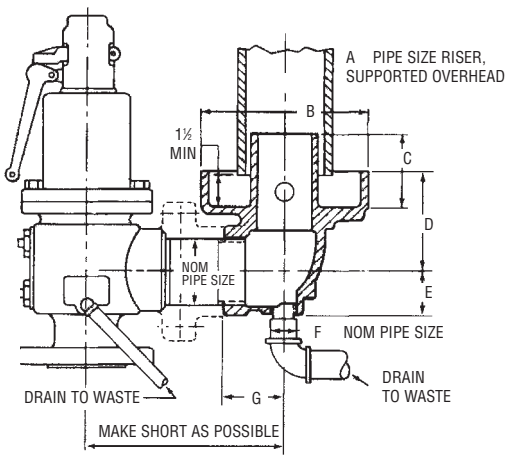

DIMENSIONS

Size	A	B	C	D	E	F	G	Wt. Lbs.
¾-1"	1½	3¾	1¾	2¾	1 1/32	¼	1½	2
1¼-1½"	2½	5½	2 15/32	4⅛	1 7/16	⅜	2⅛	5
2"	3	6¼	2⅜	3⅝	1⅝	½	2¼	7
2½"	3½/4	7⅜	3	4 5/16	1 15/16	¾	2 11/16	11
3"	4	8	3½	4⅞	2 5/16	¾	3⅛	19
4"	6	9⅝	4½	5¾	2⅞	¾	3¾	27
6"	8	12¾	6⅝	7 9/16	4 3/16	¾	8	80
8"	10	16½	7½	9 9/16	5⅝	1	10¾	150
10"	FABRICATED STEEL—CONSULT FACTORY							

6" and 8" elbows have integral 125 lb. ANSI flange.

CAPACITIES OF CONTROL VALVES FOR WATER

Water Capacity Table
Gallons Per Minute

PRESSURE DROP—pounds per square inch

VALVE SIZES	1	5	10	20	30	40	50	60	80	100	125	150
½	2.7	6	9.1	13	16	19	21	25	27	31	34	39
¾	5.4	13	19	26	32	39	42	50	58	63	70	80
1	8	18	27	38	48	58	62	73	81	90	100	120
1¼	13	30	48	62	79	92	100	120	140	150	160	180
1½	22	48	73	99	120	150	160	190	220	240	270	300
2	30	67	100	140	170	210	230	270	300	350	380	420
2½	44	95	150	200	250	300	350	390	440	500	550	620
3	68	140	230	300	370	450	500	590	650	720	800	900
4	180	400	600	800	1000	1300	1400	1600	1800	2000	2400	2500
6	360	790	1200	1700	2100	2500	2700	3200	3600	4100	4800	5000
8	740	1700	2600	3500	4400	5400	5900	6900	7700	8800	9800	12000

PRESSURE DROP IS DIFFERENCE BETWEEN INLET PRESSURE AND REDUCED PRESSURE.

MULTIPLIERS TO BE USED

VALVE NO.	⅜	½	¾	1	1¼	1½	2	2½	3	4	5	6	8	10
700		.40	.40	.40	.35	.35	.54	.44	.54	.35				
701							1.60	1.30	1.30	.90	1.00	1.00	.90	1.00
114-114R-116-116R		*	*	*	*	*	*	*	*	*	*	*	*	*
118-118R-119-119R		.55	.55	.55	.55	.55	.55	.55	.55	.55	.55	.55	.55	.55
11A	.60	.60	.40	.60	.40	.40	.30							

*USE TABLE AS SHOWN

CAPACITIES OF PRESSURE REGULATORS FOR STEAM

The capacity table has been prepared to simplify the selection of the proper size regulator for steam service.

It is based on the differences in pressure across the valve seat or inlet side of valve versus outlet side. Pressure reductions of a magnitude greater than those shown do not materially increase the quality of steam that will flow through the valve and have not, therefore, been listed.

If the exact pressures desired are not shown, the capacity may be found by interpolation. This table is not intended for use in sizing pipe lines, but only for determining the proper size of regulating valve, as it is often the case that full pipe size regulators are not required. Rated capacities do not increase for lower reduced pressures than shown for each inlet pressure.

Note corrections for superheated steam and multiplier for specific valve types at bottom of page.

SATURATED STEAM—POUNDS PER HOUR

Inlet Pressure	Outlet Pressure	Valve Size ½"	¾"	1"	1¼"	1½"	2"	2½"	3"	4"	6"	8"
30	2-10	130	232	432	596	1160	2030	3000	4400	7700	17800	34000
50	5-20	130	344	616	872	1600	2900	4200	6200	10800	26200	48000
	30	178	320	568	768	1500	2600	4000	5700	10000	38500	44000
60	5-25	215	392	704	960	1850	3300	4800	7000	12000	29000	60000
	40	196	352	624	880	1650	2900	4400	6300	11000	24000	52000
75	5-30	260	480	840	1160	2200	4000	5900	8500	15000	33600	70000
	50	236	424	760	1040	2000	3600	5300	7700	13000	29000	63000
100	5-50	330	600	1080	1440	2800	5000	7400	11000	18500	42000	87000
	60	320	576	1040	1400	2700	4800	7200	10500	18000	40000	85000
	80	260	464	840	1120	2200	3900	5700	8300	14000	31000	67000
125	5-60	400	736	1320	1800	3500	6200	9100	13500	23000	49400	99000
	80	380	688	1240	1680	3300	5800	8500	12500	21500	48000	97000
	100	310	560	1024	1360	2700	4800	7000	10500	17500	39700	80000
150	5-70	486	880	1584	2080	4000	7200	11000	15500	27000	60000	122000
	100	450	800	1440	1960	3800	6700	10000	14500	25000	52000	115000
	125	350	608	1120	1520	2900	5200	7700	11000	19000	43000	91000
175	5-90	560	1000	1840	2480	4800	8500	12500	18000	31000	65000	140000
	100	540	984	1760	2400	4700	8200	12000	17500	33000	64000	135000
	125	480	880	1560	2080	4200	7400	11000	15800	27000	58000	123000
	150	370	680	1200	1680	3200	5700	8400	12000	21000	44000	95000
200	5-100	600	1120	2000	2800	5200	9500	14000	21000	35000	75500	162000
	125	590	1080	1920	2640	5000	9000	13000	19000	33000	75000	150000
	150	540	984	1760	2400	4700	8200	12000	17500	30000	64000	135000
	175	410	720	1280	1760	3400	6000	9000	13000	23000	49100	110000
225	5-120	680	1200	2200	3040	5800	10500	15000	22000	38000	82000	170000
	150	660	1160	2080	2880	5500	9800	14500	21000	37000	76000	160000
	175	570	1040	1840	2480	4800	8600	13000	18500	32000	66000	140000
	200	430	760	1360	1880	3600	6400	9500	14000	24000	52000	112000
*250	5-130	770	1440	2480	3360	6700	11800	17000	25000	43000	92000	200000
	150	760	1360	2400	3280	6400	11500	16500	24500	42000	90000	190000
	175	710	1280	2240	3040	6000	10500	15700	23000	39000	83000	180000
	200	610	1100	1960	2720	5100	9200	13500	20000	34000	78000	160000
	225	450	800	1440	1960	3800	6700	10000	14500	25000	59800	110000

For Superheated steam correct figures in table as follows:
50˚F. superheat multiply by .92
100˚F. superheat multiply by .85
150˚F. superheat multiply by .80
200˚F. superheat multiply by .75
300˚F. superheat multiply by .65

*Capacities for regulators at pressures higher than 250 psi as well as for larger sizes consult our engineering department.

MULTIPLIERS TO BE USED

Type of Valve	⅜"	½"	¾"	1"	1¼"	1½"	2"	2½"	3"	4"	6"	8"	10"
AA–AR		*	*	*	*	*	*	*	*	*	*	*	
114–114-R		*	*	*	*	*	*	*	*	*	*	*	*
116–116-R		*	*	*	*	*	*	*	*	*	*	*	*
118–118-R		.55	.55	.55	.55	.55	.55	.55	.55	.55	.55	.55	.55
119–119-R		.55	.55	.55	.55	.55	.55	.55	.55	.55	.55	.55	.55
11A		*	*	*	*	*	*						

*Use Table as shown

CAPACITIES OF PRESSURE REGULATORS FOR AIR

AIR—STANDARD CUBIC FEET PER MINUTE							
Inlet Pressure	Outlet Pressure	VALVE SIZE					
		½"	¾"	1"	1¼"	1½"	2"
30	2-10	44	80	145	195	385	675
50	5-20	65	115	205	290	535	965
	30	60	105	190	255	500	865
60	5-25	70	130	235	320	616	1100
	40	65	115	210	295	550	965
75	5-30	85	160	280	385	735	1330
	50	80	140	255	345	665	1200
100	5-50	110	200	360	480	935	1670
	60	105	190	345	465	900	1600
	80	85	155	280	375	735	1300
125	5-60	135	245	440	600	1170	2070
	80	125	230	415	560	1100	1930
	100	105	185	340	455	900	1600
150	5-70	160	295	530	695	1330	2400
	100	150	265	480	655	1270	2230
	125	115	200	375	505	965	1730
175	5-90	185	335	615	825	1600	2830
	100	180	325	585	800	1570	2730
	125	160	295	520	695	1400	2470
	150	125	225	400	560	1070	1900
200	5-100	200	375	665	935	1730	3170
	125	195	360	640	880	1670	3000
	150	180	325	585	800	1570	2730
	175	135	240	426	585	1130	2000
225	5-120	225	400	735	1010	1930	3500
	150	220	385	695	960	1830	3270
	175	190	345	615	825	1600	2870
	200	145	255	455	625	1200	2130
250	5-130	255	480	825	1120	2230	3930
	150	255	455	800	1090	2130	3830
	175	235	425	745	1010	2000	3500
	200	205	365	655	905	1700	3070
	225	150	265	480	655	1270	2230
275	5-140	288	506	930	1250	2430	4290
	175	275	480	880	1190	2310	4080
	200	250	445	815	1100	2130	3760
	225	215	385	700	945	1840	3240
300	5-150	315	555	1010	1360	2650	4670
	175	305	540	990	1130	2580	4560
	200	290	515	940	1270	2460	4350
	225	265	470	860	1160	2250	3970
*325	5-170	335	595	1090	1470	2850	5030
	200	325	575	1050	1420	2750	4850
	225	305	540	990	1340	2600	4590

*Capacities for Pressure Regulators at pressures higher than 325 psi, as well as for sizes larger than 2" available on request.
Air Capacities for valves 2½" and larger, use Table on page 16 and divide by 3.

TYPES 135, 145
BACK PRESSURE VALVES

Angle or Globe Pattern
Cup Disc Type
Steam, Air, Water, Oil Service

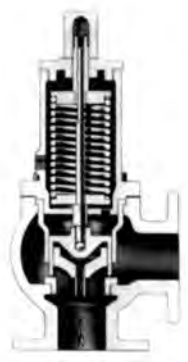

TYPE 135 ANGLE

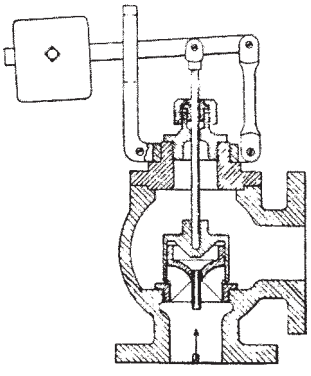

TYPE 145

CUP DISC, SEAT-BUSHING

Cup Disc back pressure and relief valves set a new standard in valve performance giving far greater capacity with closer regulation than is possible for conventional type valves. Type 135 is recommended for any clean fluid and for pressures from 5 psi up to the maximums listed below. Type 145 is offered for 0 to 15 psi.

Design and Operation: The inner valve is cup formed and slides over a stationary piston which is part of the seat bushing casting. The edge of the cup cuts across the outlets of the passages between the piston and seat to control the flow and pressure. Valve is normally closed.

Pressure from the valve inlet is transmitted by a short tube to the space above the piston where it tends to lift the cup against the spring force. As this tube faces upstream, the velocity head of the entering fluid is changed into additional pressure to lift the cup.The tube may extend outside the valve to transmit pressure from a remote point.

A close fitting sleeve surrounds the cup to prevent pressure in the outlet chamber from acting downward on the cup and raising the inlet pressure.

A vent in the spring housing prevents an accumulation of pressure above the disc.

Since there is always some fluid leakage between the sleeve and the cup, this vent connection should be piped back to the reservoir when liquids are used. The piping should be kept as short as possible to avoid pressure buildup above the cup.

When used as a relief valve without the sleeve and vent, the capacities are reduced as indicated in the table. The smoother and more chatter free characteristics of the cup construction are retained.

Although the spring can be designed for a wide range of adjustment, much better regulation results if the spring is specified and designed for a definite pressure with a moderate adjustment range. The cap locks the adjusting screw and prevents leakage.

Capacity: The outstanding advantage of this valve is its very large capacity with excellent regulation at all rates of flow. The size ordinarily is half the size required with other types.

Materials: Sizes 1½ inch and smaller have bronze body and trim. Larger sizes have cast iron body and bronze trim. Prices for valves made of other materials will be supplied on request.

TYPES 135 AND 145—DIMENSIONS—WEIGHTS (approximate)

Size Inches	Globe—F to F—Inches			Angle—Cen. to F—Inches			Maximum Inlet Pressure lbs./sq. in.	Shipping Weight			Cap. Factor	
	Screwed	Flanged 125#	Flanged 250#	Screwed	Flanged 125#	Flanged 250#		Screwed	Flanged 125#	Flanged 250#	with sleeve 5% rise	without sleeve 10% rise
¾	4¼	—	—	1 5/16	—	—	300	12	—	—	.16	.11
1	5	—	—	2 1/16	—	—	300	15	—	—	.27	.19
1¼	5⅛	—	—	2⅛	—	—	250	16	—	—	.48	.33
1½	5¼	—	—	2½	—	—	200	17	—	—	.64	.45
2	7 9/16	8¼	8¾	3 7/16	4⅛	4⅜	180	43	52	60	1.1	.77
2½	8¾	9½	10⅛	3 15/16	4¾	5 1/16	150	53	65	72	1.5	1.1
3	9¾	10½	11¼	4½	5¼	5⅝	140	73	85	100	2.4	1.7
4	—	12¼	12⅞	—	6⅛	6 7/16	125	—	120	140	4.4	3.1
5	—	14½	15⅝	—	7¼	7 11/16	100	—	170	195	6.4	4.5
6	—	16¼	17⅛	—	8⅛	8 9/16	90	—	200	235	8.8	6.1
8	—	19⅛	20⅛	—	9⅛	9⅝	80	—	350	380	16.0	11.0

KECKLEY COMPANY • 3400 Cleveland Street • P.O. Box 67 • Skokie, Illinois 60076

TYPES 135, 145
BACK PRESSURE VALVES

Capacity Table

The maximum capacity of any back pressure valve depends on its size and on the inlet and outlet pressures at the maximum rate of flow. The capacity depends also on the type and design of control mechanism. It is necessary to have all this information to figure the capacity accurately. Although a very large capacity can be obtained from any back pressure or relief valve if the inlet pressure rises enough, only the capacity obtainable with a moderate and safe pressure rise is important.

The capacities of valves in this bulletin are based on 10% rise or accumulation in inlet pressure above the set opening pressure, except Type 135 based on 5% rise.

Don't base your selection of valve size merely on size of pipe.

1. **To find Valve Capacity—Multiply Capacity Factor by Orifice Capacity.**
2. **To find Valve Size needed—Divide Required Capacity by Orifice Capacity to obtain Capacity Factor. Then use Table No. 1.**

Capacity Factors in Table No. 1 represent the capacity of each valve, with good regulation, as compared to the capacity of a standard orifice under the same conditions.

Orifice Capacities in Tables Nos. 2, 3, 4 and 5 are the rates of flow through a perfect (100% coefficient) orifice or nozzle of 1 sq. in. area for various combinations of inlet and outlet pressures.

Corrections for superheat and for fluids of different specific gravities are shown.

Maximum inlet temperature 450˚F.

Example: Find steam capacity of 3" Type 135 Inlet pressure 20 lbs. —Outlet 8 lbs. or lower. Capacity Factor = 2.4 (See Table No. 1). Orifice Capacity = 1,900 lbs. per hr. (Table No. 3). Valve Capacity = 2.4 x 1,900 = 4,560 lbs. per hr. steam.

table no. 1—capacity factors—valves

	⅜"	½"	¾"	1"	1¼"	1½"	2"	2½"	3"	4"	5"	6"	8"	10"	12"	14"
No. 135			.16	.27	.48	.64	1.1	1.5	2.4	4.4	6.4	8.8	16			

table no. 2—orifice capacities—high pressure steam

Outlet Pressure Lbs. per Square Inch Gage	Initial Gage Pressure—Lbs. per Square Inch							
	200	175	150	125	100	80	60	50
	Lbs. of Steam per Hour per Square Inch of Orifice							
125	10570	8820	6270					
100	10900	9580	7960	5640				
80	10900	9650	8400	6840	4620			
60	10900	9650	8400	7150	5720	4100		
50	10900	9650	8400	7150	5900	4670	2760	
40	10900	9650	8400	7150	5900	4900	3580	2550
30	10900	9650	8400	7150	5900	4900	3885	3225
25	10900	9650	8400	7150	5900	4900	3900	3360
20-0	10900	9650	8400	7150	5900	4900	3900	3400

If the steam is initially superheated multiply the above weights by
1—(0.00065 x degrees Fahr. superheat)

table no. 3—orifice capacities—low pressure steam

Outlet Pressure Lbs. per Square Inch Gage	Initial Gage Pressure—Lbs. per Square Inch							
	40	30	25	20	15	10	8	5
	Lbs. of Steam per Hour per Square Inch of Orifice							
30	2310							
25	2710	1575						
20	2840	2050	1480					
15	2900	2370	1930	1385				
10	2900	2400	2115	1780	1235			
8	2900	2400	2150	1900	1540	760		
5	2900	2400	2150	1900	1600	1110	860	
1	2900	2400	2150	1900	1600	1310	1075	915
O-Vac.	2900	2400	2150	1900	1600	1330	1210	985

If the steam is initially superheated multiply the above weights by
1—(0.00065 x degrees Fahr. superheat)

table no. 4—orifice capacities for air

Outlet Pressure Lbs. per Square Inch Gage	Initial Gage Pressure—Lbs. per Square Inch									
	100	90	80	70	60	50	40	30	20	10
	Cu. Ft. per Min. of Free Air (60˚F.—14.7#/sq. in.) per Sq. In.									
70	1886	1535	1100							
60	2035	1770	1453	1023						
50	2090	1880	1643	1355	958					
40	2100	1913	1725	1505	1235	881				
35	2100	1913	1735	1530	1317	1025	590			
30	2100	1913	1735	1550	1350	1120	802			
25	2100	1913	1735	1550	1370	1165	910	533		
20	2100	1913	1735	1550	1370	1185	978	696		
15	2100	1913	1735	1550	1370	1185	1002	812	460	
10	2100	1913	1735	1550	1370	1185	1002	815	580	
5	2100	1913	1735	1550	1370	1185	1002	818	635	375
0	2100	1913	1735	1550	1370	1185	1002	818	635	446

For other gases, divide above CFM by $\sqrt{\text{specific gravity of the gas}}$.

table no. 5—orifice capacities for water

	Pressure Drop through Orifice—Lbs. per Square Inch											
Pressure Drop	100	85	70	60	50	40	30	25	20	15	10	5
GPM per Square Inch	380	350	318	294	269	240	208	190	170	147	120	85

For other liquids, divide above GPM by $\sqrt{\text{specific gravity of the liquid}}$.

TYPE 40 — A.S.M.E. STANDARD — STEAM OR AIR
TYPE 41 — A.S.M.E. STANDARD — STEAM OR AIR
TYPES 42, 43, 44 — LIQUIDS • SAFETY AND RELIEF VALVES

Bronze Body
Bronze or Stainless Steel Trim

Type 40 (side outlet) and Type 41 (top outlet) Bronze Pop Safety Valves

Pressure Settings:
Steam to 250 psi 406˚F.
Air/Gas to 300 psi 300˚F.

Consult factory regarding stainless steel trim for higher pressure settings. These valves meet A.S.M.E. requirements and are NB Certified. Regulators and pressure adjustment screws are both sealed after final tests before shipment.

Recommended for installation on, or protection of steam boilers, generators, unfired pressure vessels, line pressure reducing valves, etc. Sizes ½" through 2½". For larger sizes, consult factory.

Types 42, 43, 44 (Liquids) Bronze Relief Valves: These RELIEF VALVES are furnished for any service where the pressure media does not attack bronze and the temperature is not higher than 406˚F. and maximum pressure not higher than 300 psi designed for protection against overpressure in pumps, pipe lines, tanks, etc.

Constructed of bronze with stainless steel spindle. Springs adjustable ±5 psi above or below the set pressure.

Type 42 is standard for use where set pressure is fairly constant. Special locking caps are available at additional cost.

Type 43 is standard with handwheel for ease in changing the set pressure.

Type 44 has lifting lever required for some applications where inspection tests are advisable to show valve is operative.

DATA REQUIRED WHEN ORDERING:
Size
Orifice
Set pressure
Media
Capacity
3% or 10% accumulation

Lbs./Hour Steam, 90% basis, 3% Accumulation: The capacities shown on page 21 are for saturated steam and apply to valves for use on power boilers in accordance with current A.S.M.E. Code, Section 1.

Lbs./Hour Steam, 90% basis, 10% Accumulation: The capacities shown on page 21 are for saturated steam and are in accordance with A.S.M.E. Unfired Pressure Vessel Code, Section VIII.

SAFETY VALVES

TYPE 40

TYPE 41

SCFM Air, 10% Accumulation: The capacities shown on page 21 are for air service.

RELIEF VALVES

TYPE 42

TYPE 43

TYPE 44

In all the designs, the outlet opening is in the base casting. This makes it unnecessary to break the connection to take valve apart for cleaning. Size ½" through 3".

CAPACITIES IN GALLONS OF WATER PER MINUTE AT 25% OVERPRESSURE

TYPES 42, 43, 44 RELIEF VALVES

Set Pressure Psig	½	¾	1	1¼	1½	2	2½	3
25	8	11	16	37	56	95	152	218
50	11	14.5	22.5	51	75	109	217	315
75	13	16	27	60	83	120	265	385
100	16	20	32.5	68	90	131	306	446
125	18	22.5	36	76	98	142	341	500
150	20	25	39	81	105	151.5	376	547
175	21.5	27	42	87	111.5	158	405	589
200	23	31	45	92	117	165	430	630
225	24	34	48	96	124	171.5	459	668
250	25	36.5	50.5	100	130	177	484	706
275	25.5	39	53	104	135.5	183	506	747
300	26	42	55	107.5	142	189	530	785

DIMENSIONS—WEIGHTS (approximate)

Size	A Type 42-43	A Type 44	B	C	Weight
½	5	5 7/16	1⅛	1 15/16	1
¾	6 9/16	7⅝	1 11/16	2¼	2
1	7⅛	8⅜	2 1/16	2 11/16	4
1¼	8¾	9¾	2 3/16	3	6
1½	9½	10 9/16	2½	3⅝	8
2	9 13/16	10⅞	2 13/16	3 11/16	11
2½	10	13 3/16	3	3⅞	16
3	12⅜	14	3⅞	4⅝	25

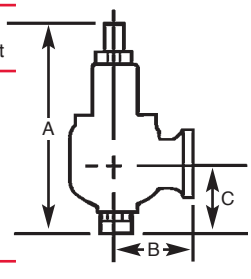

KECKLEY COMPANY • 3400 Cleveland Street • P.O. Box 67 • Skokie, Illinois 60076

KECKLEY

STEAM/AIR CAPACITIES—TYPES 40 AND 41

To correct capacities for superheat or temperature other than 60˚F, consult factory.

Orifice	D			E			F			G			H			J		
Area	.121 Sq. In.			.216 Sq. In.			.338 Sq. In.			.554 Sq. In.			.863 Sq. In.			1.414 Sq. In.		
Set Press. PSIG	Lbs./Hr. Steam 3% Acc.	Lbs./Hr. Steam 10% Acc.	SCFM Air 10% Acc.	Lbs./Hr. Steam 3% Acc.	Lbs./Hr. Steam 10% Acc.	SCFM Air 10% Acc.	Lbs./Hr. Steam 3% Acc.	Lbs./Hr. Steam 10% Acc.	SCFM Air 10% Acc.	Lbs./Hr. Steam 3% Acc.	Lbs./Hr. Steam 10% Acc.	SCFM Air 10% Acc.	Lbs./Hr. Steam 3% Acc.	Lbs./Hr. Steam 10% Acc.	SCFM Air 10% Acc.	Lbs./Hr. Steam 3% Acc.	Lbs./Hr. Steam 10% Acc.	SCFM Air 10% Acc.
10	133	152	54	237	271	96	371	423	151	607	694	247	946	1081	385	1550	1771	630
15	157	179	64	281	319	114	440	500	178	721	819	292	1123	1276	454	1840	2091	744
20	182	206	73	325	368	131	509	576	205	835	944	336	1300	1471	524	2131	2410	858
25	207	234	83	370	417	148	579	653	232	948	1070	381	1478	1666	593	2421	2730	972
30	232	261	93	414	466	166	648	729	259	1062	1195	425	1655	1861	663	2711	3050	1086
35	257	291	104	458	520	185	717	813	289	1176	1333	474	1832	2076	739	3001	3401	1211
40	282	321	114	503	573	204	787	897	319	1290	1470	523	2009	2291	815	3292	3753	1336
45	307	351	125	547	627	223	856	981	349	1403	1608	572	2186	2505	892	3582	4105	1461
50	331	381	136	592	681	242	926	1065	379	1517	1746	621	2363	2720	968	3872	4456	1586
55	356	411	146	636	734	261	995	1149	409	1631	1884	671	2540	2934	1045	4163	4808	1711
60	381	442	157	680	788	281	1064	1233	439	1745	2022	720	2718	3149	1121	4453	5160	1837
65	406	472	168	725	842	300	1134	1317	469	1858	2159	769	2895	3364	1197	4743	5511	1962
70	431	502	179	770	896	319	1205	1401	499	1974	2297	818	3076	3578	1274	5039	5863	2087
75	457	532	189	815	949	338	1276	1486	529	2091	2435	867	3258	3793	1350	5338	6215	2212
80	482	562	200	861	1003	357	1347	1570	559	2209	2573	916	3440	4008	1426	5637	6566	2337
85	508	592	211	907	1057	376	1419	1654	589	2326	2710	965	3623	4222	1503	5936	6918	2462
90	534	622	221	952	1110	395	1490	1738	619	2443	2848	1014	3805	4437	1579	6235	7270	2588
95	559	652	232	998	1164	414	1562	1822	648	2560	2986	1063	3988	4651	1656	6534	7621	2713
100	585	682	243	1044	1218	434	1633	1906	678	2677	3124	1112	4170	4866	1732	6833	7973	2838
105	610	712	254	1089	1272	453	1705	1990	708	2794	3262	1161	4353	5081	1808	7132	8325	2963
110	636	742	264	1135	1325	472	1776	2074	738	2911	3399	1210	4535	5295	1885	7431	8676	3088
115	661	773	275	1181	1379	491	1848	2158	768	3029	3537	1259	4718	5510	1961	7730	9028	3213
120	687	803	286	1226	1433	510	1919	2242	798	3146	3675	1308	4900	5725	2038	8029	9380	3339
125	713	833	296	1272	1487	529	1991	2326	828	3263	3813	1357	5083	5939	2114	8328	9731	3464
130	738	863	307	1318	1540	548	2062	2410	858	3380	3950	1406	5265	6154	2190	8627	10080	3589
135	764	893	318	1364	1594	567	2134	2494	888	3497	4088	1455	5448	6368	2267	8926	10430	3714
140	789	923	329	1409	1648	586	2205	2578	918	3614	4226	1504	5630	6583	2343	9225	10780	3839
145	815	953	339	1455	1701	606	2277	2662	948	3731	4364	1553	5813	6798	2420	9524	11130	3964
150	841	983	350	1501	1755	625	2348	2746	978	3849	4502	1602	5995	7012	2496	9823	11480	4090
160	892	1043	371	1592	1863	663	2491	2915	1037	4083	4777	1700	6360	7442	2649	10420	12190	4340
170	943	1104	393	1683	1970	701	2634	3083	1097	4317	5053	1798	6725	7871	2802	11010	12890	4590
180	994	1164	414	1775	2077	739	2777	3251	1157	4551	5328	1897	7090	8300	2954	11610	13590	4841
190	1045	1224	436	1866	2185	778	2920	3419	1217	4786	5604	1995	7455	8729	3107	12210	14300	5091
200	1096	1284	457	1957	2292	816	3063	3587	1277	5020	5879	2093	7820	9159	3260	12810	15000	5341
210	1148	1344	478	2049	2400	854	3206	3755	1337	5254	6155	2191	8185	9588	3413	13410	15700	5592
220	1199	1404	500	2140	2507	892	3349	3923	1396	5489	6430	2289	8550	10010	3565	14000	16410	5842
230	1250	1465	521	2231	2615	931	3492	4091	1456	5723	6706	2387	8915	10440	3718	14600	17110	6092
240	1301	1525	543	2323	2722	969	3634	4259	1516	5957	6981	2485	9280	10870	3871	15200	17810	6343
250	1352	1585	564	2414	2829	1007	3777	4428	1576	6191	7257	2583	9645	11300	4024	15800	18520	6593
260	1403	1645	586	2505	2937	1045	3920	4596	1636	6426	7533	2681	10000	11730	4177	16400	19220	6843
270	1455	1705	607	2597	3044	1084	4063	4764	1696	6660	7808	2779	10370	12160	4329	16990	19920	7094
280	1506	1766	628	2688	3152	1122	4206	4932	1755	6894	8084	2877	10730	12590	4482	17590	20630	7344
290	1557	1826	650	2779	3259	1160	4349	5100	1815	7128	8359	2975	11100	13020	4635	18190	21330	7594
300	1608	1886	671	2871	3367	1198	4492	5268	1875	7363	8635	3073	11460	13450	4788	18790	22030	7845
Approx. 1 PSIG Increments																		
	5	6	2	9	11	4	14	17	6	24	28	10	37	43	15	60	70	25
Approx. 5 PSIG Increments																		
	25	30	11	46	54	19	72	84	30	118	138	49	183	215	77	299	350	125
Approx. 10 PSIG Increments																		
	51	60	21	92	107	38	143	168	60	235	275	98	365	430	153	598	700	250

Valves set under 15 PSIG are not stamped with A.S.M.E. Code Symbol stamp.

DIMENSIONS • WEIGHTS (approximate) • TYPES 40 AND 41

Type	Inlet Male NPT	Orifice	Outlet Female NPT	A	B	C	Weight
40	½	D	¾	6½	1⅝	2⅛	1½
40	¾	D	¾	6½	1⅝	2⅛	1¾
41	½	D	—	6½	—	—	1¼
40	¾	E	1	7½	1¾	2⅜	2½
40	1	E	1	7⅝	1¾	2½	2¾
41	¾	E	—	7½	—	—	2¼
40	1	F	1¼	8½	2	2⅝	3½
40	1¼	F	1¼	8¾	2	2⅞	3¾
41	1	F	—	8½	—	—	3¼

Type	Inlet Male NPT	Orifice	Outlet Female NPT	A	B	C	Weight
40	1¼	G	1½	9⅝	2⅜	3⅛	5½
40	1½	G	1½	10	2⅜	3⅜	5¾
41	1¼	G	—	9⅝	—	—	5
40	1½	H	2	10⅝	2¾	3⅝	7¾
40	2	H	2	11⅛	2¾	4⅛	8
41	1½	H	—	10⅝	—	—	7¼
40	2	J	2½	13⅝	3⅜	4¼	15½
40	2½	J	2½	14	3⅜	4½	15¾
41	2	J	—	13⅝	—	—	15

Model 40-S available only ½" x ¾", ¾" x 1", 1" x 1¼", 1¼ x 1½", 1½" x 2", and 2" x 2½".

TYPE 301 — CAST IRON BODY, STAINLESS STEEL TRIM (SEMI-NOZZLE)
TYPE 401 — CAST STEEL BODY, STAINLESS STEEL TRIM (FULL NOZZLE)
TYPE 402 — CAST STEEL BODY, STAINLESS STEEL TRIM (FULL NOZZLE)
SAFETY VALVES

Steam, Air, Non-Hazardous Gas Service

TYPE 301

Pressure & Temperature Limits:

Type 301	250 psig–406˚F.
Type 401	505 psig–750˚F.
Type 402	1000 psig[1]–750˚F.

Applications:

- Steam boilers and generators
- Pressure reducing stations
- Air/gas compressors–reciprocating or rotary
- Pressure vessels–including tanks, receivers, intercoolers, oil-gas separators, lines.

Features: Type 301:

Heavy duty construction of high quality cast iron with stainless steel semi-nozzle trim. Bolted bonnet design for easy maintenance. Seats lapped to optical flatness. Dual control rings offer easy adjustability for precision opening with minimum preopen or simmer and exact blow-down control. Heavy duty lift lever assembly. Every valve 100% tested/inspected for pressure setting, blow-down and leakage. All adjustments are factory sealed to prevent tampering or dis-assembly.

Type 301—Cast iron. Enclosed spring. Stainless steel trim. ANSI 250# inlet flange and ANSI 125# outlet flange.

Features: Type 401–402:

Heavy duty construction of high quality cast steel with stainless steel full-nozzle trim. Steel yoke incorporates a cover-shield for guiding surfaces and provides for fully exposed spring. Other features are the same as the Type 301.

[1]Note: Maximum set pressure for Type 402—

F thru M orifice steam or air	1000 psig
N and P orifice	750 psig
Q orifice	600 psig

Type 401—Cast steel. Exposed spring. Full nozzle with stainless steel trim. ANSI 300# inlet flange and 150# outlet flange.

Type 402—Same as Type 401 except ANSI 600# inlet flange and 150# outlet flange.

Available:
Drip Pan Elbows, page 15

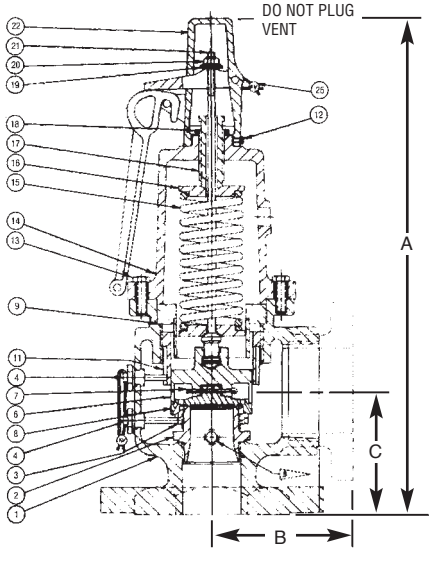

TYPE 301

PARTS AND MATERIALS —TYPE 301

No.	Part Name	Material	No.	Part Name	Material
1	Body	Iron	15	Spring	Steel Plated
2	Semi-Nozzle	Stainless Steel	16	Step-Spring	Steel Plated
3	Warn Ring	Bronze	17	Screw–Compression	Brass
4	Warn Ring Pin/Guide Pin	Brass	18	Lock Nut (Comp. Screw)	Steel Plated
6	Disc Holder	Bronze	19	Lifting Disc	Steel
7	Cotter Pin (Disc)	Stainless Steel	20	Nut (Lifting Disc)	Steel
8	Disc	Stainless Steel	21	Stem	Steel Plated
9	Lift Stop[1]	Steel	22	Cad Assembly	Iron
11	Guide	Bronze	22A	Lever	Iron
12	Screw (Cap)	Steel Plated	22B	Yoke (Lift)	Iron
13	Bolt (Body)	Steel Plated	22C	Pins (Lever/Lift Yoke)	Steel
14	Bonnet	Iron	25	Seal	Lead & Wire

[1]Lift Stop furnished in Low Pressure Valves only.

KECKLEY COMPANY • 3400 Cleveland Street • P.O. Box 67 • Skokie, Illinois 60076

KECKLEY

STEAM/AIR CAPACITIES—TYPES 301

To correct capacities for superheat or temperature other than 60˚F, consult factory ASME Standard-N.B. Certified

Orifice	J			K			L			M			N			P			Q			R		
Area	1.287 Sq. In.			1.838 Sq. In.			2.853 Sq. In.			3.60 Sq. In.			4.34 Sq. In.			6.38 Sq. In.			11.05 Sq. In.			16.0 Sq. In.		
Set Press. PSIG	Lbs./Hr. Steam 3% Acc.	Lbs./Hr. Steam 10% Acc.	SCFM Air 10% Acc.	Lbs./Hr. Steam 3% Acc.	Lbs./Hr. Steam 10% Acc.	SCFM Air 10% Acc.	Lbs./Hr. Steam 3% Acc.	Lbs./Hr. Steam 10% Acc.	SCFM Air 10% Acc.	Lbs./Hr. Steam 3% Acc.	Lbs/Hr. Steam 10% Acc.	SCFM Air 10% Acc.	Lbs./Hr. Steam. 3% Acc.	Lbs./Hr. Steam 10% Acc.	SCFM Air 10% Acc.	Lbs./Hr. Steam 3% Acc.	Lbs./Hr. Steam 10% Acc.	SCFM Air 10% Acc.	Lbs./Hr. Steam 3% Acc.	Lbs./Hr. Steam 10% Acc.	SCFM Air 10% Acc.	Lbs./Hr. Steam 3% Acc.	Lbs./Hr. Steam 10% Acc.	SCFM Air 10% Acc.
10	1453	1691	602	2077	2390	851	3220	3708	1320	4063	4697	1672	4898	5634	2005	7201	8289	2951	12466	14408	5128	17951	20886	7434
15	1752	1996	710	2505	2821	1004	3883	4378	1558	4900	5545	1974	5908	6651	2367	8684	9786	3483	15034	17008	6054	21648	24656	8776
20	2051	2301	819	2932	3253	1158	4547	5047	1796	5737	6393	2276	6917	7668	2729	10168	11282	4016	17602	19609	6960	25346	28426	10118
25	2350	2607	928	3360	3684	1311	5210	5716	2035	6574	7241	2577	7926	8685	3091	11651	12778	454B	20171	22209	7905	29044	32196	11460
30	2650	2912	1036	3788	4116	1465	5874	6386	2273	7411	8089	2879	8935	9702	3453	13135	14274	5081	22739	24810	8831	32742	35966	12802
35	2949	3247	1156	4216	4590	1634	6537	7122	2535	8248	9022	3211	9944	10821	3852	14618	15920	5667	25307	27671	9849	36440	40113	14278
40	3248	3583	1275	4644	5065	1803	7200	7858	2797	9085	9955	3543	10953	11940	4250	16101	17566	6253	27875	30532	10867	40138	44260	15754
45	3547	3919	1395	5071	5539	1972	7864	8594	3059	9922	10887	3875	11962	13058	4648	17585	19212	6838	30443	33392	11886	43835	48407	17230
50	3847	4255	1514	5499	6014	2141	8527	9331	3321	10760	11820	4207	12971	14177	5046	19068	20858	7424	33011	36253	12904	47533	52554	18706
60	4445	4926	1753	6355	6963	2478	9854	10803	3845	12434	13685	4871	14989	16414	5843	22035	24150	8596	38147	41974	14940	54929	60848	21658
70	5043	5598	1992	7211	7912	2816	11180	12276	4369	14108	15551	5535	17008	18652	6639	25002	27442	9768	43283	47696	16977	62324	69142	24611
75	5343	5933	2112	7638	8387	2985	11844	13012	4632	14945	16484	5867	18017	19771	7037	26485	29088	10353	45851	50556	17995	66022	73289	26087
80	5642	6269	2231	8066	8861	3154	12507	13748	4894	15782	17416	6199	19026	20889	7435	27969	30733	10939	48419	53417	19013	69720	77436	27563
90	6240	6941	2470	8922	9810	3492	13834	15221	5418	17456	19282	6863	21044	23127	8232	30936	34025	12111	53555	59139	21050	77116	85730	30515
100	6839	7612	2709	9777	10759	3830	15160	16694	5942	19130	21147	7527	23062	25364	9028	33902	37317	13283	58691	64860	23086	84511	94025	33467
110	7437	8284	2948	10633	11708	4168	16487	18166	6466	20804	23012	8191	25080	27602	9825	36869	40609	14454	63828	70581	25123	91907	102319	36419
120	8036	8955	3187	11489	12658	4505	17814	19639	6990	22478	24878	8855	27098	29839	10621	39836	43901	15626	68964	76303	27159	99303	110613	39372
125	8335	9291	3307	11917	13132	4674	18477	20375	7252	23315	25811	9187	28108	30958	11019	41319	45547	16212	71532	79164	28178	103001	114760	40848
130	8634	9626	3426	12344	13607	4843	19140	21111	7514	24152	26743	9519	29117	32076	11417	42803	47192	16798	74100	82024	29196	106698	118907	42324
140	9233	10298	3665	13200	14556	5181	20467	22585	8039	25826	28609	10183	31135	34314	12214	45770	50484	17969	79236	87746	31232	114094	127201	45276
150	9831	10969	3904	14056	15505	5519	21794	24056	8563	27500	30474	10847	33153	36551	13010	48736	53776	19141	84372	93467	33269	121490	135495	48228
160	10430	11641	4143	14911	16454	5857	23121	25529	9087	29174	32340	11511	35171	38789	13806	51703	57068	20313	89508	99189	35305	128885	143789	51180
170	11028	12312	4382	15767	17403	6194	24447	27002	9611	30848	34205	12175	37189	41026	14603	54670	60360	21485	94644	104910	37342	136281	152083	54133
175	11328	12648	4502	16195	17878	6363	25111	27738	9873	31685	35138	12507	38198	42145	15001	56153	62006	22070	97212	107771	38360	139979	156230	55609
180	11627	12984	4621	16623	18352	6532	25774	28474	10135	32522	36070	12839	39208	43263	15399	57637	63651	22656	99780	110631	39378	143677	160377	57085
190	12225	13655	4860	17478	19301	6870	27101	29947	10659	34196	37936	13503	41226	45501	16196	60604	66943	23828	104917	116353	41415	151072	168671	60037
200	12824	14327	5099	18334	20250	7208	28427	31419	11183	35870	39801	14167	43244	47738	16992	63570	70235	25000	110053	122074	43451	158468	176965	62989
210	13422	14998	5338	19189	21199	7546	29754	32892	11708	37545	41667	14831	45262	49976	17788	66537	73527	26171	115189	127796	45488	165864	185259	65941
220	14021	15670	5578	20045	22149	7884	31081	34364	12232	39219	43532	15495	47280	52213	18585	69504	76819	27343	120325	133517	47524	173259	193553	69894
225	14320	16005	5697	20473	22623	8052	31744	35101	12494	40056	44465	15827	48289	53332	18983	70988	78465	27929	122893	136378	48543	176957	197700	70370
230	14619	16341	5817	20901	23098	8221	32407	35837	12756	40893	45398	16159	49298	54450	19381	72471	80110	28515	125461	139238	49561	180655	201847	71846
240	15218	17013	6056	21756	24047	8559	33734	37310	13280	42567	47263	16823	51317	56688	20178	75438	83402	29686	130597	144960	51597	188050	210141	74798
250	15816	17684	6295	22612	24996	8897	35061	38782	13804	44241	49128	17487	53335	58925	20974	78405	86694	30858	135733	150681	53634	195446	218435	77750

DIMENSIONS—WEIGHTS (approximate) • TYPE 301

Inlet[1]	Orifice	Outlet[2]	A	B	C	Shipping Weight
1½" F.P.T.	J	2½" F.P.T.	18¼	3½	4¼	28
1½" FLG.	J	2½" F.P.T.	18¼	3½	4¼	30
2" FLG.	J	2½" F.P.T.	18¼	3½	4¼	33
2½" FLG.	J	2½" F.P.T.	18¼	3½	4¼	36
2" F.P.T	K	3" F.P.T.	19⅛	4	4⅝	46
2" FLG.	K	3" F.P.T.	19⅛	4	4⅝	51
2½" FLG.	K	3" F.P.T.	19⅛	4	4⅝	54
3" FLG.	K	3" F.P.T.	19⅛	4	4⅝	58
2½" F.P.T.	L	4" F.P.T.	22	4⅞	5½	70
2½" FLG.	L	4" F.P.T.	22	4⅞	5½	76
3" FLG.	L	4" F.P.T.	22	4⅞	5½	79
4" FLG.	L	4" F.P.T.	22	4⅞	5½	81
3" F.P.T.	M	4" F.P.T.	22¼	5⅛	5⅝	90
3" FLG.	M	4" F.P.T.	22¼	5⅛	5⅝	96
4" FLG.	M	4" F.P.T.	22¼	5⅛	5⅝	100
4" FLG.	N	6" FLG.	23	7¼	6¾	150
4" FLG.	P	6" FLG.	26¼	7¼	6¾	176
6" FLG.	Q	8" FLG.	36⅜	9¼	9¼	325
6" FLG.	R	8" FLG.	42⅞	10	10½	375

[1]Inlet Flanges are ANSI B16.1-250#.
[2]Outlet Flanges are ANSI B16.1-125#.

For Cast Steel dimensional data, consult factory.

KECKLEY COMPANY • 3400 Cleveland Street • P.O. Box 67 • Skokie, Illinois 60076

06/11 *Printed in U.S.A.*